Gaithersburg
A CHARACTER COUNTS! CITY

PLANNING AND CODE ADMINISTRATION

City of Gaithersburg · 31 South Summit Avenue · Gaithersburg, Maryland 20877 · Telephone: (301) 258-6330 · Fax: (301) 258-6336
plancode@gaithersburgmd.gov · www.gaithersburgmd.gov

AMENDMENT TO FINAL SITE OR SCHEMATIC DEVELOPMENT PLAN APPLICATION

SUBJECT PROPERTY

Street Address 188 Kentlands Boulevard, Gaithersburg Previous Project Number SDP-7-1

APPLICANT/BILLING CONTACT

Business Name Beatty Management Company, Inc.

Primary Contact Ken Miller

Street Address 6824 Elm Street Suite No. 200

City McLean State VA Zip Code 22101

Telephone Numbers: Work 703.821.0500 Cell 571.395.8013 E-mail Address kmiller@beattycos.com

OWNER

Business Name Beatty Management Company, Inc.

Primary Contact Ken Miller

Street Address 6824 Elm Street Suite No. 200

City McLean State Virginia Zip Code 22101

Telephone Numbers: Work (703) 821-0500 Cell (571) 395-8013 E-mail Address kmiller@beattycos.com

DEVELOPER

Business Name Beatty Management Company, Inc.

Primary Contact Ken Miller

Street Address 6824 Elm Street, Suite 200

City McLean State Virginia

Telephone Numbers: Work (703) 821-0500 Cell (571) 395-8013 E-mail Address kmiller@beattycos.com

ATTORNEY

Business Name Linowes and Blocher LLP

Primary Contact Erin E. Girard

Street Address 7200 Wisconsin Avenue, Suite 800

City Bethesda State Maryland

Telephone Numbers: Work (301) 961-5153 Cell (240) 678-4724 E-mail Address egirard@linowes-law.com

ARCHITECT

Business Name _____ MD Registration No. _____

Primary Contact _____

Street Address _____ Suite No. _____

City _____ State _____ Zip Code _____

Telephone Numbers: Work _____ Cell _____ E-mail Address _____

Joint Hearing - MCC & PC
ASDP-6950-2015
Exhibit 1

ENGINEER

Business Name Rodgers Consulting MD Registration No. 13970

Primary Contact Gary Unterberg

Street Address 19847 Century Boulevard Suite No. 200

City Germantown State Maryland Zip Code 20874

Telephone Numbers: Work (301) 948-4700 Cell (301) 873-4858 E-mail Address gunterberg@rodgers.com

APPLICATION TYPE (check one only) ☐ Amend Final Site Plan ☒ Amend Schematic Development Plan

PROPOSED PRIMARY USE (check one only) ☐ Residential ☒ Non-Residential ☐ Mixed Use

PROPOSED UNIT TYPE ☐ Residential Single Family ☐ Residential Multi-Family ☐ Office/Professional ☐ Mixed Use ☐ Restaurant ☒ Retail/Commercial ☐ Other Use

PARKING ☒ Parking Waiver Needed No. of Spaces Required ____ No. of Spaces Waived 28

☐ Height Waiver Needed *Waiver is a reduction of previous waiver granted by City for 37 spaces.

SITE PLAN NUMBER TO AMEND ____

USE ***(Amendment to Schematic Development Plan only)***

☒ Change in Use ☐ No Change in Use ☐ Change Other than to Use

PROJECT DESCRIPTION

SITE DETAILS

Site Area Square Feet		Number of Lots	
Site Area Acres		Number of Dwelling Units/Acre	
Green Area		Parking Spaces Provided	23
Green Area %		Height of Tallest Building (ft.)	
		Height of Tallest Building (stories)	

SQUARE FOOTAGE - NON-RESIDENTIAL

Retail		Office/Professional	5286
Restaurant (A)		Educational/Institutional/Religious	1263
Restaurant (B)		Industrial	
Restaurant (C)		Other *(please specify)*	

UNIT COUNTS - RESIDENTIAL

Single Family Detached Units		Apartment Units	
Townhouse Units		Condominium Units	
Duplex Units		Other *(please specify)*	

Total Number Residential Units 0

See Next Page for Submittal Requirements

SUBMISSION REQUIREMENTS - Amendment to Final Site Plan (see Site Plan Checklist at www.gaithersburgmd.gov (Documents & Forms)

SUBMISSION REQUIREMENTS - MXD Zone *or* CD Zone Schematic Development with Change in Use

- [X] Statement of Proposed Change
- [ ] Concept Stormwater Management Plan, One (1) hard copy, One (1) digital copy (DWF preferred) or PDF
- [ ] Approved NRI and FSD Plans, One (1) hard copy, One (1) digital copy (DWF preferred) or PDF
- [X] Traffic Impact Study
- [X] Proof of APFO Compliance
- [ ] Green Building Checklist
- [ ] Preliminary Forest Conservation Plan, One (1) hard copy, One (1) digital copy (DWF preferred) or PDF
- [X] Site, Architectural and Detail Plans, One (1) hard copy, One (1) digital copy (DWF preferred) or PDF
- [X] Statement of Master Plan Compliance
- [ ] Modified Staging or Phasing Plan, One (1) hard copy, One (1) digital copy (DWF preferred) or PDF *(optional)*
- [ ] Modified Covenant or Other Agreement *(optional)*
- [ ] Preliminary Affordable Housing Plan *(optional)*
- [ ] Preliminary Stormwater Management Plans, One (1) hard copy, One (1) digital copy (DWF preferred) or PDF *(optional)*
- [ ] Final Traffic Impact Study *(optional)*

SUBMISSION REQUIREMENTS - CD Zone - Concept Plan Change in Use

- [ ] Statement of Proposed Change
- [ ] Preliminary Forest Conservation Plan, One (1) hard copy, One (1) digital copy (DWF preferred) or PDF
- [ ] Site, Architectural and Detail Plans, One (1) hard copy, One (1) digital copy (DWF preferred) or PDF
- [ ] Concept Stormwater Management Plan, One (1) hard copy, One (1) digital copy (DWF preferred) or PDF *(optional)*
- [ ] Approved NRI and FSD Plans, One (1) hard copy, One (1) digital copy (DWF preferred) or PDF *(optional)*
- [ ] Traffic Impact Study *(optional)*
- [ ] Proof of APFO Compliance *(optional)*
- [ ] Green Building Checklist *(optional)*

SUBMISSION REQUIREMENTS - CD Zone - Concept Plan Change Other Than to Use

- [ ] Statement of Proposed Change
- [ ] Site, Architectural and Detail Plans, One (1) hard copy, One (1) digital copy (DWF preferred) or PDF
- [ ] Concept Stormwater Management Plan, One (1) hard copy, One (1) digital copy (DWF preferred) or PDF *(optional)*
- [ ] Approved NRI and FSD Plans, One (1) hard copy, One (1) digital copy (DWF preferred) or PDF *(optional)*
- [ ] Traffic Impact Study *(optional)*
- [ ] Proof of APFO Compliance *(optional)*
- [ ] Green Building Checklist *(optional)*

SUBMISSION REQUIREMENTS - CD Zone - Schematic Development Plan Change Other Than to Use

- [ ] Statement of Proposed Change
- [ ] Site, Architectural and Detail Plans, One (1) hard copy, One (1) digital copy (DWF preferred) or PDF
- [ ] Statement of Master Plan Compliance
- [ ] Preliminary Affordable Housing Plan *(optional)*
- [ ] Preliminary Stormwater Management Plans, One (1) hard copy, One (1) digital copy (DWF preferred) or PDF *(optional)*
- [ ] Final Traffic Impact Study *(optional)*
- [ ] Modified Staging or Phasing Plan, One (1) hard copy, One (1) digital copy (DWF preferred) or PDF *(optional)*
- [ ] Modified Covenant or Other Agreement *(optional)*

LINOWES AND BLOCHER LLP
ATTORNEYS AT LAW

April 21, 2015

Erin E. Girard
egirard@linowes-law.com
301.961.5153

The Honorable Jud Ashman, Mayor
And Members of the Gaithersburg City Council
City of Gaithersburg
31 South Summit Avenue
Gaithersburg, MD 20877-2038

Re: Application for Amendment to Approved Schematic Development Plan SDP-04-002

Dear Mayor Ashman and Members of the City Council:

On behalf of our client, Beatty Management Company, Inc. ("Beatty"), the owner of Kentlands Market Square, the purpose of this letter is to request an amendment to SDP-04-002 ("SDP") to allow for up to 10% of the approved commercial space to be used for office and/ or educational uses, and to convert two standard parking spaces along Market Street, in front of Building C, into a single handicap space ("Amendment"). All other aspects of the SDP remain substantially unchanged.

The Amendment is necessary to accommodate new tenants in the center and address the need of a specific tenant to have better handicap access to its space. None of the proposed revisions impact the Council's findings for approval of the original SDP, as contained in Resolution R-86-97, a copy of which is attached, nor do they impact the Council's determinations that the SDP application met the required findings of Section 24-160D.10(b) of the Gaithersburg Zoning Ordinance. Additionally, the Amendment has no impact on the adequacy of the public facilities serving the project, as discussed more fully in the Statement of Adequate Public Facilities included in the application, and will reduce the required parking for the property. The parking requirements shown on the SDP plan reflect the all-commercial scenario, which would generate the highest parking demand of 1019 spaces. With the conversion of the two spaces to one handicap space, as described above, 1284 spaces would be provided. In the event that 10% of the uses were office and/ or education uses, required parking would be reduced to 994 spaces[1], with 1284 provided.

Pursuant to Section 24-198(c)(2)(c)(ii)(1) of the Gaithersburg Zoning Ordinance, we believe that the minor nature of the proposed revisions would allow for a courtesy review by the Mayor and

[1] This number could be reduced even further depending on the mix of educational uses included in the 10%; required parking for educational uses is 1/250 square feet as opposed to office, which is parked at 1/ 300 square feet.

Joint Hearing - MCC & PC
ASDP-6950-2015
Exhibit 2

Council and final action by the Planning Commission as part of the Planning's Commission review of an accompanying site plan amendment application.

Thank you for your consideration of this application. If you have any questions, or would like any additional information, please do not hesitate to contact me.

Very truly yours,

LINOWES AND BLOCHER LLP

Erin E. Girard

Enclosure

cc: Ken Miller
Gary Unterberg

LINOWES AND BLOCHER LLP
ATTORNEYS AT LAW

April 21, 2015

Erin E. Girard
egirard@linowes-law.com
301.961.5153

John Bauer, Chair
And Members of the Gaithersburg Planning Commission
City of Gaithersburg
31 South Summit Avenue
Gaithersburg, MD 20877-2038

Re: Application for Amendment to Approved Site Plan K-1084

Dear Chairman Bauer and Members of the Planning Commission:

On behalf of our client, Beatty Management Company, Inc. ("Beatty"), the owner of Kentlands Market Square, the purpose of this letter is to request an amendment to Site Plan K-1084 ("Site Plan") to allow for up to 10% of the approved commercial space to be used for office and/ or educational uses, and to convert two standard parking spaces along Market Street, in front of Building C, into a single handicap space ("Amendment"). All other aspects of the Site Plan remain substantially unchanged.

The Amendment is necessary to accommodate new tenants in the center and address the need of a specific tenant to have better handicap access to its space. None of the proposed revisions impact the Planning Commission's previous findings for approval of the Site Plan, nor do they impact the Planning Commission's determination that the Site Plan met the required findings of Section 24-170, *et seq*, of the Gaithersburg Zoning Ordinance. Additionally, the Amendment has no impact on the adequacy of the public facilities serving the project, as discussed more fully in the Statement of Adequate Public Facilities included in the application, and will reduce the required parking for the property. The parking requirements shown on the SDP plan reflect the all-commercial scenario, which would generate the highest parking demand of 1019 spaces. With the conversion of the two spaces to one handicap space, as described above, 1284 spaces would be provided. In the event that 10% of the uses were office and/ or education uses, required parking would be reduced to 994 spaces[1], with 1284 provided.

[1] This number could be reduced even further depending on the mix of educational uses included in the 10%; required parking for educational uses is 1/250 square feet as opposed to office, which is parked at 1/ 300 square feet.

Based on the foregoing, we believe that the amendment complies with the requirements of Section 24-170, *et seq.*, of the Gaithersburg Zoning Ordinance, and request that it be scheduled for final action by the Planning Commission in conjunction with an accompanying amendment to related Schematic Development Plan SDP-04-002.

Thank you for your consideration of this application. If you have any questions, or would like any additional information, please do not hesitate to contact me.

Very truly yours,

LINOWES AND BLOCHER LLP

Erin E. Girard

Enclosure

cc: Ken Miller
Gary Unterberg

City of Gaithersburg MARYLAND
OFFICE OF ECONOMIC DEVELOPMENT

MEMORANDUM

City of Gaithersburg

To: Greg Man

From: Sharon Disque

CC: Tom Lonergan, Martin Matsen

Date: 4/29/2015

Re: Kentlands Market Square Amendment - ASDP-6950-2015

Comments: Greg: Attached is information on the presence of professional office uses in comparable centers and below are comments from Economic Development staff.

- Applying a percentage to the total square feet of a shopping center affects the tenant mix among the in-line tenants. (See attached)
- The percentages proposed by Beatty for increased office and educational uses, when applied to Kentlands Market Square in-line spaces, would effectively allow that up to one-in-five of the smaller tenants be non-retail uses.
- Upon tenant turnover, anchor spaces are unlikely to be divided into smaller units due to characteristics of the buildings (ceiling height, mechanicals, dock access, etc.)
- Currently, the City has approximately 1.28 mm square feet of available office and medical space available, per CoStar. There is no shortage of space for these types of uses.
- The majority of comparable centers in the area have a lower proportion of in-line tenants which are non-retail.

Joint Hearing - MCC & PC
ASDP-6950-2015
Exhibit 3

Kentlands Market Square

SOURCE: CoStar

Property Detail	
GLA:	253,428 s.f.
Anchors:	
Whole Foods	35,868 s.f.
Kentlands Stadium 8	30,000 s.f.
Michael's	23,296 s.f.
former Bally's	23,000 s.f.
Pet Smart	18,741 s.f.
Total:	130,905 s.f.
Estimated In Line Space:	122,523 s.f.

Beatty Proposal				
GLA:		254,650 s.f.		
			Percent of In Line Space*:	
Office	10.00%	25,465 s.f.		20.78%
Education to be included with Office				
Total:	10.00%	25,465 s.f.	Total:	20.78%

*Calculated from CoStar GLA

Beatty Proposed Percentages Applied to In Line Space:	
Office	12,252 s.f.
Total:	12,252 s.f.

Other Centers

King Farm Village Center (90% leased)	
GLA:	101,060 s.f.
Anchor (Safeway)	53,754 s.f.
In Line	47,306 s.f.
Professional Services:	
Realtor	500 s.f.
State of the Art Dental	3,693 s.f.
Miracle Ear	1,040 s.f.
shopping center assoc	500 s.f.
H&R Block	1,500 s.f.
Total:	7,233 s.f.

Percent of In Line Occupied by Office: 15.29%

Kentlands Square Shopping Center (100% leased)

GLA:		372,589 s.f.
Anchor:		
	Giant Food	60,854 s.f.
	Kmart	104,230 s.f.
	Party City	11,146 s.f.
	Total:	176,230 s.f.
In Line:		196,359 s.f.
Professional Services:		
	Abraxus Group	500 s.f.
	Analitech Systems	500 s.f.
	Ben Manesh DDS	2,000 s.f.
	Conquest Security	500 s.f.
	Hawkins Electric Service	500 s.f.
	community foundation	500 s.f.
	JK Group	500 s.f.
	Susan King	500 s.f.
	Score Edicational Cente	1,736 s.f.
	Total:	7,236 s.f.

Percent of In Line Occupied by Office: 3.69%

Muddy Branch Square (98% leased)

GLA:	129,971 s.f.
Anchor (Giant Food)	52,706 s.f.
In Line	77,265 s.f.
Professional Services:	
Muddy Branch Dental	1,580 s.f.
Muddy Branch Vet	2,412 s.f.
Professional SportsCare	1,920 s.f.
Righttime Medical Care	7,000 s.f.
Urgent Care	3,000 s.f.
United Mu Do	500 s.f.
Total:	16,412 s.f.

Percent of In Line Occupied by Office: 21.24%

Gaithersburg Square (92% leased)

GLA:		220,903 s.f.
Anchor:		
Ashley Furniture		24,560 s.f.
Bed Bath & Beyond		30,694 s.f.
Ross Dress for Less		27,957 s.f.
	Total:	83,211 s.f.
In Line:		137,692 s.f.
Professional Services:		
Arnold I Malhmood, DD		899 s.f.
Federal Realty		1,717 s.f.
	Total:	2,616 s.f.

Percent of In Line Occupied by Office: 1.90%

KENTLANDS/LAKELANDS
MARKET SQUARE
SCHEMATIC DEVELOPMENT PLAN 7-1 AMENDMENT

△ UPDATE USE AND PARKING PER NEW CODE

PRELIMINARY NOT FOR CONSTRUCTION

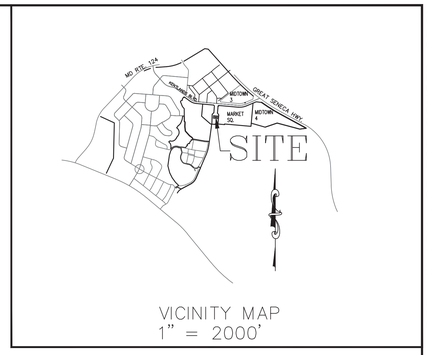

Parking Summary SDP 7-1
(June, 1997)

		USE AND RATIO	WIDTH	# UNITS/SQUARE FEET	REQUIRED W/ H.C.	PROVIDED W/ H.C. on street	off street	tandem	TOTAL
SECTION 4		Townhouses @ 2.5 per unit	8.5'	72	180	36	43	48	127
		Condominiums @ 2 per 2 B.R.	8.5'	120	240	37	98	98	233
		Townhouse office @ 1 per 300 sf	8.5'	15	100	12	75	0	87
Subtotal				**207**	**520**	**85**	**216**	**146**	**447**
MIDTOWN PHASE 2		SFD @ 2 per unit		5	10	5	8	0	13
		Townhouses @ 2.5 per unit		80	200	85	79	0	164
Subtotal				**85**	**210**	**90**	**87**	**0**	**177**
SECTION 3	Lot 1	Retail @ 5 per 1000 sf	9'	26,000	130	0	135	0	135
	Lot 3	Restaurant @ 13 per 1000 sf	9'	7,000	91	14	74	0	88
	Lot 2	Restaurant @ 13 per 1000 sf	9'	7,000	91	7	86	0	93
	Lot 4	Service station @ 1/180 + 1/emp	9'	3,000	18	16	18	0	34
	Lot 5	Vacant	9'	0	0	0	0	0	0
Subtotal				**43,000**	**330**	**37**	**313**	**0**	**350**
LAKELANDS REMAINDER		SFD @ 2 per unit		175	350	0	350	76	426
		Townhouses @ 2.5 per unit		137	342.5	170	142	32	344
		Urban Cottages @ 1 per unit		150	150	120	30	0	150
Subtotal				**312**	**842.5**	**290**	**522**	**108**	**920**
		Retail @ 5 per 1000 sf	9'	3,000	15	23	0	0	23
		Restaurant @ 13 per 1000 sf	9'	6,000	78	0	81	0	81
Subtotal				**9,000**	**93**	**23**	**81**	**0**	**104**
BEATTY MARKET SQUARE		[illegible]	9'	222,018	[illegible]	65	1150	0	1215
		Restaurant @ 5 per 1000 sf		[illegible]	192.8	67	63	0	130
Subtotal				**[illegible]**	[illegible]	[illegible]	[illegible]	**0**	**1345**
LAKELANDS MARKET SQUARE		Townhouses @ 2.5 per unit	8.5'	86	215	58	141.5	0	200
		Condominiums @ 2 per 2 B.R.	8.5'	230	460	110	354	0	464
		Apartments @ 2 per 2 B.R.	8.5'	270	540	89	407	0	496
		Live/work @ 4.5 per unit	9'	17	76.5	3	61	0	64
Subtotal				**603**	**1291.5**	**260**	**964**	**0**	**1224**
		Office @1 per 300 sf	9'	16,000	53.3	27	38	0	65
Subtotal				**16,000**	**53.3**	**27**	**38**	**0**	**65**
KENTLANDS MARKET SQUARE		Live/work @ 4.5 per unit	9'	30	135	33	118	0	151
Subtotal				**30**	**135**	**33**	**118**	**0**	**151**
TOTAL					**4,778.2**	**977.0**	**3,551.5**	**254.0**	**4,782.5**

SEE NEW PARKING SUMMARY BELOW

GENERAL NOTES FOR PROPOSED AMENDMENT OF USE FROM RETAIL TO RESTAURANT (BLDG. J), FEBRUARY, 2005

1. The boundary survey for Kentlands was prepared by Rodgers Consulting, Inc.
2. Topography was prepared aerially.
3. Existing contour interval is 2 feet.
4. The Kentlands properties are zoned MXD.
5. Setbacks: See 30 scale Site Plan for details
6. Maximum building height: Retail 2 stories.
7. The 30 scale Site Plan supersedes all 200, 100 and 50 scale plans.
8. Site Area Summary:

SDP 7-1 SITE AREA SUMMARY
JUNE, 1997

SECTION 4	TH OFFICE	0.92 ACRES
	RESIDENTIAL	15.58 ACRES
Subtotal		**16.5 ACRES**
MIDTOWN PHASE 2		**7.18 ACRES**
SECTION 3	LOT 1	3.70 ACRES
	LOT 2	0.95 ACRES
	LOT 3	1.10 ACRES
	LOT 4	2.56 ACRES
	LOT 5	0.12 ACRES
Subtotal		**8.43 ACRES**
LAKELANDS REMAINDER		**74.52 ACRES**
BEATTY TOWN CENTER	GSDC	14.55 ACRES
	LAKELANDS	6.94 ACRES
	NGS BLVD	0.72 ACRES
Subtotal		**22.21 ACRES**
LAKELANDS TOWN CENTER	BOZZUTO	8.80 ACRES
	RYLAND	9.78 ACRES
	OFFICE	0.60 ACRES
	REMAINDER	9.21 ACRES
Subtotal		**28.39 ACRES**
KENTLANDS TOWN CENTER		**2.24 ACRES**
TOTAL		**159.47 ACRES**

9. Development Summary and Use:
   1) Previously Approved SDP 7-1: 6,000 SF Retail (Bldg "J")
   Proposed Plan: 6,000 SF Retaurant (Bldg "J")

10. Proposed Parking Summary

Market Square Kentlands Permitted Use (254,650 S.F.)

Use	Percent Permitted	S.F. Permitted
*Commercial	Up to 100%	254,650 S.F.
Office	^Up to 10%	25,465 S.F.
**Education	^Up to 10%	25,465 S.F.

* Commercial uses include, but not limited to, retail, theatre, and restaurant.
** Education uses not to include driving and CDL schools.
^ Office and Education uses not to exceed a combined 10%.

△ **Market Square Kentlands Parking Requirements**

Use	S.F.	Parking Requirement	Parking Spaces
*Commercial	254,650	1/225 S.F.	1,132
Office	0	1/300 S.F.	0
**Education	0	1/250 S.F.	0
Total	**254,650 S.F.**		**1,132**
Retail Center 10% Reduction			**113**
			1,019 Min. Req. Parking
			*** 1284 Parking Provided**
			265 Surplus Parking

* Commercial uses include, but not limited to, retail, theatre, and restaurant.
** Education uses not to include driving and CDL schools.

* Includes 32 Handicap Spaces (Per Code 23 Handicap Spaces Required).

11. GREEN SPACE
    Overall Site – Required = 25%
    Provided = 25% or Greater Provided, Entire Kentlands/Lakelands Development.

12. The City of Gaithersburg previously approved the existing Forest Conservation Plan for Kentlands, which includes Kentlands/Lakelands.
13. Sormwater quality and quantity control is being provided for in existing Lake Varuna & ex. bay saver.
14. All ADA parking to be in accordance with Maryland State requirements.

LEGEND

Limit of SDP 7-1

Limit of Amendment

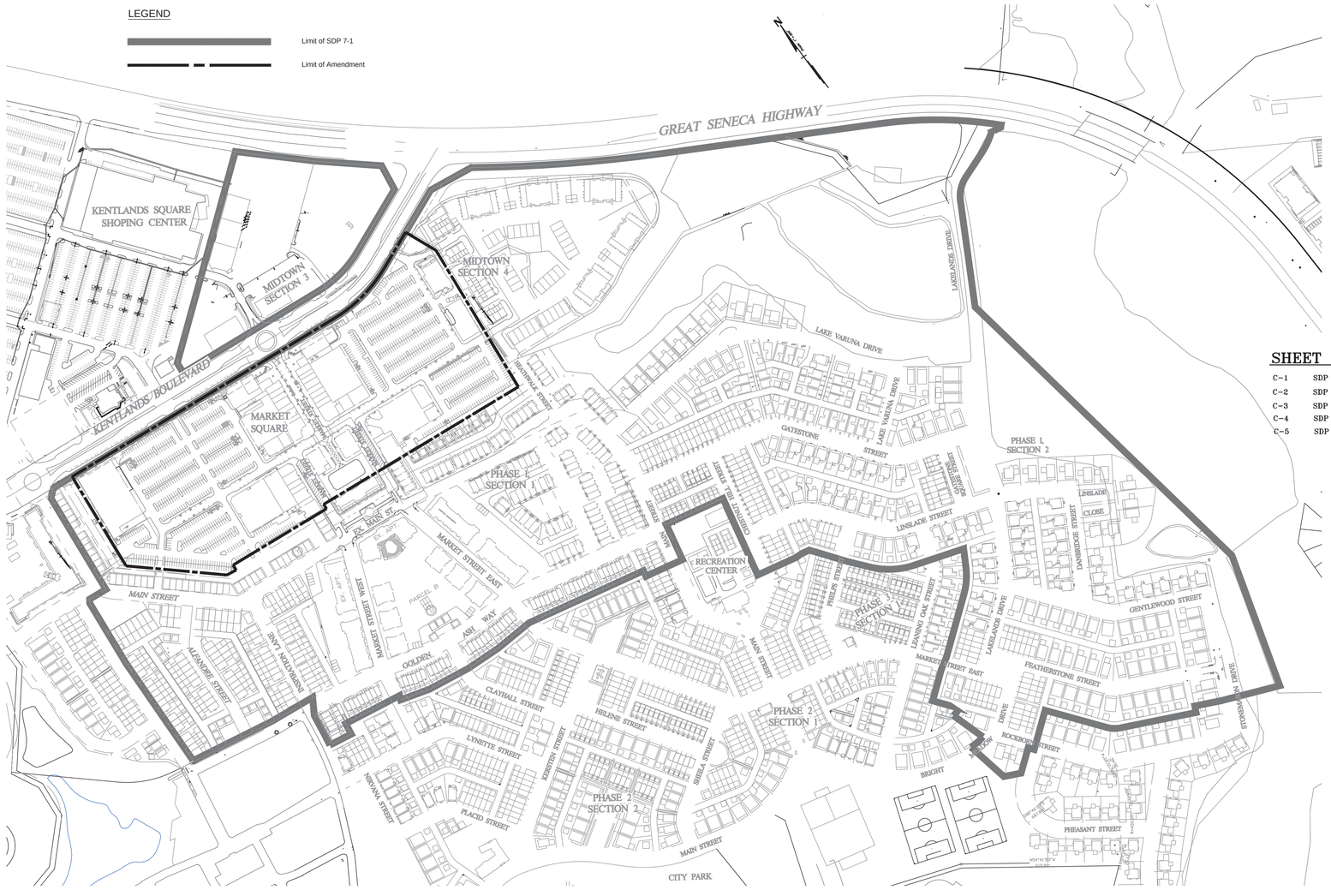

SHEET INDEX

C-1	SDP 7-1 AMENDMENT COVER SHEET
C-2	SDP 7-1 AMENDMENT SITE PLAN
C-3	SDP 7-1 AMENDMENT SITE DETAILS
C-4	SDP 7-1 AMENDMENT LANDSCAPE PLAN
C-5	SDP 7-1 AMENDMENT LANDSCAPE DETAILS

SDP 7-1 REVISIONS:
1) Midtown Section 3 Lot 3 (SDP-01-05, Approved 09/05/01)
2) Midtown Section 4 (SDP-00-005, Approved 10/15/01)
3) Midtown Section 3 Lot 1 (SDP-03-004, Approved 12/01/03)
4) Lakelands Office Bldg (SDP-03-001, Approved 06/02/2003)
5) SDP Revision (SDP-04-002, 02/09/04)

CITY OF GAITHERSBURG MAYOR & COUNCIL
31 SOUTH SUMMIT AVENUE, GAITHERSBURG, MARYLAND 20877
AMENDMENT TO SCHEMATIC DEVELOPMENT PLAN APPROVAL
AT THE REGULARLY SCHEDULED MEETING OF THE MAYOR AND CITY COUNCIL HELD ON _____
APPLICATION NO. ASDP-6950-2015 WAS GRANTED
S.D.P. AMENDMENT APPROVAL
BY RESOLUTION R-XX-XX WITH _____ ( ) CONDITIONS.
DATE _____ BY _____
NOTE: • ANY REVISIONS TO SIGNED PLANS MUST BE APPROVED BY THE MAYOR & CITY COUNCIL

ASDP-6950-2015

Joint Hearing - MCC & PC
ASDP-6950-2015
Exhibit 4a

STATE OF MARYLAND FRANK G. BOSSHART No. 27510 REGISTERED PROFESSIONAL ENGINEER

REVISION	DATE	REVISION	DATE	REVISION	DATE
				△ REV. PER AMENDMENT	03.04.15
				REV. PER CITY COMMENT	03.06.05
				REV. PER CITY COMMENT	02.09.05

Owner:
Kentlands II LLC, C/O The Beatty Company
6824 Elm Street
Suite 200
McLean, Virginia 22101
(703) 821-0500
Attn.: Mr. Ken Miller

△ SDP 7-1 Amendment Cover Sheet
Update Use and Parking Per New Code

RODGERS CONSULTING
Enhancing the value of land assets

Rodgers Consulting, Inc.
9260 Gaither Road
Gaithersburg, MD 20877
301.948.4700
301.948.6256 (fax)
301.253.6609
www.rodgers.com

	BY	DATE
BASE DATA	RCI	01/05
DESIGNED	SP	01/05
DRAWN	SP	05/05
REVIEWED	GU	01/05

RODGERS CONTACT:
RELEASE FOR
BY_____ DATE ____

MARKET SQUARE
KENTLANDS/LAKELANDS
City of Gaithersburg
Gaithersburg election district No. 9
Montgomery County, Maryland

SCALE: 1"=200'
JOB No. 0589A4
DATE: 02/15
C-1
SHEET No. 1 OF 5

N:\MD-Montgomery-City of Gaithersburg\Kentlands Square Shopping Center\autocad\Plot Plans\Market Square - SDP REVISIONS\Revised Sheets\1_sdp_rev02-15.dwg

PRELIMINARY NOT FOR CONSTRUCTION

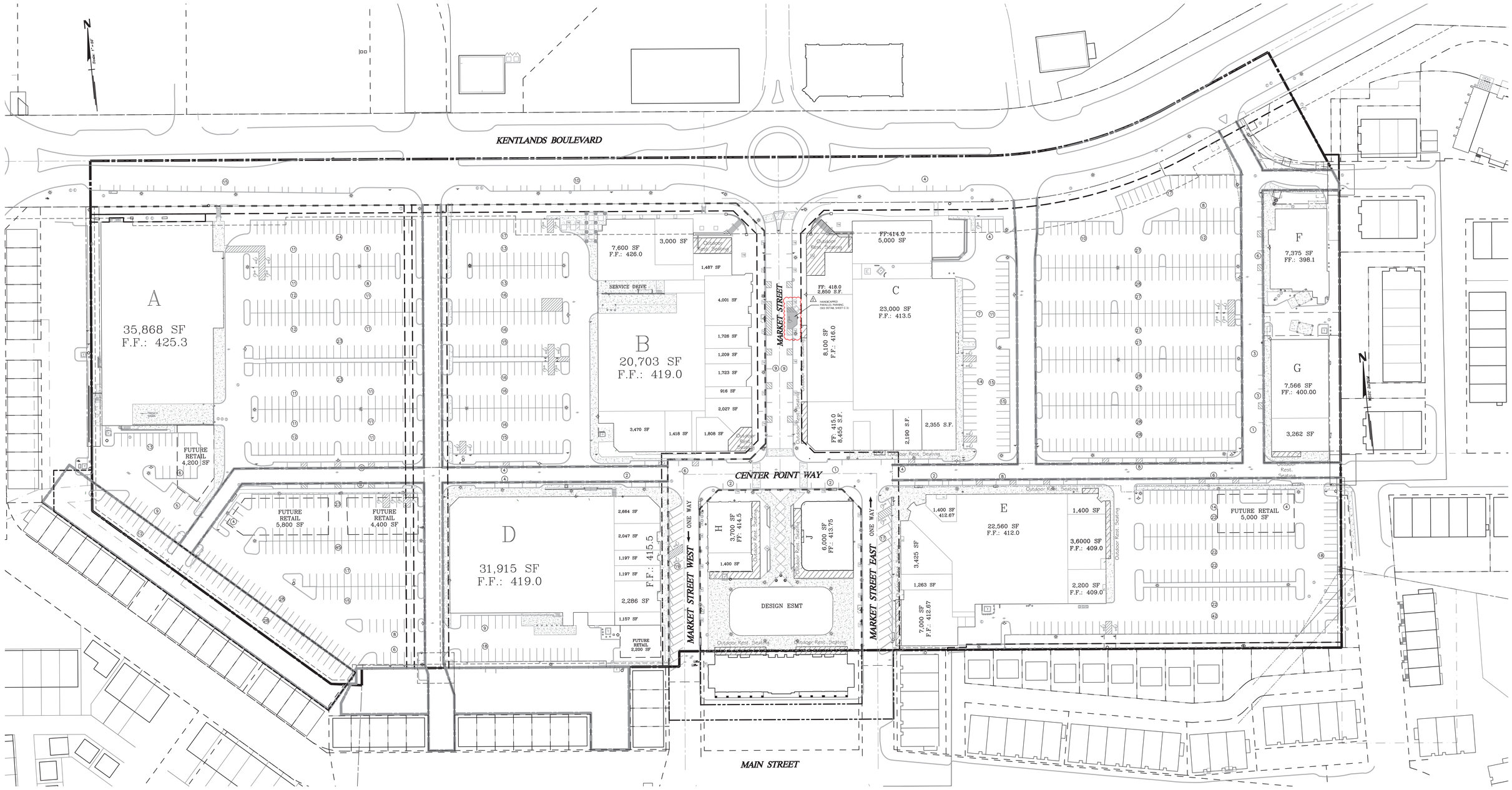

LEGEND:

⚠ ADA Parallel Parking

Outdoor Restaurant Seating

NOTES:

1: ALL PERIMETERS, PAVING EDGES AND ISLANDS SHALL BE CURBED.

2: CURBS, GUTTERS, SIDEWALKS AND PAVING SHALL BE INSTALLED IN SUCH A MANNER AS TO PROVIDE POSITIVE DRAINAGE OF ALL AREAS SO THERE IS NO ACCUMULATION OF SURFACE WATER.

3: ALL PAVING, STORM DRAINAGE, UTILITIES AND IMPROVEMENTS ON THIS PARCEL ARE PRIVATE AND THE MAINTENANCE IS THE RESPONSIBILITY OF THE OWNER.

CITY OF GAITHERSBURG MAYOR & COUNCIL
31 SOUTH SUMMIT AVENUE, GAITHERSBURG, MARYLAND 20877

AMENDMENT TO SCHEMATIC DEVELOPMENT PLAN APPROVAL

AT THE REGULARLY SCHEDULED MEETING OF THE MAYOR AND CITY COUNCIL HELD ON _____

APPLICATION NO. ASDP-6950-2015 WAS GRANTED

S.D.P. AMENDMENT APPROVAL

BY RESOLUTION R-XX-XX WITH _____ ( ) CONDITIONS.

DATE _____ BY _____

NOTE: ANY REVISIONS TO SIGNED PLANS MUST BE APPROVED BY THE MAYOR & CITY COUNCIL

LEGEND

PROP. GRADE

EX. GRADE

PROP. CURB & GUTTER

EX. CURB & GUTTER

00.0 TC — TOP OF CURB SPOT GRADE

+00.0 — FLOW LINE SPOT GRADE

HANDICAP RAMP

D — TRASH RECEPTACLE

ASDP-6950-2015

Joint Hearing - MCC & PC
ASDP-6950-2015
Exhibit 4b

REVISION	DATE	REVISION	DATE	REVISION	DATE
				⚠ REV. PER AMENDMENT	03.04.15
				REV. PER CITY COMMENT	03.06.05
				REV. PER CITY COMMENT	02.09.05

Owner:
Kentlands II LLC, C/O The Beatty Company
6824 Elm Street
Suite 200
McLean, Virginia 22101
(703) 821-0500
Attn.: Mr. Ken Miller

⚠ SDP 7-1 Amendment, Site Plan
Update Use and Parking Per New Code

RODGERS CONSULTING
Enhancing the value of land assets

Rodgers Consulting, Inc.
9260 Gaither Road
Gaithersburg, MD 20877
301.948.4700
301.948.6256 (fax)
301.253.6609
www.rodgers.com

	BY	DATE
BASE DATA	RCI	05/05
DESIGNED	SP	01/05
DRAWN	SP	01/05
REVIEWED	GU	01/05

RODGERS CONTACT:
RELEASE FOR
BY _____ DATE _____

MARKET SQUARE

KENTLANDS/LAKELANDS

City of Gaithersburg
Gaithersburg election district No. 9
Montgomery County, Maryland

SCALE: 1"=30'
JOB No. 0589A4
DATE: 02/15
C-2
SHEET No. 2 OF 5

N:\MD-Montgomery-City of Gaithersburg\Kentlands Square Shopping Center\autocad\Plat Plans\Market Square - SDP REVISIONS\Revised Sheets\2_sdp_rev02-15.dwg

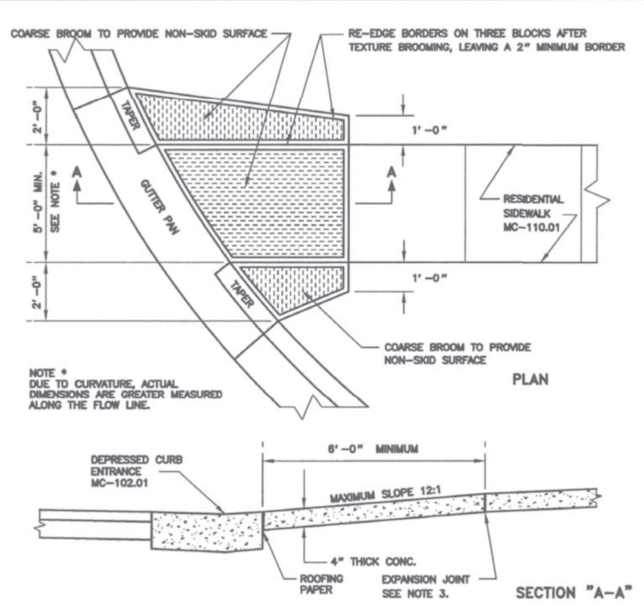

GENERAL NOTES

1. REFER TO MARYLAND STATE HIGHWAY ADMINISTRATION SPECIFICATIONS FOR MATERIAL AND METHODS OF CONSTRUCTION.
2. SIDEWALK RAMPS SHOULD BE LOCATED AS INDICATED. HOWEVER, EXISTING SURFACE UTILITIES AND EXISTING OR PROPOSED GEOMETRICS MAY AFFECT PLACEMENT.
3. EXPANSION JOINT MATERIAL SHALL BE 1/2 INCH PREFORMED CORK, TRIMMED AND SEALED WITH NON-STAINING, TWO COMPONENT POLYSULFIDE OR POLYURETHANE ELASTOMERIC TYPE SEALANT, COMPLYING WITH ASTM-C920. ⚠1

APPROVED 14 APR 06 DATE	REVISED	MONTGOMERY COUNTY DEPARTMENT OF PUBLIC WORKS & TRANSPORTATION
DIRECTOR, DEPT. OF PUBLIC WORKS & TRANSPORTATION	⚠1 ASTM-C920 4/2006	RESIDENTIAL SIDEWALK RAMP
for CHIEF, DIV. OF CAP. DEV.		STANDARD NO. MC-112.01

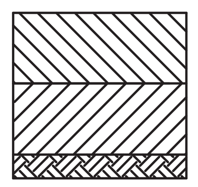

3" BITUMINOUS CONCRETE SURFACE COURSE IN 2 – 1 1/2" LAYERS

3" BITUMINOUS CONCRETE BASE COURSE

APPROVED SUBGRADE

* PROVIDE SUBDRAIN AT EACH INLET PER M.C. STDS.

OR

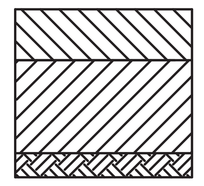

2" BITUMINOUS CONCRETE SURFACE COURSE

4" BITUMINOUS CONCRETE BASE COURSE

APPROVED SUBGRADE

* PROVIDE SUBDRAIN AT EACH INLET PER M.C. STDS.

TYPICAL PAVING SECTION
N.T.S.

PAVING NOTES:

1. THE FIRST OR INTERMEDIATE SURFACE COURSE MUST BE PLACED AS SOON AS FIELD CONDITIONS ALLOW AFTER THE BITUMINOUS CONCRETE BASE HAS BEEN PLACED. NO TRAFFIC ALLOWED ON BASE COURSE UNTIL FIRST SURFACE COURSE HAS BEEN PLACED.

SUBGRADE NOTES:

1. MATERIAL USED IN THE TOP 12 INCHES OF SUBGRADE IN CUTS AND FILLS SHALL COMPLY WITH THE FOLLOWING REQUIREMENTS:

   LIQUID LIMIT NOT TO EXCEED 40
   PLASTICITY INDEX NOT TO EXCEED 12

   THE MAXIMUM DRY WEIGHT OF THE MATERIAL SHALL NOT BE LESS THAN 105 POUNDS PER CUBIC FOOT AND SHALL BE COMPACTED TO NOT LESS THAN 100% OF THE MAXIMUM DENSITY EXCEPT FOR SIDEWALK SUBGRADE WHICH WILL BE COMPACTED TO NOT LESS THAN 95% OF THE MAXIMUM DENSITY.

2. MATERIAL USED BELOW THE TOP 12 INCHES OF SUBGRADE SHALL BE COMPACTED TO NOT LESS THAN 95% OF THE MAXIMUM DENSITY.

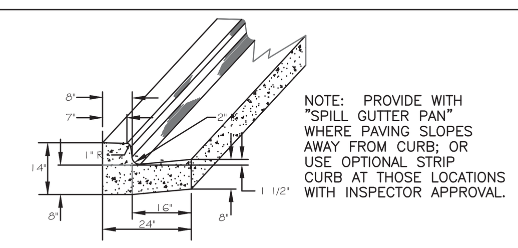

NOTE: PROVIDE WITH "SPILL GUTTER PAN" WHERE PAVING SLOPES AWAY FROM CURB; OR USE OPTIONAL STRIP CURB AT THOSE LOCATIONS WITH INSPECTOR APPROVAL.

1. REFER TO MONTGOMERY COUNTY DEPARTMENT OF TRANSPORTATION SPECIFICATIONS FOR MATERIALS, METHODS OF CONSTRUCTION, AND EXPANSION JOINT LOCATIONS.
2. THE STANDARD DISTANCE BETWEEN JOINTS SHALL BE TEN FEET (MAXIMUM AND MINIMUM DISTANCES SHALL BE THIRTEEN FEET AND SIX FEET RESPECTIVELY).

COMBINATION CURB & GUTTER MCDOT STD 10-A
REFER TO MC-100.01

NOT TO SCALE

STORM DRAIN NOTES

1. ALL STORM DRAINS SHALL BE CONSTRUCTED IN ACCORDANCE WITH LATEST EDITION OF THE GENERAL SPECIFICATION OF MARYLAND STATE HIGHWAY ADMINISTRATION AND MONTGOMERY COUNTY.
2. FOR TYPES OF STRUCTURES, REFER TO THE STANDARD STORM DRAINAGE DETAILS OF THE W.S.S.C., MARYLAND STATE HIGHWAY ADMINISTRATION AND MONTGOMERY COUNTY, UNLESS OTHERWISE NOTED.
3. WHERE THE DROP ON THE MAIN LINE THROUGH A STRUCTURE CAN BE ACCOMMODATED BY AN INVERT SLOPE OF 1 1/2:1 OR FLATTER, A ROUNDED CHANNEL SHALL BE BUILT TO THE CROWN OF THE PIPES.
4. INFORMATION CONCERNING UNDERGROUND UTILITIES WAS OBTAINED FROM AVAILABLE RECORDS, BUT THE CONTRACTOR MUST DETERMINE THE EXACT LOCATION AND ELEVATIONS OF THE MAINS BY DIGGING TEST PITS BY HAND AT ALL UTILITY CROSSINGS, WELL IN ADVANCE OF TRENCHING. IF CLEARANCES ARE LESS THAN SHOWN ON THIS PLAN OR TWELVE (12) INCHES, WHICHEVER IS LESS, CONTACT THE CITY OF GAITHERSBURG DEPARTMENT OF TRANSPORTATION INSPECTOR AND THE APPROPRIATE UTILITY OWNER BEFORE PROCEEDING WITH CONSTRUCTION.
5. CONTRACTOR MAKING ADJUSTMENTS TO W.S.S.C. UTILITIES MUST BE APPROVED AND WORK UNDER THE SUPERVISION OF THE W.S.S.C. MAINTENANCE BUREAU. REQUIRED MATERIALS MUST BE APPROVED BY THE W.S.S.C. QUALITY ASSURANCE SECTION.
6. CONTRACTOR SHALL NOTIFY W.S.S.C. MAINTENANCE INSPECTION SECTION HEAD AT 206-8043 FORTY EIGHT (48) HOURS IN ADVANCE OF BEGINNING ANY WORK IN THE VICINITY OF W.S.S.C. UTILITIES TO ARRANGE FOR INSPECTION AND, IF DESIRED, PROCUREMENT OF REQUIRED MATERIALS FROM W.S.S.C.
7. ALL INLETS SHALL BE PROVIDED WITH WEEP HOLES AND FOUNDATION DRAINAGE MATERIALS PER M.C. STD.
8. WHERE ANY PART OF THE STORM DRAIN SYSTEM IS LOCATED IN FILL SECTION, PROVIDE SELECT FILL MATERIAL COMPACTED TO 95% AASHTO T-99 DENSITY FROM ORIGINAL UNDISTURBED GROUND UP TO STRUCTURE BOTTOM SLABS AND PIPE BEDDING.
9. ELEVATIONS SHOWN ON PROFILES ARE AT PIPE INVERTS, UNLESS OTHERWISE NOTED.
10. GRADE ALL DISTURBED AREAS TO PROVIDE POSITIVE DRAINAGE.
11. ALL STANDARD STORM DRAINAGE STRUCTURES ARE SUBJECT TO MODIFICATION BY THE FIELD INSPECTOR TO MEET FIELD REQUIREMENTS.
12. CONTRACTOR SHALL NOTIFY MISS UTILITY (1-800-257-7777), 48 HOURS IN ADVANCE OF ANY EXCAVATION.
13. THE PRIVATE STORM DRAIN SYSTEMS ARE TO BE MAINTAINED BY THE PROPERTY OWNER.

PUBLIC PAVING NOTES

1. ALL MATERIALS AND METHODS OF CONSTRUCTION SHALL BE IN CONFORMANCE WITH MD S.H.A., M.C. OR AS SPECIFIED IN THE CONTRACT SPECIFICATIONS.
2. CONNECTIONS BETWEEN EXISTING PAVING SECTIONS AND REPLACEMENT/NEW PAVING SECTIONS SHALL BE CLEAN, VERTICAL JOINTS.
3. ELEVATIONS SHOWN ON THE PLANS ARE FOR PAVEMENT SURFACE/CURB FLOW LINES, UNLESS OTHERWISE NOTED.
4. PAVING SURFACES SHALL BE SMOOTH & AT UNIFORM GRADES WITHOUT DEPRESSIONS THAT TRAP WATER. REFER TO THE SPECIFICATIONS FOR DEFINITIVE REQUIREMENTS.

PRIVATE PAVING NOTES

1. ALL MATERIALS AND METHODS OF CONSTRUCTION SHALL BE IN CONFORMANCE WITH THE LATEST EDITION OF THE GENERAL SPECIFICATIONS OF MARYLAND STATE HIGHWAY ADMINISTRATION AND THE CITY OF GAITHERSBURG.
2. ALL PAVING SPOT ELEVATIONS ARE FOR THE FLOWLINE/SURFACE OF PAVING UNLESS OTHERWISE NOTED.
3. THE PAVING WITHIN THE CONFINES OF THIS PROPERTY IS PRIVATE AND IS TO BE MAINTAINED BY THE OWNER.
4. THIS PLAN IS TO BE USED FOR FINAL ELEVATIONS AND PAVING ALIGNMENTS.
5. ALL PERIMETERS, PAVING EDGES AND ISLANDS SHALL BE CURBED UNLESS OTHERWISE NOTED.
6. CURBS, GUTTERS, SIDEWALKS AND PAVING SHALL BE INSTALLED IN SUCH A MANNER AS TO PROVIDE POSITIVE DRAINAGE OF ALL AREAS SO THERE IS NO ACCUMULATION OF SURFACE WATER.
7. ALL PAVING, STORM DRAINAGE, UTILITIES AND IMPROVEMENTS ON THIS PARCEL ARE PRIVATE AND THE MAINTENANCE IS THE RESPONSIBILITY OF THE OWNER.

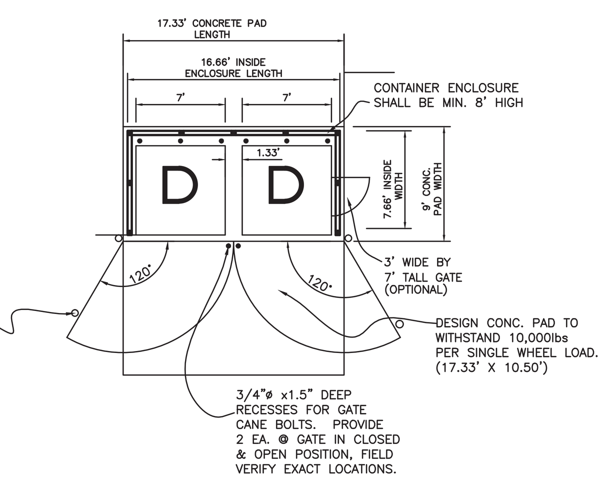

DUMPSTER ENCLOSURE DETAIL
NTS

NOTES:
1) DUMPSTER TO BE PLACED AT LEAST 6" ABOVE THE PAVING, SO THAT THERE WOULD BE ENOUGH ROOM FOR STORMDRAIN FLOW TO INLET.
2) DUMPSTER WILL WHEELED OUT, WHEN TRASHES ARE TAKEN OUT.

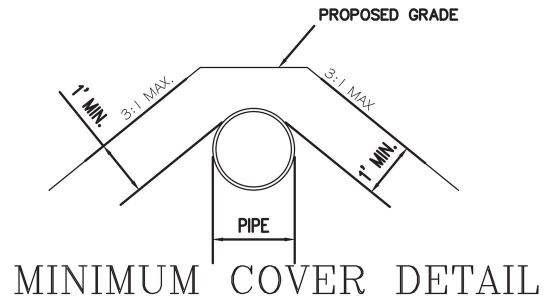

MINIMUM COVER DETAIL
NOT TO SCALE
(FOR OUTFALLS AND NON-TRAFFIC BEARING AREAS ONLY)

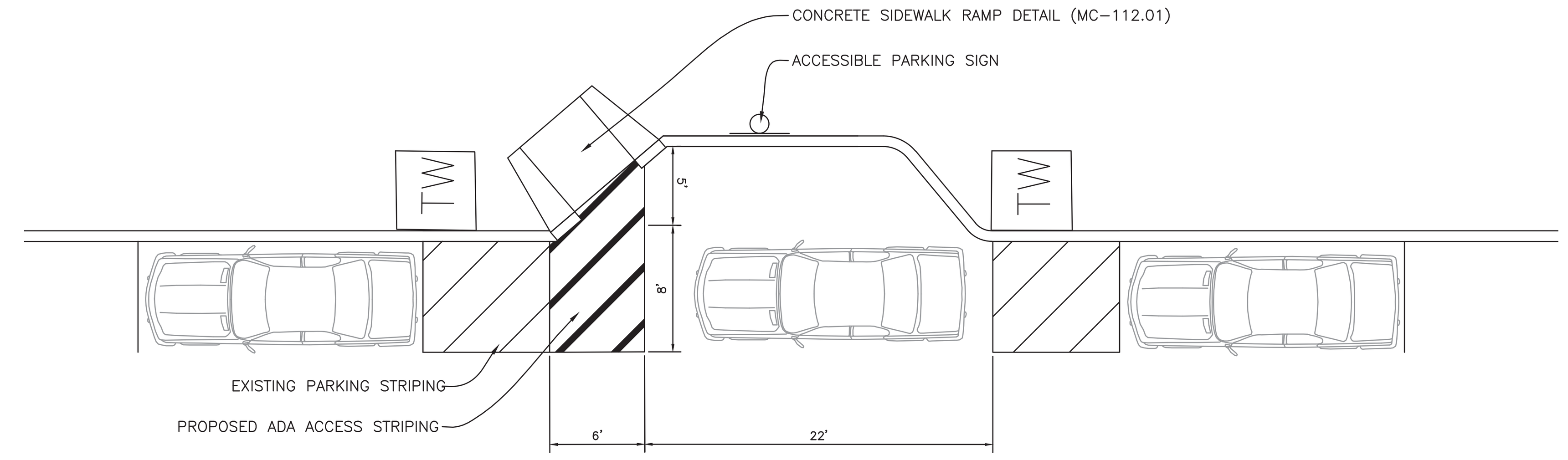

⚠1 **HANDICAPPED PARALLEL PARKING DETAIL**
NTS

NOTES:
1) SIDEWALK RAMP NOT TO EXCEED 1:12 SLOPE.

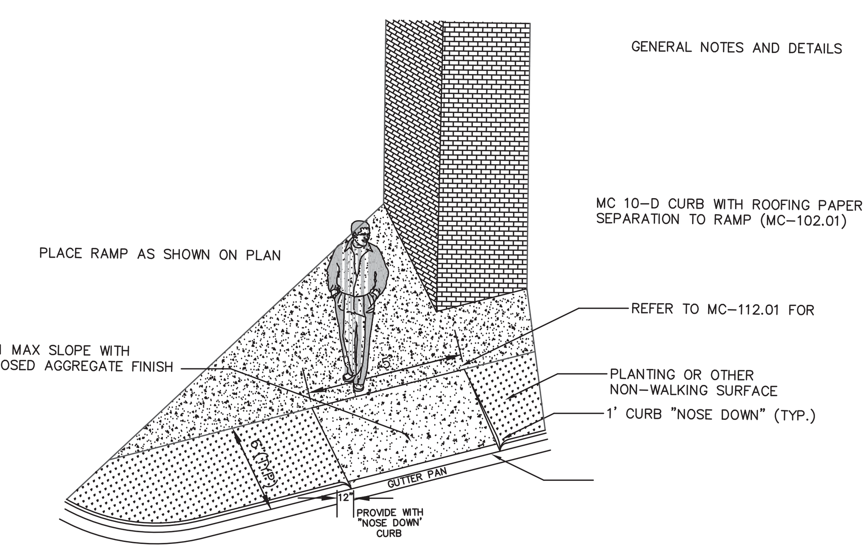

TYPICAL HANDICAP RAMP DETAIL
NOT TO SCALE

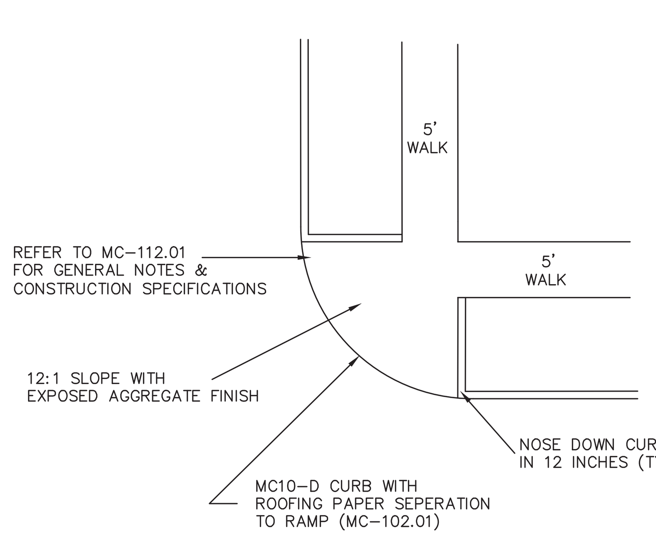

HANDICAP RAMP DETAIL
NOT TO SCALE

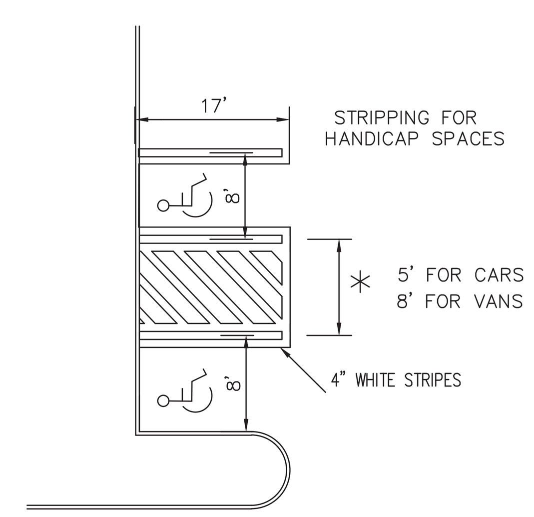

NOTE: ALL PARKING BAYS TO HAVE 26' DRIVE AISLES AND BE 60' FEET WIDE

TYPICAL HEAD-IN PARKING SPACE DETAIL
N.T.S.

A MARYLAND REGISTERED PROFESSIONAL ENGINEER OR ARCHITECT SEAL AND SIGNATURE ON PLANS WILL BE ACCEPTED AS PRIMA FACIE EVIDENCE THAT PLANS ARE IN COMPLIANCE WITH APPLICABLE CODES AND REGULATIONS.

CALL "MISS UTILITY" AT
1-800-257-7777
48 Hours Before Start Of Construction

CITY OF GAITHERSBURG MAYOR & COUNCIL
31 SOUTH SUMMIT AVENUE, GAITHERSBURG, MARYLAND 20877

AMENDMENT TO SCHEMATIC DEVELOPMENT PLAN APPROVAL

AT THE REGULARLY SCHEDULED MEETING OF THE MAYOR AND CITY COUNCIL HELD ON ____________
APPLICATION NO. ASDP-6950-2015 WAS GRANTED
S.D.P. AMENDMENT APPROVAL
BY RESOLUTION R-XX-XX WITH ______ ( ) CONDITIONS.
DATE __________ BY __________

NOTE: ANY REVISIONS TO SIGNED PLANS MUST BE APPROVED BY THE MAYOR & CITY COUNCIL

Joint Hearing - MCC & PC
ASDP-6950-2015
Exhibit 4c

ASDP-6950-2015

REVISION	DATE	REVISION	DATE	REVISION	DATE
				⚠1 REV. PER AMENDMENT	03.04.15
				REV. PER CITY COMMENT	02.09.05

Owner:
Kentlands II LLC, C/O The Beatty Company
6824 Elm Street
Suite 200
McLean, Virginia 22101
(703) 821-0500
Attn.: Mr. Ken Miller

⚠ SDP 7-1 Amendment, Site Details
Update Use and Parking Per New Code

RODGERS CONSULTING
Enhancing the value of land assets

Rodgers Consulting, Inc.
9260 Gaither Road
Gaithersburg, MD 20877
301.948.4700
301.948.6256 (fax)
301.253.6609
www.rodgers.com

	BY	DATE
BASE DATA	RCI	01/05
DESIGNED	SP	02/15
DRAWN	SP	01/05
REVIEWED	GU	01/05

RODGERS CONTACT:
RELEASE FOR ______
BY ______ DATE ____

MARKET SQUARE
KENTLANDS/LAKELANDS
City of Gaithersburg
Gaithersburg election district No. 9
Montgomery County, Maryland

SCALE: 1'=30'
JOB No. 0589A4
DATE: 02/15
C-3
SHEET No. 3 OF 5

PRELIMINARY NOT FOR CONSTRUCTION

N:\MD-Montgomery-City of Gaithersburg\Kentlands Square Shopping Center\autocad\Plot Plans\Market Square - SDP REVISIONS\Revised Sheets\3_sdp_rev02-15.dwg

PRELIMINARY NOT FOR CONSTRUCTION

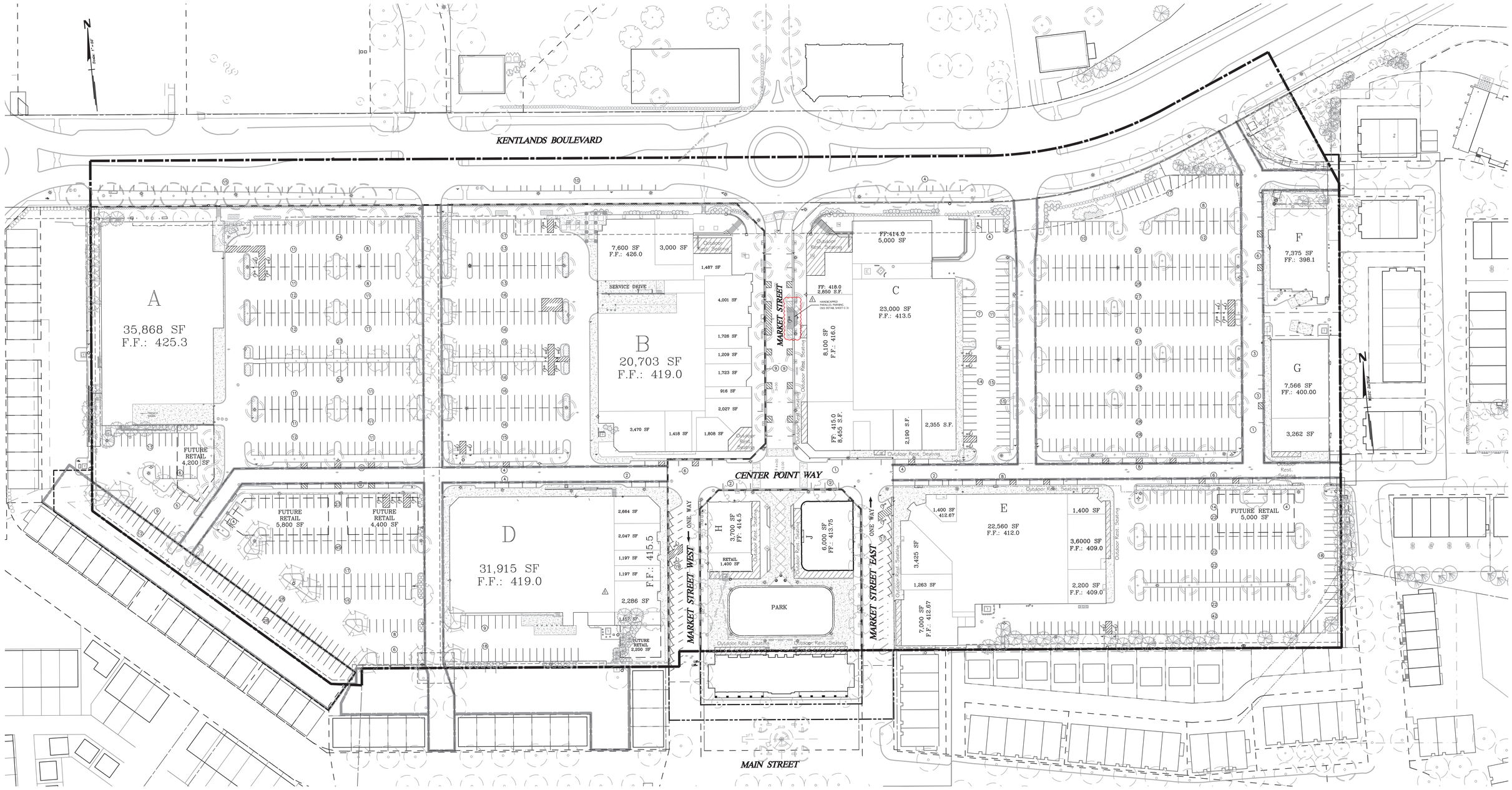

LEGEND:

- ADA Parallel Parking
- Outdoor Restaurant Seating

NOTES:

1: ALL PERIMETERS, PAVING EDGES AND ISLANDS SHALL BE CURBED.

2: CURBS, GUTTERS, SIDEWALKS AND PAVING SHALL BE INSTALLED IN SUCH A MANNER AS TO PROVIDE POSITIVE DRAINAGE OF ALL AREAS SO THERE IS NO ACCUMULATION OF SURFACE WATER.

3: ALL PAVING, STORM DRAINAGE, UTILITIES AND IMPROVEMENTS ON THIS PARCEL ARE PRIVATE AND THE MAINTENANCE IS THE RESPONSIBILITY OF THE OWNER.

LEGEND

- PROP. GRADE
- EX. GRADE
- PROP. CURB & GUTTER
- EX. CURB & GUTTER
- 00.0 TC — TOP OF CURB SPOT GRADE
- +00.0 — FLOW LINE SPOT GRADE
- HANDICAP RAMP
- D — TRASH RECEPTACLE
- EXISTING TREES

NO LANDSCAPE REVISION.

CITY OF GAITHERSBURG MAYOR & COUNCIL
31 SOUTH SUMMIT AVENUE, GAITHERSBURG, MARYLAND 20877

AMENDMENT TO SCHEMATIC DEVELOPMENT PLAN APPROVAL

AT THE REGULARLY SCHEDULED MEETING OF THE MAYOR AND CITY COUNCIL HELD ON _____

APPLICATION NO. ASDP-6950-2015 WAS GRANTED

S.D.P. AMENDMENT APPROVAL

BY RESOLUTION R-XX-XX WITH _____ ( ) CONDITIONS.

DATE _____ BY _____

NOTE: ANY REVISIONS TO SIGNED PLANS MUST BE APPROVED BY THE MAYOR & CITY COUNCIL

Joint Hearing - MCC & PC
ASDP-6950-2015
Exhibit 4d

STATE OF MARYLAND — STEVEN G. BOSCHUK — No. 29513 — REGISTERED PROFESSIONAL ENGINEER

ASDP-6950-2015

REVISION	DATE	REVISION	DATE	REVISION	DATE
				REV. PER AMENDMENT	03.04.15
				REV. PER CITY COMMENT	04.06.05
				REV. PER CITY COMMENT	02.09.05

Owner:
Kentlands II LLC, C/O The Beatty Company
6824 Elm Street
Suite 200
McLean, Virginia 22101
(703) 821-0500
Attn.: Mr. Ken Miller

SDP 7-1 Amendment, Landscape Plan
Update Use and Parking Per New Code

RODGERS CONSULTING
Enhancing the value of land assets

Rodgers Consulting, Inc.
9260 Gaither Road
Gaithersburg, MD 20877
301.948.4700
301.948.6256 (fax)
301.253.6609
www.rodgers.com

	BY	DATE
BASE DATA	RCI	05/05
DESIGNED	SP	01/05
DRAWN	SP	01/05
REVIEWED	GU	01/05

RODGERS CONTACT:
RELEASE FOR
BY _____ DATE _____

MARKET SQUARE

KENTLANDS/LAKELANDS

City of Gaithersburg
Gaithersburg election district No. 9
Montgomery County, Maryland

SCALE: 1"=30'
JOB No. 0589A4
DATE: 02/15
C-4
SHEET No. 4 OF 5

N:\MD-Montgomery-City of Gaithersburg\Kentlands Square Shopping Center\autocad\Plot Plans\Market Square - SDP REVISIONS\Revised Sheets\4_sdp_rev02-15.dwg

PLANTING SPECIFICATIONS

GENERAL NOTES

1. This afforestation/reforestation plan is provided in accordance with the requirements set forth by the Forest and Tree Preservation Ordinance of the City of Rockville. The preparation of this plan, the notes and details were prepared using the guidelines of the City of Rockville's Adopted Forest Conservation Manual.
2. Afforestation/reforestation planting and related work must be performed by a contractor that is knowledgeable and experienced in afforestation/reforestation techniques and planting practices.
3. The enforcement staff of the City of Rockville requires that all trees planted in conformance with the Forest and Tree Preservation Ordinance, must be alive and in good condition at the end of the two–year maintenance period in order for the release of financial security.
4. Base sheet information was provided by Rodgers and Associates, Inc.

QUALITY ASSURANCE

1. Names of plant material listed conform generally with names accepted by the nursery trade. The contractor is to provide stock true to botanical name.
2. All plant material shall conform to the current issue of the American Standard for Nursery Stock published by the American Association of Nurserymen.
3. Hardwood trees shall meet the following standards: trees shall have a solid root mass with the soil in place. The roots shall appear clean and white in coloration. If growing, the trees shall appear healthy with no foliage spots, discoloration, wilting or other evidence of the presence of disease or insects.
4. If specified material is not obtainable submit in writing to Rodgers and Associates, Inc. for the evaluation and approval of equivalent material. Only native material as defined by the Montgomery County Trees Technical Manual will be acceptable for afforestation/reforestation plantings.

PRODUCT SPECIFICATIONS

1. FERTILIZER: All fertilizer shall be granular, packet or pellet with 35 to 80% of the total nitrogen in a slow release form. For trees and shrubs fertilizer shall be a complete fertilizer with a minimum analysis of 10% nitrogen, 6% phosphorus and 4% potassium. For use on specimen or significant trees, the fertilizer shall be high in phosphorus and low in nitrogen to promote root growth. A water–insoluble nitrogen, 2–year release fertilizer with a ratio of 20% nitrogen, 10% phosphorus and 5% potassium shall be used in wetland and riparian backfill mixtures. Fertilizer shall be added depending on the size of the plant and the manufacturer's recommended rate.
2. ORGANIC MATTER:
   - Peatmoss —Type 1 spagnum peatmoss, finely divided with pH of 3.1 – 5.0; or
   - Sedge Peat —Decomposed peat containing no identifiable fibers; or
   - Composted Sewage Sludge —Approved, screened, polymer–dewatered sewage sludge with a pH of 6.2 – 7.2.
3. BACK–FILL MIXTURE: Back–fill mixture for containerized trees shall be 3/4 existing soil mixed with 1/4 organic material, plus granular fertilizer.
4. MULCH: Material shall be well aged, fine shredded hardwood, dark brown in color, or approved equal. Material shall be mulching grade, uniform in size and free of foreign matter.

PRE–PLANTING SPECIFICATIONS

1. Allow six (6) months in advance to order materials and plants.
2. Acceptable planting time for container grown material (trees, shrubs and seedlings) is from March – June 15 and September – December. Planting shall not take place in sub–freezing temperatures, when the ground is frozen, or when the soil is too wet or dry or otherwise in a condition not generally accepted as satisfactory for planting and may adversely affect plant materials.
3. All planting areas shall be in a stabilized condition so as to minimize soil erosion. Seeding is NOT a part of these plan documents. Refer to the Sediment and Erosion Control Plans for seeding specifications.
4. The landscape contractor shall notify Rodgers and Associates, Inc. (301–948–4700) at least 48 hours prior to the start of construction to arrange a pre–planting meeting.
5. Planting should occur within 24 hours of plant material delivery to the site. Plant materials left unplanted for more than 24 hours shall be protected from direct sun and weather and kept moist. Nursery stock shall not be left unplanted for more than 2 weeks.
6. When conditions detrimental to plant growth are encountered, such as rubble fill, adverse drainage conditions, or obstructions, notify Rodgers and Associates, Inc. (301–948–4700) before planting.
7. The Landscape Contractor is responsible for the location of all existing underground utilities. The repair of utilities damaged during planting shall be at the Landscape Contractor's expense.
8. The Landscape Contractor is responsible for coordinating access to the site with the owner.

PLANTING SPECIFICATIONS

1. Refer to the planting plan and plant schedule for plant material size, location and spacing.
2. All plant material shall be planted by manual methods of planting using shovels, dibble bars and/or mattocks.
3. De–consolidate the soil within the afforestation/reforestation areas 12" by dicing or plowing, except in areas identified as wetlands on the plan. All plantings in the wetland area will be done manually, with minimal disturbance to the area.
4. Back–fill mixture for containerized trees shall be 3/4 existing soil mixed with 1/4 organic material or if planted on fill material 12" of native stockpiled topsoil or other approved equal. Remove the tree from the container and gently loosen the roots from the soil. During the back–filling procedure, thoroughly water the soil around the root mass while tamping the back–filled mixture to eliminate any air–pockets. After back–filling is complete, and the top of the root mass and planting area is mulched, water on the interior of the root mass until it is thoroughly saturated, even if it is raining.
5. Only the number of trees that can be planted in one day shall be taken to the field.
6. Trees shall be planted in a aggregate distribution pattern over the entire planting area. Plant according to the details on this Sheet. Planting of trees shall be accomplished using manual methods of installation. The root collar should be set just below the ground.
7. Trees shall not receive an amended back–fill mixture but shall be fertilized at the manufacturers recommended rate. Remove the tree from the container and gently loosen the roots from the soil. After back–filling tamp the back–fill to eliminate any air–pockets. After back–filling is complete, and the top of the root mass and planting area is mulched, water on the interior of the root mass until it is thoroughly saturated, even if it is raining.
8. Areas planted with trees and container grown trees shall be mulched after planting, as identified in the details on this sheet.
9. Remove all tags, labels, string and wire from the planting material after planting.

GUARANTEE AND REPLACEMENT

1. All plant material shall be guaranteed by the landscape contractor to remain alive and in a healthy, vigorous condition for a period of one year following planting.
2. At the end of the warranty period, inspection of the plant material will be made by the Owner's representative. Plant material which is dead or in an unhealthy condition shall be removed from the site and replaced at the expense of the landscape contractor.
3. A tree shall be considered dead when the main leader has died back, or 25% of the crown is dead.
4. Plant material replacements shall be of the same type, size and variety as specified in the plant legend or as accepted in writing as substitutes before original planting. Plants shall be furnished, planted and mulched as specified herein and at the expense of the landscape contractor.

DEVELOPMENT PROGRAM

1. The development process for conservation areas within this project is as follows:
   - A. Installation of afforestation/reforestation areas and permanent signing. Afforestation/reforestation areas must be accomplished no later than 1 year after the completion of the development project;
   - B. Maintain the afforestation/reforestation areas for a period of 2 years to guarantee the required survival rates; and
   - C. Final inspection and release of financial security.
2. Financial security must be provided before Enforcement and Monitoring staff of City of Rockville authorize clearing and grading activities to begin.
3. The amount of financial security will be equal to the estimated cost of the afforestation/reforestation and maintenance.
4. The financial security will be in force until all measures for afforestation/reforestation and maintenance requirements have been fulfilled to the satisfaction of the City of Rockville Enforcement and Monitoring staff.
5. Partial release of the financial security may be authorized by the City of Rockville Enforcement and Monitoring staff after planting has been completed. If staff is satisfied that the planting plan has been followed and the plan material is properly planted and in good condition, up–to one half of the financial security will be released.
6. Full release of the financial security will be provided by the City of Rockville at the end of the two year maintenance and monitoring period provided the conservation areas pass inspection.

MISCELLANEOUS

1. A Preconstruction meeting with the City Forester is to be arranged by the contractor two (2) weeks prior to the start of construction.
2. No unauthorized activities are to occur within the tree protection areas (those areas within the tree protection fence) fuel storage and refueling procedures or any type of storage use.
3. Tree protection fencing is to be located at the edge of critical root zone or at edge of unimproved area.

NOTE:

1. Location of street trees may be subject to change to avoid conflict with street lighting: trees will not be permitted within 15 feet of any street light.
2. Trees are to be located a minumum distance of:
   - A. 5 feet from water box
   - B. 5 feet from gas box
   - C. 5 feet from storm drain inlets and manholes
   - D. 10 feet from fire hydrants
   - E. 15 feet from street lights
3. Trees are not permitted within limit of sight. See Montgomery County Design Standards No. MC-700.01 - Tree locations

EVERGREEN TREE PLANTING

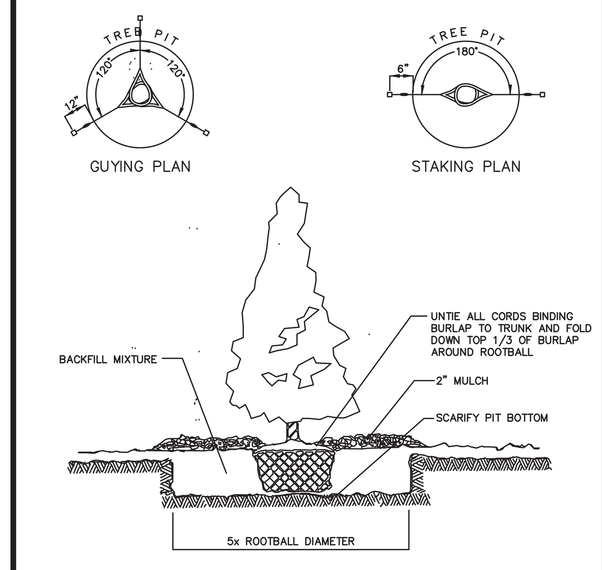

NOTES:

1. Remove stake and guy wires after 4–6 months.
2. All pruning must be done after planting.

SOURCE: American Forestry Association

DECIDUOUS TREE PLANTING CONTAINER GROWN AND BALLED & BURLAPPED STOCK

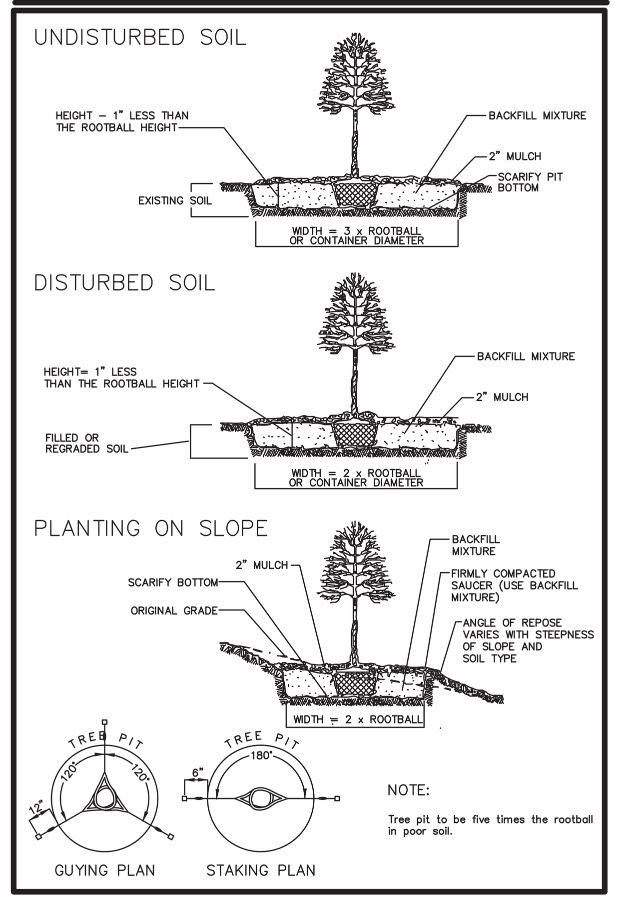

NOTE:

Tree pit to be five times the rootball in poor soil.

SOURCE: Adapted from Maryland State FOREST CONSERVATION MANUAL

STAKED TREE SPECIFICATION (2)

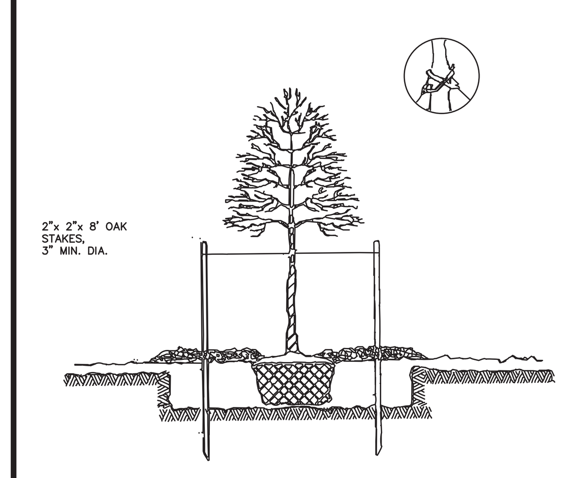

NOTES:

1. The staking of trees may be used only when specified on the planting plan.
2. Stakes and wires must be removed no later than 12 months after planting.
3. Tree pit preffered to be five times the rootball size, particularly in poor soil.

SOURCE: Adapted from Maryland State FOREST CONSERVATION MANUAL

SHRUB PLANTING

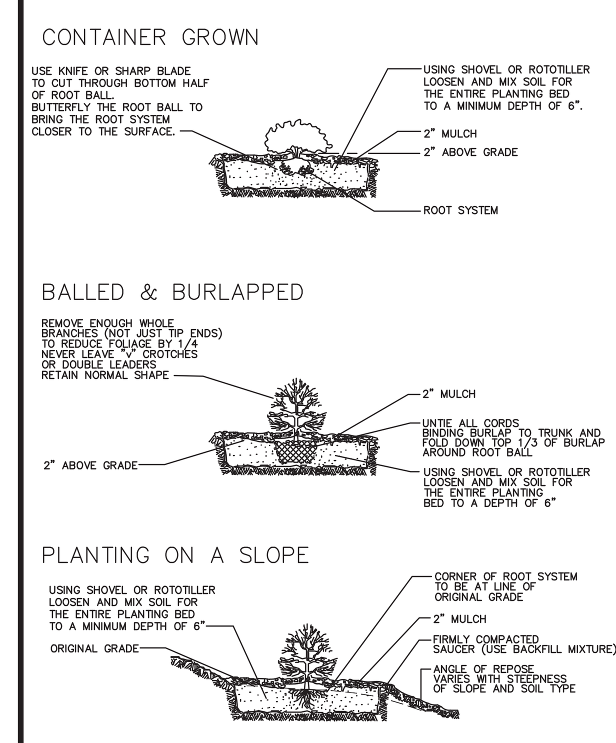

NOTES:

1. Minimum root spread to be in accordance with "American Standards for Nursery Stock."
2. Prune all damaged, diseased or weak limbs and roots.
3. Cleanly prune all damaged root ends.

SOURCE: Adapted from Maryland State FOREST CONSERVATION MANUAL

TREE PLANTING AND MAINTENANCE CALENDAR

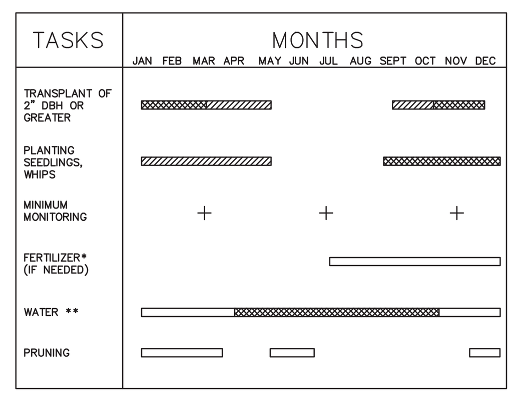

KEY

- \+ ACTIVITIES DURING THESE MONTHS ARE DEPENDENT UPON GROUND CONDITIONS
- * DEPENDENT UPON SITE CONDITIONS
- ** DEPENDENT UPON SITE CONDITIONS: WEEKLY WATERING IS GREATLY RECOMMENDED FROM MAY THROUGH OCTOBER UNLESS WEEKLY RAINFALL EQUALS 1"
- GREATLY RECOMMENDED
- RECOMMENDED WITH ADDITIONAL CARE
- RECOMMENDED

NOTE:

The planting and care of trees is most successful when coordinated with the local climatic conditions. This calendar summarizes some of the recommended time frames for basic reforestation and stress reduction activities.

SOURCE: Adapted from Maryland State FOREST CONSERVATION MANUAL

PRELIMINARY NOT FOR CONSTRUCTION

CALL "MISS UTILITY" AT 1-800-257-7777
48 Hours Before Start Of Construction

A MARYLAND REGISTERED PROFESSIONAL ENGINEER OR ARCHITECT SEAL AND SIGNATURE ON PLANS WILL BE ACCEPTED AS PRIMA FACIE EVIDENCE THAT PLANS ARE IN COMPLIANCE WITH APPLICABLE CODES AND REGULATIONS.

NO LANDSCAPE REVISION.

CITY OF GAITHERSBURG MAYOR & COUNCIL
31 SOUTH SUMMIT AVENUE, GAITHERSBURG, MARYLAND 20877
AMENDMENT TO SCHEMATIC DEVELOPMENT PLAN APPROVAL
AT THE REGULARLY SCHEDULED MEETING OF THE MAYOR AND CITY COUNCIL HELD ON ______
APPLICATION NO. ASDP-6950-2015 WAS GRANTED
S.D.P. AMENDMENT APPROVAL
BY RESOLUTION R-XX-XX WITH ______ ( ) CONDITIONS.
DATE ______ BY ______
NOTE: ANY REVISIONS TO SIGNED PLANS MUST BE APPROVED BY THE MAYOR & CITY COUNCIL

Joint Hearing - MCC & PC
ASDP-6950-2015
Exhibit 4e

ASDP-6950-2015

REVISION	DATE	REVISION	DATE	REVISION	DATE
				⚠1 REV. PER AMENDMENT	03.04.15
				REV. PER CITY COMMENT	02.09.05

Owner:
Kentlands II LLC, C/O The Beatty Company
6824 Elm Street
Suite 200
McLean, Virginia 22101
(703) 821-0500
Attn.: Mr. Ken Miller

⚠1 SDP 7-1 Amendment, Landscape Details
Updated Use and Parking Per New Code

RODGERS CONSULTING
Enhancing the value of land assets

Rodgers Consulting, Inc.
9260 Gaither Road
Gaithersburg, MD 20877
301.948.4700
301.948.6256 (fax)
301.253.6609
www.rodgers.com

	BY	DATE
BASE DATA	RCI	05/05
DESIGNED	SP	05/05
DRAWN	SP	05/05
REVIEWED	GU	05/05

RODGERS CONTACT:
RELEASE FOR ______
BY ______ DATE ______

MARKET SQUARE
KENTLANDS/LAKELANDS
City of Gaithersburg
Gaithersburg election district No. 9
Montgomery County, Maryland

SCALE: 1'=30'
JOB No. 0589A4
DATE: 02/15
C-5
SHEET No. 5 OF 5

N:\MD–Montgomery–City of Gaithersburg\Kentlands Square Shopping Center\autocad\Plot Plans\Market Square – SDP REVISIONS\Revised Sheets\5_sdp_rev02–15.dwg

Statement of Master Plan and Zoning Regulation Compliance
Kentlands Market Square Schematic Development Plan Amendment Application

I. INTRODUCTION

The property that is the subject of this Schematic Development Plan Amendment Application ("Amendment") is known as Kentlands Market Square, a retail/ commercial center generally bordered by Kentlands Boulevard, Main Street, and Great Seneca Highway in Gaithersburg ("Property"). The Property is owned by Beatty Management Company ("Applicant") and is the subject of approved Schematic Development Plan SDP-04-002 ("SDP") and approved Site Plan K-1084.

II. PROPOSED SCHEMATIC DEVELOPMENT PLAN AMENDMENT

The Amendment proposes to allow for up to 10% of the approved commercial space to be used for office use and/ or educational use, and to convert two standard parking spaces along Market Street, in front of Building C, into a single handicap space ("Amendment"). The modifications are requested to accommodate new tenants in the center and to address the needs of a specific tenant to have better handicap access to its space. No new construction or site modifications are proposed, and all other aspects of the SDP are proposed to remain unchanged.

III. MASTER PLAN COMPLIANCE

The Property is subject to the 2008 Kentlands Boulevard Commercial District Master Plan ("Master Plan"). The Master Plan Framework seeks to "encourag[e] a dynamic mix of uses," "promote a critical mass and broad mix of mutually supportive uses, including a range of housing choices, retail, small offices and restaurant offerings, and public, personal and professional services that support the vitality of the area" and "[e]ncourage development that supports the long-term vision for the area while fulfilling short-term needs." Master Plan, p. 4.4. These objectives are achieved with the Amendment, which is targeted at allowing for new tenants in the center that will create a wider range of uses, including new professional services, and help to meet the short term needs of the center to fill vacant tenant spaces.

The Amendment is also in conformance with the 2009 Process and Overview Element of the Gaithersburg Master Plan, which includes as Guiding Strategies the following: "Diversify local economy so that approved development includes a variety of industries," "Include a mix of uses to create seven days a week activity with a balanced mix of commercial and residential uses," and "Ensure employment and commercial uses are sited in close proximity to residential areas." Process and Overview Element, pp. 5, 9. The Amendment proposes the introduction of new office and educational uses in the center, which will complement the existing retail uses, and these uses will be located proximate to the residential areas of Kentlands and Lakelands.

IV. REQUIRED FINDINGS

Section 24-160D.10(b) of the City of Gaithersburg's Zoning Ordinance ("Zoning Ordinance") requires the following findings for approval of a SDP:

1. *The plan is substantially in accord with the approved sketch plan*:

The Property is part of Sketch Plan Z-262, which covers approximately 353 acres and approves a maximum of 2200 residential units and 2.2 million square feet of non-residential uses, approximately 252,000 of which has been constructed on the Property. The Amendment proposes converting some existing retail space into office and educational uses, within the overall non-residential limits established by the Sketch Plan. The general commercial use and layout of the Property remains substantially the same. Therefore, the SDP is substantially in accord with the approved Sketch Plan.

2. The plan meets or accomplishes the purposes, objectives, and minimum standards and requirements of the MXD Zone:

Section 24-160D.1 of the Zoning Ordinance sets forth the objective of the MXD Zone as follows:

> *It is the objective of this zone to establish procedures and standards for the implementation of master plan land use recommendations for comprehensively planned, multi-use projects. It is also intended that this zone provide a more flexible approach to the comprehensive design and development of multi-use projects than the procedures and regulations applicable under the various conventional zoning categories. In so doing, it is intended that this zoning category be utilized to implement existing public plans and pertinent city policies in a manner and to a degree more closely compatible with said city plans and policies than may be possible under other zoning categories. The specific purposes of this zone are:*
>
> *(a) To establish standards and procedures through which the land use objectives and guidelines of approved and adopted master plans can serve as the basis for evaluating an individual development proposal, as well as ensuring that development proposed will implement the adopted master plan and other relevant planning and development policies and guidelines for the area considered for MXD zoning.*
>
> As noted above, the Property is in conformance with Master Plan recommendations for the Kentlands Boulevard Commercial District and the 2009 Process and Overview Element of the Gaithersburg Master Plan. The Amendment will provide for more diverse uses on the Property and allow for the leasing of currently vacant spaces in the center, creating employment opportunities and professional services in close proximity to existing residential areas.
>
> *(b) To encourage orderly, staged development of large-scale comprehensively planned, multi-use developments by providing procedures for various zoning and plan approvals, including development phasing.*
>
> The Amendment will allow the Applicant to address the short term needs of the center, ensuring its vitality through the integration of new uses, while also preserving the ability of the Applicant to later implement additional mixed-use development on the Property in accordance with the recommendations of the Master Plan.

(c) To encourage design flexibility and coordination of architectural style building and signage.

The Amendment does not propose any alterations to the existing buildings, previously approved by the City. Signage will be limited to tenant identification signs and will be processed as part of the site plan and permitting for the uses.

(d) To ensure the integration and internal and external compatibility of applicable residential and nonresidential uses by providing a suitable residential environment that is enhanced and complemented by uses such as commercial, recreational, open space, employment and institutional uses and amenities within a multi-use development. A multi-use development is defined as a single parcel or a group of contiguous parcels of land zoned MXD which, among the various parcels comprising that contiguous area, include residential, commercial, recreational, open space, employment and institutional uses and amenities.

The Property is located within the larger Kentlands and Lakelands communities, which include a variety of uses. The Amendment will provide additional services for adjoining and nearby residential developments.

(e) To assure compatibility of the proposed land uses with internal and surrounding uses by incorporating higher standards of land planning and site design than could be accomplished under conventional zoning categories and to provide a superior quality of development exceeding that which could be achieved under conventional zoning regulations and procedures.

As noted above, the Amendment will not alter the existing architecture or physical characteristics of the Property. Rather, the Amendment will increase the quality of the existing development by allowing for a better mix of tenants who will be able to fill vacant spaces within the center.

(f) To encourage the efficient use of land by: locating employment and retail uses convenient to residential areas; reducing reliance upon automobile use and encourage pedestrian and other nonvehicular circulation systems; retaining and providing useable open space and active recreation areas close to employment and residential populations; and providing for the development of comprehensive nonvehicular circulation networks, separated from vehicular roadways, which constitute a system of linkages among residential areas, open spaces, recreational areas, commercial and employment areas, and public facilities.

The Amendment will allow for the location of additional employment opportunities and commercial services within close proximity to existing residential areas.

(g) To provide superior natural environment by the preservation of trees, natural topographic and geologic features, wetlands, watercourses and open spaces.

The Amendment will have no impact on the natural environment or previous environmental approvals relating to the Property.

(h) *To allow development only in a phased or staged fashion to ensure the adequacy of the provision of public facilities and the concurrent implementation of community amenities.*

As described in the Statement of Adequate Public, all public facilities are readily available to the Property and sufficient for purposes of the Amendment.

Section 24-160D.2 of the Zoning Ordinance sets forth the minimum location and development requirements of the MXD Zone as follows:

(a) ***Master plan****. No land shall be classified in the Mixed Use Development Zone unless the land is within an area for which there is an approved and adopted master plan which recommends mixed use development for the land which is the subject of the application, or unless the proposed development otherwise satisfies the purposes and objectives of the MXD Zone. Approval of the MXD Zone for land which is not recommended for this zone in an approved master plan shall require the affirmative vote of four (4) members of the city council.*

The Property was previously approved for MXD zoning and the Amendment will not impact this classification.

(b) *Minimum area. No land shall be classified in the Mixed Use Development Zone unless it contains a minimum of ten (10) acres. Parcels or tracts less than the minimum acreage may be permitted if they are contiguous to an existing MXD zoned area and may be harmoniously integrated into the MXD area, consistent with the objectives and purposes of this zone. Such parcels are not required to contain multiple uses but should contribute to a multi-use development and are subject to the provisions of 24-160D.9(a)(1).*

The Property is part of an approximately 353 acre MXD area.

(c) *Location. Such land shall be located adjacent to and readily accessible from existing or planned highways that are in an approved construction program and are adequate to service the proposed development. It is intended that adequate access be available to such sites so that traffic does not have an adverse impact on the surrounding area or cause internal circulation or safety problems.*

The Property is in close proximity to Great Seneca Highway and Quince Orchard Road. As noted in the Statement of Adequate Public Facilities and Traffic Statement included in the application, the Amendment will reduce the traffic generated by the Property.

(d) *Public water and sewer. No development shall be permitted unless served by public water and sewer.*

The Property is currently served by all utilities, including public water and sewer.

(e) *Signage. Signage shall be coordinated between adjoining uses and be thematic in approach, in accord with the purposes of this zone and overall character of the surrounding area.*

Signage for the proposed uses will be for tenant identification and will be consistent with the signage approved for the remainder of Kentlands Market Square.

(f) *Frontage on public streets. Anything to the contrary notwithstanding in any regulation in this Code, lots in this zone shall not be required to have direct access to a public street provided that such condition will promote the creation of affordable housing, or will be designed in such a way as to foster the purposes and objectives of this zone, provided that satisfactory access to a public street is provided over private rights-of-way.*

The Property has direct access onto Kentlands Boulevard.

Section 24-160D.5 of the Zoning Ordinance sets forth the compatibility standards of the MXD zone as follows:

(a) *All uses shall conform to the purposes of the Mixed Use Development Zone and shall be compatible with all uses, existing or proposed, in the vicinity of the area covered by the proposed planned development. In order to assist in accomplishing such compatibility, the following requirements shall apply:*

(1) *All right-of-way requirements, setbacks, height limits, open space or buffer areas recommended in an area master plan or special conditions or requirements stated therein to protect properties adjacent to the MXD zoned areas shall be incorporated into all plans subject to approval under the zone.*

There are no special conditions or requirements for the Property in the Land Use Element or other City Master Plan elements and, as discussed above, the Amendment will not materially impact the physical characteristics of the site.

(2) *Where setback, height limits, open space or buffer areas are not recommended in an area master plan or special conditions or requirements stated therein to protect properties adjacent to the MXD zoned areas, the following requirements shall be incorporated into all plans subject to approval under this zone.*

a. *No buildings other than single-family detached dwellings shall be constructed within one hundred (100) feet of adjoining property not zoned MXD or in a residential category that is developed with one-family detached homes unless the city planning commission finds that topographical features permit a lesser setback. In all other situations,*

setbacks from adjoining properties may be less than one hundred (100) feet, with the setback approved by the city planning commission.

As noted above, the Amendment does not propose any new construction on the Property. Therefore, the provisions of this section are not applicable.

b. *No building proposed for commercial/employment/industrial use shall be constructed less than one hundred (100) feet from any adjoining property not zoned MXD recommended for residential zoning and land use on the applicable master plan. The setbacks shall be determined as part of the final site plan approval.*

As noted above, the Amendment does not propose any new construction on the Property. Therefore, the provisions of this section are not applicable.

c. *No building shall be constructed to a height greater than its distance from any adjoining property not zoned MXD recommended for residential zoning and land use of the applicable master plan, unless the city planning commission finds that approval of a waiver of this requirement will not adversely affect adjacent property.*

As noted above, the Amendment does not propose any new construction on the Property. Therefore, the provisions of this section are not applicable.

Section 24-160D.6 of the Zoning Ordinance establishes the minimum green area, landscaping and amenity requirements for the MXD Zone as follows:

(a) The amount of green area, including designated parks, public and private open space, active and passive recreational areas, required for the residential portion of a mixed use development shall be not less than forty (40) percent of the total area shown for residential use. … for the commercial/employment/industrial portion of a mixed use development shall be not less than twenty-five (25) percent of the total area devoted to commercial/employment/industrial uses, except that comparable amenities and/or facilities may be provided in lieu of green area if the city council determines that such amenities or facilities are sufficient to accomplish the purposes of the zone, and would be more beneficial to the proposed development than strict adherence to the specific green area requirement.

As noted above, the Amendment does not propose any new construction or additional site modifications. Therefore, the provisions of this section are not applicable.

(b) All recreation areas, facilities and amenities, and all open space and landscaped areas shall be reflected on the final site plans for approval by the city planning commission.

All facilities and amenities, and all open space and landscaped areas are shown on the SDP. These items will also be reflected on the final site plan for approval.

3. ***The plan is in accord with the area master plan and any accompanying special condition or requirements contained in said master plan for the area under consideration:***

As discussed above, the Amendment is in conformance with the Kentlands Boulevard Commercial District Master Plan. Additionally, the Amendment complies with a number of the Guiding Strategies of the City's Master Plan (2009 Process and Overview), including diversifying the local economy with a variety of industries, and accomplishes the City's objectives of promoting economic development, and increasing the City's tax base.

4. ***The plan will be internally and externally compatible and harmonious with existing and planned land uses in the MXD zone areas and adjacent areas:***

The Amendment is compatible and harmonious with existing and planned land uses. The Amendment will complement existing retail uses in the center and will provide additional services for adjacent residences in the Kentlands and Lakelands communities.

5. ***Existing or planned public facilities are adequate to service the proposed development contained in the plan:***

As mentioned above, and more fully described in the Statement of Adequate Public Facilities included in the application, the Property is currently adequately served by all utilities and public facilities.

6. ***The development staging or phasing program is adequate in relation to the provision of public facilities and private amenities to service the proposed development:***

No staging or phasing is required for implementation of the Amendment. Therefore, this section is not applicable.

7. ***The plan, if approved, would be in the public interest:***

The leasing of existing vacant spaces with desirable and compatible commercial uses is in the public interest. The proposed uses will ensure the vitality of the Property, create jobs, and increase the City's tax base.

V. CONCLUSION

Based on the foregoing, the Amendment is in compliance with the applicable Master Plan and zoning regulations pertaining to the Property. Therefore, approval of the Amendment is respectfully requested.