Gaithersburg
A CHARACTER COUNTS! CITY

# AMENDMENT #1

# INVITATION FOR BID

# No. 2015-004

---

**Effective:** October 30, 2014

**Project:** Water Park Roof Replacement and Bathhouse Renovation Project

**Issued By:** Sunil Prithviraj, Capital Projects Program Manager
Department of Public Works
800 Rabbit Road
Gaithersburg, Maryland 20878

Please be advised that Exhibit A (PLANS AND SPECIFICATIONS) of the Solicitation for the above project are hereby amended as follows:

1. The following drawings (Sheets) of Exhibit A are hereby amended and replaced by the drawings attached hereto, all of which are incorporated into and made part the Solicitation:

   - Sheet G100
   - Sheet AD101
   - Sheet A101
   - Sheet A103
   - Sheet A601
   - Sheet E101
   - Sheet E601
   - Sheet E602

2. The following specification sections of Exhibit A are hereby amended attached hereto, all of which are incorporated into and made part of the Solicitation:

   Cover Page
   Table of Contents
   Section 061000- Rough Carpentry
   Section 070150.19-Preparation for re-roofing
   Section 073113-Asphalt Shingles
   Section 075323-Ethylene-Propylene-Diene-Monomer (EPDM) Roofing
   Section 081113-Hollow Metal Doors and Frames
   Section 083323-Overhead Coiling Doors
   Section 086300-Metal-Framed Skylights
   Section 099113- Exterior Painting
   Architectural Cut Sheets for concrete floor finishes (DUR-A-FLEX)
   Lighting Fixture Cut Sheets
   Mechanical Cut sheets

# GAITHERSBURG WATER PARK PHASE III IMPROVEMNTS

512 S Frederick Ave Gaithersburg, MD 20877

CITY OF GAITHERSBURG, MARYLAND

## SHEET INDEX - Amendment 1


| Sheet Number | Sheet Name |
|---|---|
| G100 | COVER SHEET |
| AD101 | ARCHITECTURAL FLOOR PLAN - BATH HOUSE - DEMOLITION |
| A101 | ARCHITECTURAL FLOOR PLAN - BATH HOUSE |
| A103 | ARCHITECTURALPLANS - CONCESSION STAND & KIOSK |
| A401 | ENLARGED ARCHITECTURAL PLAN - QUEUE CONTROL |
| A402 | ENLARGED ARCHITECTURAL PLAN - BREEZEWAY |
| A601 | SCHEDULES |
| M100 | MECHANICAL NOTES, LEGENT, ABBREVIATIONS & SCHEDULES |
| M101 | MECHANICAL PLANS |
| E101 | ELECTRICAL NEW WORK PLAN |
| E601 | ELECTRICAL SCHEDULES |
| E602 | LIGHT FIXTURE SCHEDULE |


## SITE LOCATION

SCALE : NTS

N
W E
S

Gaithersburg
A CHARACTER COUNTS! CITY

**GAITHERSBURG WATER PARK PHASE III**

512 S Frederick Ave
Gaithersburg, MD 20877


NIKA ARCHITECTS +ENGINEERS

NIKA A+E

451 HUNGERFORD DRIVE (P)301.770.3520
4TH FLOOR (F)301.770.3521
ROCKVILLE, MD 20850 www.nika-ae.com


| No. | Description | Date |
|---|---|---|
| | | |
| | | |
| | | |
| | | |
| | | |
| | | |
| | | |
| | | |

Revisions

Drawing Title

COVER SHEET

Phase

CONCEPT 35% 65% 90% 100%

A/E Project Number 12.0009-011

Date 10.29.2014
-AMENDMENT 1

Drawing Scale: AS NOTED

CADD Filename Revit Model

CADD Plot Scale 1:1

Drawn By RA

Checked By AV

Sheet Number

G100

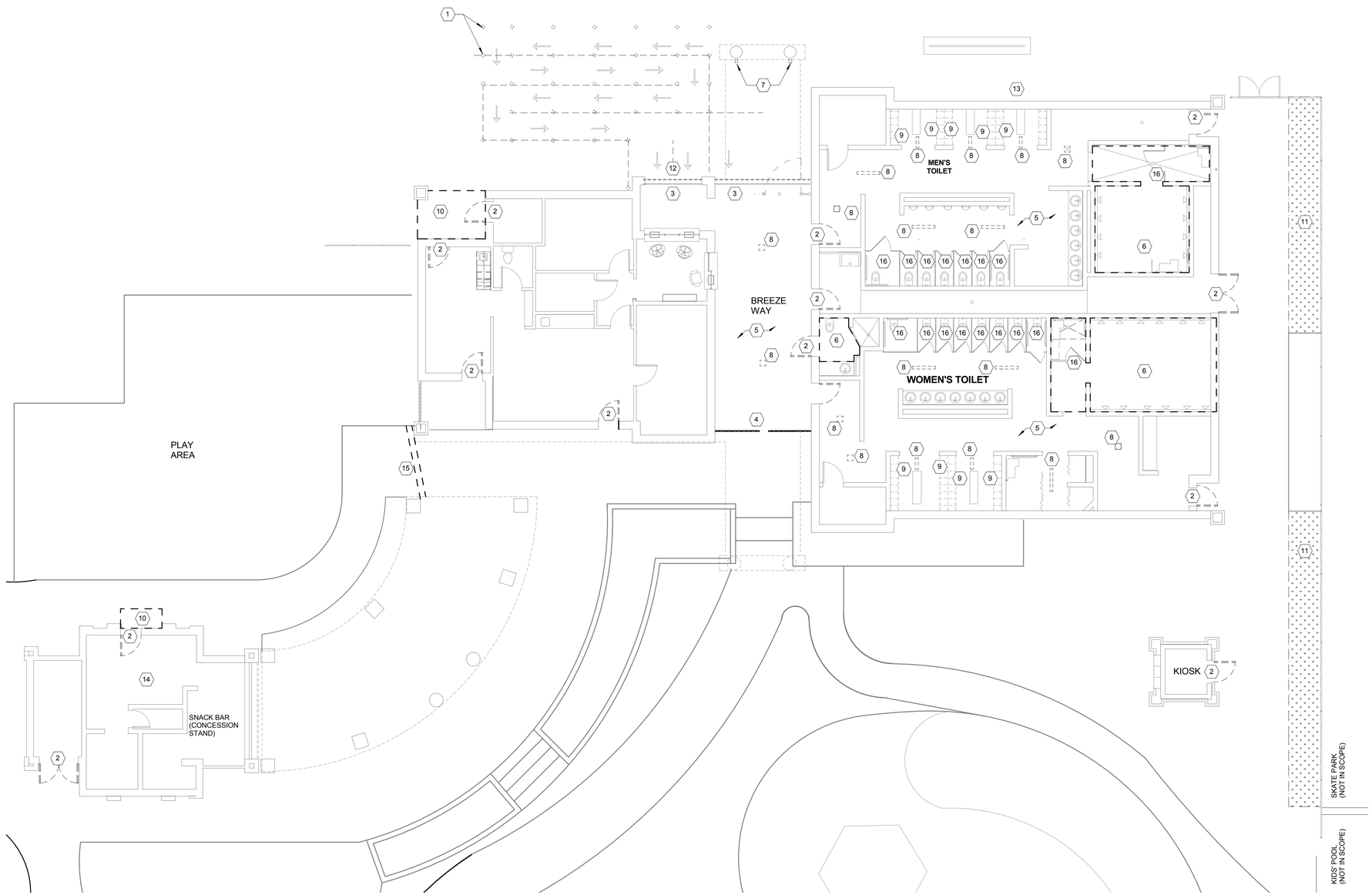


1 ARCHITECTURAL FLOOR PLAN - BATHHOUSE - DEMO
1/8" = 1'-0"

## # DEMOLITION NOTES

1. EXISTING EXTERIOR FIXED POLES TO BE REMOVED, AND RETURNED TO THE OWNER. DO NOT DISTURB REMOVABLE BOLLARDS IN BREEZEWAY.

2. REMOVE EXISTING EXTERIOR DOOR AND HARDWARE. PROTECT EXISTING FRAME AT ALL LOCATIONS.

3. REMOVE EXISTING ROLL-UP SHUTTER, GUIDE & MOTOR. MAINTAIN EXISTING STEEL TUBE COLUMNS. MAINTAIN POWER AND CONTROL CIRCUIT.

4. REMOVE EXISTING COLLAPSIBLE GATE.

5. PREPARE EXISTING FLOOR TO RECEIVE NEW FLOORING.

6. REMOVE EXISTING TILES AND BASE.

7. REMOVE EXISTING DOWNSPOUT AFTER FIRST BEND FROM GUTTER.

8. REMOVE EXISTING FLOOR DRAINS AT LOCATIONS INDICATED. SOW CUT AND REMOVE EXISTING SLAB AS REQUIRED TO RECEIVE NEW TRENCH DRAINS AND AREA DRAINS. COORDINATE WITH PLUMBING DRAWINGS.

9. REMOVE EXISTING LOCKERS, SUPPORT AND BLOCKING. SKIM COAT AND PREPARE WALLS TO RECEIVE NEW PAINT.

10. REMOVE EXISTING SLAB ON GRADE TO EXTENTS SHOWN. SOW CUT AT EXISTING JOINTS. PREPARE GROUND FOR NEW POUR.

11. REMOVE EXISTING VEGETATION PATCH AND PREPARE GROUND TO RECEIVE CONCRETE PAVEMENT.

12. REMOVE EXISTING "ENTRANCE" SIGNAGE ON EXTERIOR WALL ABOVE. DOCUMENT MOUNTING HEIGHT.

13. REMOVE EXISTING "WATER PARK" SIGNAGE ON EXTERIOR WALL ABOVE. DOCUMENT MOUNTING HEIGHT.

14. REMOVE EXISTING CEILING TILES, GRID SYSTEM, RECESSED LIGHT FIXTURES AND CEILING FANS IN CONCESSION STAND.

15. SOW CUT EXISTING SLAB FOR NEW CONDUITS. REFER TO ELECTRICAL DRAWINGS FOR COORDINATION.

16. DISMANTLE ALL EXISTING TOILET PARTITIONS FOR REUSE. CLEAN AND STORE SAFELY AWAY FROM CONSTRUCTION AREA.

Gaithersburg
A CHARACTER COUNTS! CITY

# GAITHERSBURG WATER PARK PHASE III

512 S Frederick Ave
Gaithersburg, MD 20877

NIKA ARCHITECTS +ENGINEERS
NIKA A+E
451 HUNGERFORD DRIVE (P)301.770.3520
4TH FLOOR (F)301.770.3521
ROCKVILLE, MD 20850 www.nika-ae.com

| No. | Description | Date |
|---|---|---|
| | | |
| | | |
| | | |
| | | |
| | | |
| | | |
| | | |
| | | |

Revisions

Drawing Title
ARCHITECTURAL FLOOR PLAN - BATH HOUSE - DEMOLITION

Phase
☐ CONCEPT ☐ 35% ☐ 65% ☐ 90% ■ 100%

A/E Project Number
12.0009-011

Date
10.29.2014
-AMENDMENT 1

Drawing Scale: AS NOTED

CADD Filename: Revit Model
CADD Plot Scale: 1:1

Drawn By: RA

Checked By: AV

Sheet Number
AD101

N
W E
S

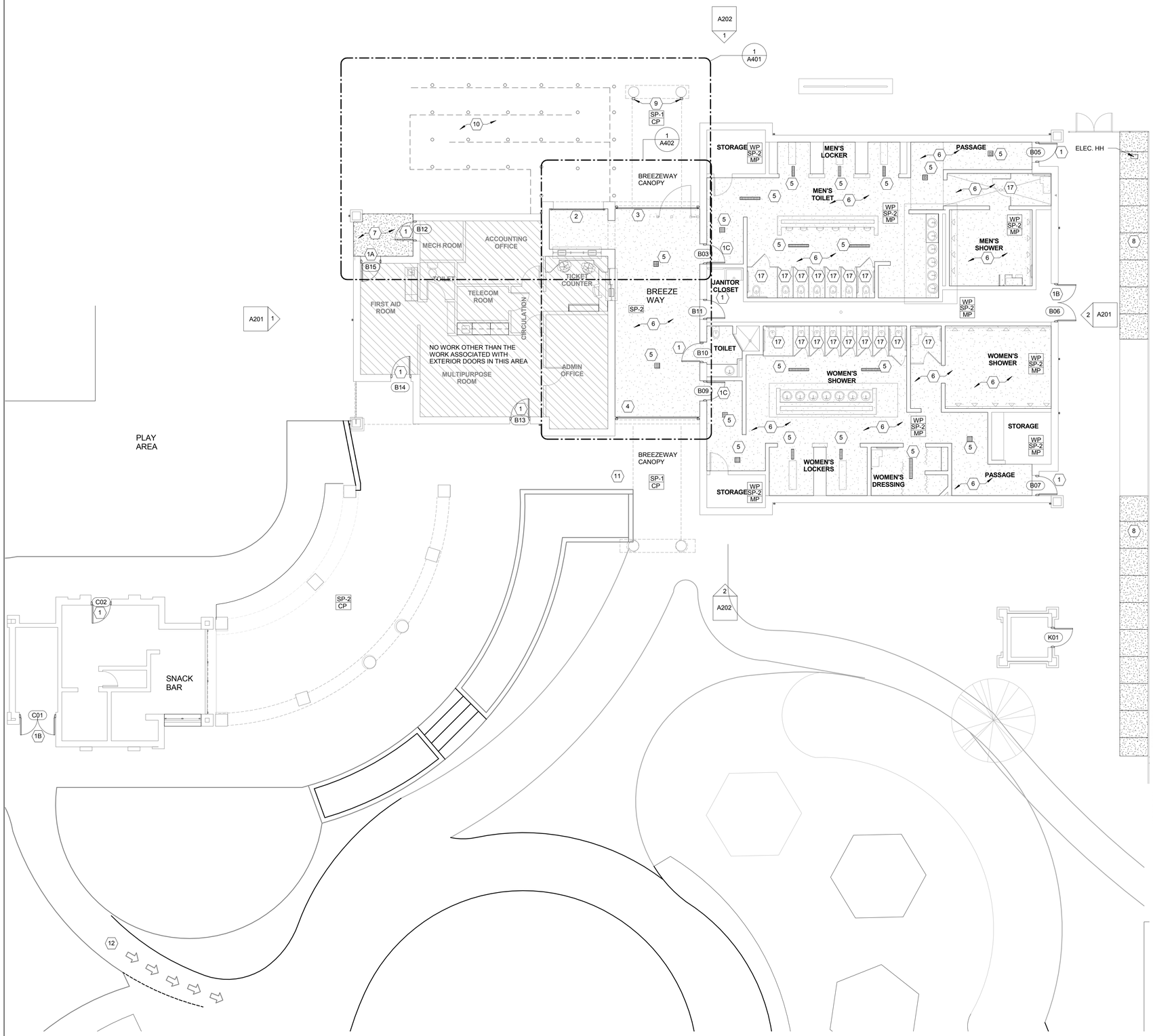


1 ARCHITECTURAL FLOOR PLAN - BATH HOUSE - NEW WORK
1/8" = 1'-0"

## # NEW WORK NOTES

1.INSTALL NEW HM EXTERIOR DOOR IN EXISTING FRAME. CONTRACTOR TO FIELD MEASURE EACH EXISTING DOOR AND PROCURE NEW DOOR TO EXACT SAME LENGTH AS EXISTING. i.e. UNDERCUT AS EXISTING. EXISTING FRAMES ARE FOR 7'-2" DOOR. INSTALL NEW WEATHER STRIPPING AND THRESHOLD TO MATCH EXISTING. INSTALL NEW HARDWARE. CONTRACTOR TO FIELD VERIFY EACH EXISTING MORTISE LOCKSETS TO ENSURE THAT NEW LOCKSETS MATCH EXISTING FUNCTIONALITY. NEW LOCKSETS SHALL BE CORBIN RUSSWIN®. NEW KEY SYSTEM TO MATCH EXISTING FACILITY STANDARD Medeco® KeyMark® SFIC (Small Format Interchangeable Core) 6PIN CYLINDERS. COORDINATE KEYING WITH THE FACILITY MAINTENANCE. INSTALL CONSTRUCTION CORES DURING CONSTRUCTION. DOOR CLOSER – LCN 4040XP SERIES SURFACE MOUNTED HEAVY DUTY WITH HOLD OPEN ARM. INSTALL 12" SS KICK PLATE AT THE DOORS" WHERE EXISTING DOORS HAVE KICK PLATE.

1A. INSTALL NEW CORBIN RUSSWIN® LOCKSET TO MATCH EXISTING FUNCTIONALITY. ADDITIONALLY, NEW LOCKSET WILL HAVE ACCESS CONTROL ELECTRIC STRIKE PLATE COMPATIBLE WITH MAGNETIC SWIPE CARD READER TO BE SELECTED AND INSTALLED BY FACILITY I.T. DEPARTMENT. NEW Medeco® KeyMark® SFIC (Small Format Interchangeable Core) 6PIN CYLINDERS HARDWARE KEY TO OVERRIDE ELECTRONIC ACCESS CONTROL. PREPARE EXISTING CMU WALL WITH INTERIOR JUNCTION BOX TO ELECTRIC STRIKE PLATE. INSTALL CONDUIT RUN AND JUNCTION BOX TO EXTERIOR OF WALL TO RECEIVE ACCESS CARD READER. INSTALL CONDUIT RUN FROM INTERIOR JUNCTION BOX TO TOP OF THE DOOR. DOOR CLOSER – LCN 4040XPT SERIES TOP JAMB MOUNT (PULL SIDE) HEAVY DUTY WITH HOLD OPEN ARM.

1B. INSTALL PAIR DOORS WITH ASTRAGAL. DOOR TO HAVE TOP AND BOTTOM FLUSH BOLTS. INSTALL LCN NON-HANDED LONG HOLD-OPEN ARM WITH STOP/HOLD OPEN HANDLE.

1C. INSTALL NEW HM EXTERIOR DOOR IN EXISTING FRAME. CONTRACTOR TO FIELD MEASURE EACH EXISTING DOOR AND PROCURE NEW DOOR TO EXACT SAME LENGTH AS EXISTING. i.e. UNDERCUT AS EXISTING. EXISTING FRAMES ARE FOR 7'-2" DOOR. INSTALL NEW WEATHER STRIPPING AND THRESHOLD TO MATCH EXISTING. INSTALL THUMB TURN (INTERIOR) WITH KEY OVERRIDE (EXTERIOR). INSTALL SS PULL HANDLE ON INTERIOR SIDE . NEW KEY SYSTEM TO MATCH EXISTING FACILITY STANDARD Medeco® KeyMark® SFIC (Small Format Interchangeable Core) 6PIN CYLINDERS. DOOR CLOSER – LCN 4040XP SERIES SURFACE MOUNTED HEAVY DUTY WITH HOLD OPEN ARM. INSTALL 12" SS KICK PLATE. INSTALL HOLD OPEN FLOOR BOLT.

2.INSTALL NEW MECHANICALLY (CHAIN) OPERATED STEEL ROLLUP DOOR WITH PADLOCKS IN BREEZEWAY. FIELD MEASURE EXISTING OPENING PRIOR TO ORDERING. ROLLUP DOOR ASSEMBLY TO BE FACTORY PAINTED. INSTALL PER MANUFACTURER'S INSTRUCTIONS.

3.INSTALL NEW MOTORIZED STEEL ROLLUP DOOR WITH MECHANICAL (CHAIN) OVERRIDE. ROLLUP DOOR TO BE LOCKABLE FROM INSIDE BREEZEWAY WITH PADLOCK. FIELD MEASURE EXISTING OPENING PRIOR TO ORDERING. ROLLUP DOOR ASSEMBLY TO BE FACTORY PAINTED. INSTALL PER MANUFACTURER'S INSTRUCTIONS.

4.INSTALL NEW MECHANICALLY (CHAIN) OPERATED ALUMINUM ROLLUP DOOR WITH PADLOCKS IN BREEZEWAY. FIELD MEASURE EXISTING OPENING PRIOR TO ORDERING. ROLLUP DOOR ASSEMBLY TO BE FACTORY PAINTED. INSTALL PER MANUFACTURER'S INSTRUCTIONS.

5.INSTALL NEW FLOOR DRAINS AT THE LOCATIONS OF EXISTING DRAINS. COORDINATE WITH PLUMBING DRAWINGS FOR SIZE AND TYPE OF DRAINS. LINEAR (TRENCH) SHAPED DRAINS WILL BE INSTALLED TO ALIGN WITH SLOPE OF FLOOR.

6.INSTALL NEW OWNER-SELECTED "DUR-A-QUARTZ Q28-17 with Armor top with Grit" FLOORING SYSTEM ON EXISTING CONCRETE SLAB. COLOR TO BE FINALIZED IN CONSULTATION WITH PROJECT MANAGER. PREPARE EXISTING SLAB PER MANUFACTURER'S SPECIFICATIONS TO RECEIVE NEW FLOORING. IF REQUIRED BY MANUFACTURER, EXPANSION JOINTS SHALL BE PROVIDED TO PREVENT CRACKING. INSTALL ADA COMPLIANT SMOOTH TRANSITION TO CONCRETE SLAB AT BOTH ENDS OF BREEZEWAY, AND OTHER LOCATIONS AS NECESSARY. INSTALL 4" INTEGRAL COVE BASE.

7.POUR NEW 7" THICK EXTERIOR PAVEMENT CONCRETE SLAB WITH 6" X6" W.W.F. OVER GRAVEL AND COMPACTED EARTH. TOP FINISH TO MATCH ADJACENT BROOM FINISH. SLOP AWAY FROM ENTRANCE DOOR.

8.POUR NEW 7" THICK EXTERIOR PAVEMENT CONCRETE SLAB WITH 6" X6" W.W.F. OVER GRAVEL AND COMPACTED EARTH. TOP FINISH TO MATCH ADJACENT BROOM FINISH. TOP OF NEW POUR TO FOLLOW THE GRADE OF ADJACENT BRICK-PAVERS. RELOCATE EXISTING ELECTRICAL HAND HOLE (HH) COVER TO TOP OF NEW POUR. CONCRETE STRENGTH TO BE 4000 PSI.

9.INSTALL NEW DOWNSPOUT SEGMENTS TO MATCH EXISTING WITH NEW BEND AT CROWN OF EXISTING CONCRETE COLUMN TO BRING NEW DOWNSPOUT CLOSER TO COLUMN. INSTALL NEW C.I. CONVERSION BOOT AT THE BOTTOM OF NEW DOWNSPOUT.

10.NEW PAINTED STEEL 42" BOLLARDS WITH CONCRETE FILL AND REMOVABLE STEEL CHAIN SYSTEM WITH VANDAL PROOF LOCKING. REFER TO ENLARGED PLAN.

11.INSTALL NEW PEDESTAL MOUNTED DIRECTIONAL SIGNAGE FOR ACCESSIBLE ROUTE TO POOL.

12. STRIPE AND PAINT EXISTING PAVEMENT WITH ROUTE POINTERS TOWARDS POOL AREA.

16. PATCH EXISTING SLAB AFTER NEW CONDUITS ARE IN PLACE.

17. REINSTALL PREVIOUSLY REMOVED TOILET PARTITIONS AND SECURE TO FLOOR. REINSTALL ALL HARDWARE. RESTORE TO ORIGINAL CONDITIONS.
.

Gaithersburg
A CHARACTER COUNTS! CITY

# GAITHERSBURG WATER PARK PHASE III

512 S Frederick Ave
Gaithersburg, MD 20877

NIKA ARCHITECTS +ENGINEERS
NIKA A+E
451 HUNGERFORD DRIVE (P)301.770.3520
4TH FLOOR (F)301.770.3521
ROCKVILLE, MD 20850 www.nika-ae.com

## GENERAL NOTES:

1. REFER TO SHEET A 601 FOR PAINT LEGEND.

| No. | Description | Date |
|---|---|---|
| | | |
| | | |
| | | |
| | | |
| | | |
| | | |
| | | |
| | | |

Revisions

Drawing Title
ARCHITECTURAL FLOOR PLAN - BATH HOUSE

Phase
☐ CONCEPT ☐ 35% ☐ 65% ☐ 95% ■ 100%

A/E Project Number: 12.0009-011
Date: 10.29.2014
-AMENDMENT 1
Drawing Scale: AS NOTED
CADD Filename: Revit Model
CADD Plot Scale: 1:1
Drawn By: RA
Checked By: AV
Sheet Number: A101

N
W E
S

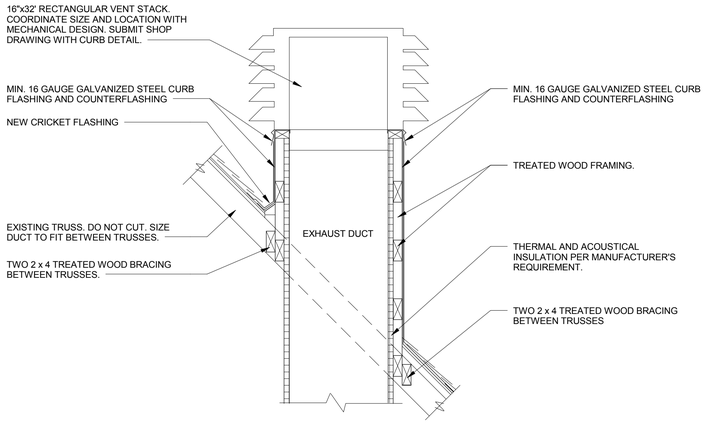


6 DETAIL - VENT STACK CURB
1" = 1'-0"

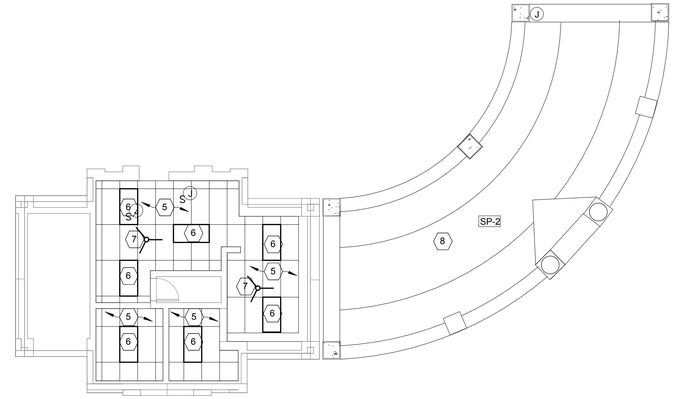


5 CONCESSION STAND CEILING AND SOFFIT PLAN
1/8" = 1'-0"

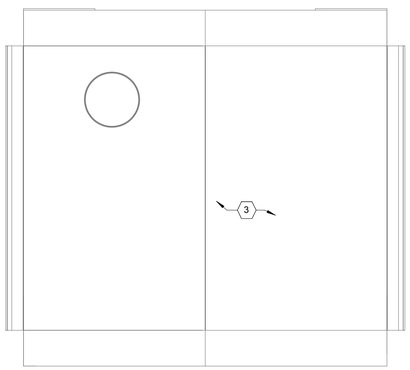


3 ARCHITECTURAL ROOF PLAN - KIOSK
1/2" = 1'-0"

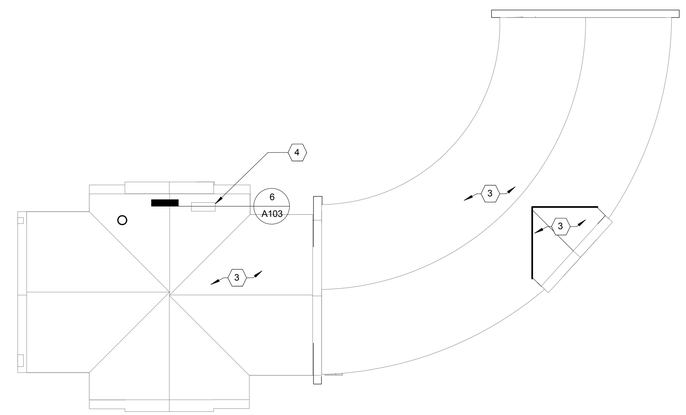


4 ARCHITECTURAL ROOF PLAN - CONCESSION STAND
1/8" = 1'-0"

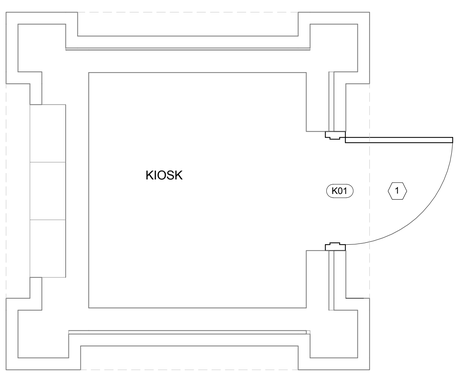


2 ARCHITECTURAL FLOOR PLAN - KIOSK
1/2" = 1'-0"

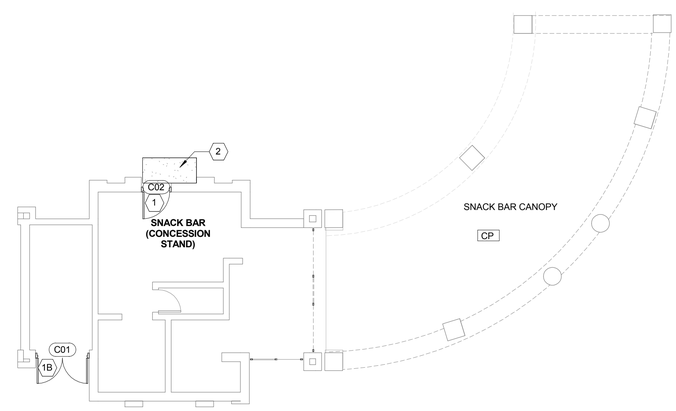


1 ARCHITECTURAL FLOOR PLAN - CONCESSION STAND
1/8" = 1'-0"

## # NEW WORK NOTES

1. INSTALL NEW HM EXTERIOR DOOR IN EXISTING FRAME. CONTRACTOR TO FIELD MEASURE EACH EXISTING DOOR AND PROCURE NEW DOOR TO EXACT SAME LENGTH AS EXISTING. i.e. UNDERCUT AS EXISTING. EXISTING FRAMES ARE FOR 7'-2" DOOR. INSTALL NEW WEATHER STRIPPING AND THRESHOLD TO MATCH EXISTING. INSTALL NEW HARDWARE. CONTRACTOR TO FIELD VERIFY EACH EXISTING MORTISE LOCKSETS TO ENSURE THAT NEW LOCKSETS MATCH EXISTING FUNCTIONALITY. NEW LOCKSETS SHALL BE CORBIN RUSSWIN®. NEW KEY SYSTEM TO MATCH EXISTING FACILITY STANDARD Medeco® KeyMark® SFIC (Small Format Interchangeable Core) 6PIN CYLINDERS. COORDINATE KEYING WITH THE FACILITY MAINTENANCE. INSTALL CONSTRUCTION CORES DURING CONSTRUCTION. DOOR CLOSER – LCN 4040XP SERIES SURFACE MOUNTED HEAVY DUTY WITH HOLD OPEN ARM. INSTALL 12" SS KICK PLATE AT THE DOORS" WHERE EXISTING DOORS HAVE KICK PLATE.

1B. INSTALL PAIR DOORS WITH ASTRAGAL. DOOR TO HAVE TOP AND BOTTOM FLUSH BOLTS. INSTALL LCN NON-HANDED LONG HOLD-OPEN ARM WITH STOP/HOLD OPEN HANDLE.

3. NEW ASPHALT SHINGLES ROOFING. INSTALL PER MANUFACTURER'S INSTRUCTIONS AND SPECIFICATIONS. INSTALL NEW PREFINISHED RIDGE, VALLEY AND STEP FLASHING. MINIMUM LAP LENGTH FOR FLASHING WILL BE 6".

4. NEW CURB SUPPORT, FLASHING AND COUNTER FLASHING FOR NEW ROOF TOP EXHAUST VENT. REFER TO MECHANICAL DRAWINGS FOR COORDINATION.

5. NEW PVC LAY IN CELLULAR CEILING TILES AND SUSPENSION GRID SYSTEM.

6. NEW PROCESSED LIGHT FIXTURES. REFER TO ELECTRICAL FOR ADDITIONAL INFORMATION.

7. NEW CEILING FANS. REFER TO ELECTRICAL FOR ADDITIONAL INFORMATION.

8. INSTALL NEW EXTERIOR GRADE PLYWOOD SHEATHING ON UNDERSIDE OF EXISTING "A" FRAME TRUSSES AT THE SNACK BAR CANOPY TO FORM A SOFFIT. SHEATHING TO RUN IN HORIZONTAL BENDS OF NO GREATER THAN 2 FEET HEIGHT ON INCLINED AND CURVED TRUSS ARRAY TO FORM SMOOTH SOFFIT SURFACE. PUTTY AND PREPARE TO RECEIVE PAINT AFTER NAILING. COMPLETELY COVER CANOPY SOFFIT STARTING FROM TOP OF EXISTING EIFS BULKHEAD. PROVIDE BLOCKING FOR NEW ELECTRICAL FIXTURE MOUNTING. INSTALL 12"X12" ACCESS PANELS AT JUNCTION BOXES AS NECESSARY. INSTALL 6 EACH 12"X12" VENTILATING GRILLES IN SOFFIT . COORDINATE NEW LIGHTING FIXTURE LAYOUT WITH ELECTRICAL.

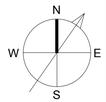


Gaithersburg
A CHARACTER COUNTS! CITY

# GAITHERSBURG WATER PARK PHASE III

512 S Frederick Ave
Gaithersburg, MD 20877

NIKA ARCHITECTS +ENGINEERS
NIKA A+E
451 HUNGERFORD DRIVE (P)301.770.3520
4TH FLOOR (F)301.770.3521
ROCKVILLE, MD 20850 www.nika-ae.com

## GENERAL NOTES

1. AT ALL TIMES DURING CONSTRUCTION, THE CONTRACTOR SHALL BE RESPONSIBLE FOR MAINTAINING SAFE WORKING ENVIRONMENT PER OSHA STANDARDS. ROOF INSTALLERS SHALL BE CERTIFIED AND EXPERIENCED. THE CREW MEMBERS AND SUPERVISORS SHALL WEAR ALL REQUIRED PERSONAL PROTECTION EQUIPMENT, SAFE SAFETY HARNESS, AND USE SECURED SHORING.

2. THE SUBSTRATE MUST BE SECURELY FASTENED TO STRUCTURE. IF IT IS FOUND UNSTABLE, IMMEDIATELY NOTIFY THE ARCHITECT AND THE OWNER.

3. THE SUBSTRATE MUST BE CLEAN, DRY, STRUCTURALLY SOUND, FREE OF LOOSE MATERIAL, VOIDS, PROJECTIONS, HOT SPOTS, RELEASE AGENTS, COATINGS, OR OTHER MATERIALS THAT MAY AFFECT ADHESION.

4. THERE SHALL BE NO PLANAR IRREGULARITIES GREATER THAN 6.4 MM (1/4 IN) WITHIN ANY 1.2 M (4 FT) RADIUS.

5. PRODUCTS AND INSTALLATION SHALL BE SUBJECTED TO A WRITTEN WARRANTY FROM THE CONTRACTOR FOR A PERIOD OF 20 YEARS MINIMUM, WITH PROVISION TO RENDER ALL SERVICES NECESSARY TO MITIGATE ANY AND ALL DAMAGE TO THE PROPERTY IF OCCURS DURING THE WARRANTED PERIOD DUE TO FAILURE OF ROOFING, AT NO COST TO THE GOVERNMENT (OWNER).

| No. | Description | Date |
|---|---|---|
| | | |
| | | |
| | | |
| | | |
| | | |
| | | |
| | | |
| | | |

Revisions

Drawing Title
ARCHITECTURALPLANS - CONCESSION STAND & KIOSK

Phase
CONCEPT 35% 60% 90% 100%

A/E Project Number 12.0009-011
Date 10.29.2014
-AMENDMENT 1
Drawing Scale: AS NOTED
CADD Filename Revit Model
CADD Plot Scale 1:1
Drawn By RA
Checked By AV
Sheet Number A103

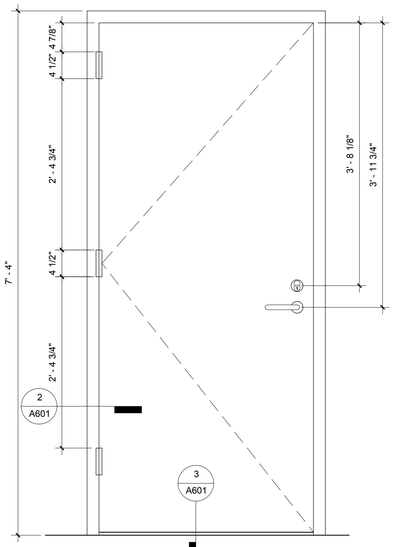


NOTES:

DIMENSIONS OF EXISTING DOOR ARE PROVIDED FOR REFERENCE ONLY. CONTRACTOR SHALL BE RESPONSIBLE TO FIELD MEASURE EXISTING DOORS PRIOR TO ORDERING.

1. EXISTING HINGES ARE MANUFACTURED BY H.SOSS. CONTRACTOR SHALL ENSURE THAT EXISTING FRAME AND HINGE SLOTS ARE NOT DAMAGED DURING INSTALLATION OF NEW DOOR.

1 EXISTING DOOR TYPICAL
1" = 1'-0"

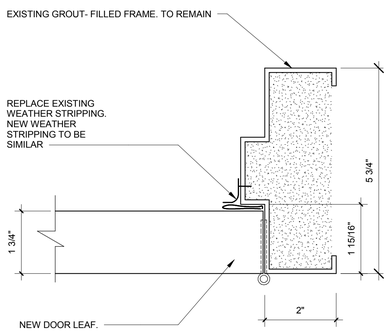


2 EXISTING FRAME TYPICAL
6" = 1'-0"

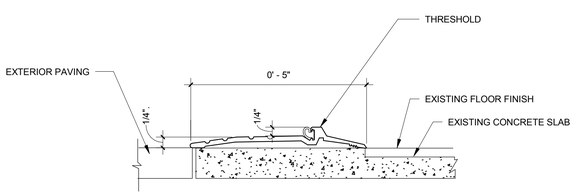


NOTE:

NEW THRESHOLD TO MATCH EXISTING

3 EXISTING THRESHOLD TYPICAL
6" = 1'-0"

## Door Schedule

| DESIGNATION | DOOR Count | Manufacturer | Height | Width | Thickness | Finish | Fire Rating | Function | LOUVER | Comments |
|---|---|---|---|---|---|---|---|---|---|---|
| B03 | 1 | MATCH EXISTING | 7' - 2" | 3' - 0" | 0' - 1 3/4" | PAINTED | N/A | Exterior | | 10" SS KICK PLATE ON BOTH SIDES |
| B05 | 1 | MATCH EXISTING | 7' - 2" | 3' - 0" | 0' - 1 3/4" | PAINTED | N/A | Exterior | INSTALL LOUVER | 10" SS KICK PLATE ON BOTH SIDES |
| B06 | 1 | MATCH EXISTING | 7' - 2" | 6' - 0" | 0' - 1 3/4" | PAINTED | N/A | Interior | | PAIR DOOR, 10" SS KICK PLATE ON BOTH SIDES |
| B07 | 1 | MATCH EXISTING | 7' - 2" | 3' - 0" | 0' - 1 3/4" | PAINTED | N/A | Exterior | | 10" SS KICK PLATE ON BOTH SIDES |
| B09 | 1 | MATCH EXISTING | 7' - 2" | 3' - 0" | 0' - 1 3/4" | PAINTED | N/A | Exterior | | |
| B10 | 1 | MATCH EXISTING | 7' - 2" | 3' - 0" | 0' - 1 3/4" | PAINTED | N/A | Exterior | INSTALL LOUVER | 10" SS KICK PLATE ON BOTH SIDES |
| B11 | 1 | MATCH EXISTING | 7' - 2" | 3' - 0" | 0' - 1 3/4" | PAINTED | N/A | Exterior | INSTALL LOUVER | 10" SS KICK PLATE ON BOTH SIDES |
| B12 | 1 | MATCH EXISTING | 7' - 2" | 3' - 0" | 0' - 1 3/4" | PAINTED | N/A | Exterior | | |
| B13 | 1 | MATCH EXISTING | 7' - 2" | 3' - 0" | 0' - 1 3/4" | PAINTED | N/A | Exterior | | |
| B14 | 1 | MATCH EXISTING | 7' - 2" | 3' - 0" | 0' - 1 3/4" | PAINTED | N/A | Exterior | | |
| B15 | 1 | MATCH EXISTING | 7' - 2" | 3' - 0" | 0' - 1 3/4" | PAINTED | N/A | Exterior | | PREPARE EXISTING FRAME TO RECIEVE ACCESS CONTROL |
| C01 | 1 | MATCH EXISTING | 7' - 2" | 5' - 8" | 0' - 1 3/4" | PAINTED | N/A | Interior | | PAIR DOOR, 10" SS KICK PLATE ON BOTH SIDES |
| C02 | 1 | MATCH EXISTING | 7' - 2" | 3' - 0" | 0' - 1 3/4" | PAINTED | N/A | Exterior | INSTALL LOUVER | 10" SS KICK PLATE ON BOTH SIDES |
| K01 | 1 | MATCH EXISTING | 7' - 2" | 3' - 0" | 0' - 1 3/4" | PAINTED | N/A | Exterior | INSTALL LOUVER | |

NOTES:

1. ALL NEW DOORS TO BE EXTERIOR HOLLOW METAL.
2. ALL HINGES WERE FIELD VERIFIED AS MANUFACTURED BY H.SOSS
3. IN FIELD ALL FRAMES MEASURE 7'-2" CLEAR OPENING BUT DOORS MEASURE SLIGHTLY LESS AT EACH LOCATION BASED ON THRESHOLD CONDITIONS. CONTRACTOR SHALL BE RESPONSIBLE FOR FIELD MEASURING EACH DOOR PRIOR TO ORDERING. ADDITIONALLY, CONTRACTOR SHALL BE RESPONSIBLE TO TAKE INTO CONSIDERATION NEW FLOORING WHERE OCCURS IN DETERMINING ACCURATE DOOR LEAF SIZE FOR ORDERING.
4. HARDWARE FUNCTIONALITY TO MATCH EXISTING AT EACH DOOR LOCATION. NEW MORTISE LOCKSETS WILL BE CORBIN RUSSWIN COMPATIBLE WITH FACILITY STANDARD Medeco KeyMark SIX CYLINDER Small Format Interchangeable Core (SFIC).

PRICING:

1. CONTRACTOR SHALL PRICE BASE BID WITH EXISTING FRAME TO REMAIN IN PLACE AND FIELD VERIFY TO CONFIRM PRIOR TO BIDDING IF IT IS POSSIBLE TO IDENTIFY MANUFACTURER AND ORDER NEW DOOR TO FIT INTO THE EXISTING FRAME WITHOUT STRUCTURAL DAMAGE. THIS IS PREFERRED OPTION.
2. IF IT IS NOT POSSIBLE TO PURCHASE NEW DOOR LEAVES THAT CAN FIT INTO EXISTING FRAME, THEN THE CONTRACTOR SHALL PROVIDE A BID ALTERNATE PRICE FOR REMOVING EXISTING FRAMES AND INSTALL NEW FRAMES WITH NEW DOORS. CONTRACTOR SHALL BE RESPONSIBLE FOR PREVENTING DAMAGE TO EXISTING BRICK AND CMU MASONRY

## Lockset Descriptions

| DESIGNATION | Lockset |
|---|---|
| B03 | THUMB TURN (PULL SIDE), KEY (PUSH SIDE), PUSH AND PULL PLATES WITH HANDLE |
| B05 | THUMB TURN (PUSH SIDE) KEY (PULL SIDE), PUSH AND PULL PLATES WITH HANDLE |
| B06 | MORTISE LOCK, TOP AND BOTTOM FLUSH BOLTS, HANDLE BOTH SIDES |
| B07 | THUMB TURN (PUSH SIDE) KEY (PULL SIDE), PUSH AND PULL PLATES WITH HANDLE |
| B09 | THUMB TURN (PULL SIDE), KEY (PUSH SIDE), PUSH AND PULL PLATES WITH HANDLE |
| B10 | MORTISE LOCKSET (RESTROOM) KEY (OUTSIDE), THUMB TURN INSIDE, HANDLE BOTH SIDES |
| B11 | MORTISE LOCKSET (CLOSET) KEY (OUTSIDE), THUMB TURN INSIDE, HANDLE BOTH SIDES |
| B12 | MORTISE LOCKSET (CLOSET) KEY (OUTSIDE), THUMB TURN INSIDE, HANDLE BOTH SIDES |
| B13 | MORTISE LOCK, KEY(OUTSIDE), HANDLE BOTH SIDES |
| B14 | MORTISE LOCK, KEY(OUTSIDE), HANDLE BOTH SIDES |
| B15 | ELECTRIC STRICKE WITH CARD READER MORTISE LOCK, KEY(OUTSIDE), HANDLE BOTH SIDES |
| C01 | MORTISE LOCK, TOP AND BOTTOM FLUSH BOLTS, HANDLE BOTH SIDES |
| C02 | MORTISE LOCK, KEY(OUTSIDE), HANDLE BOTH SIDES |
| K01 | MORTISE LOCKSET (CLOSET) KEY (OUTSIDE), THUMB TURN INSIDE, HANDLE BOTH SIDES |

LOCKSET DESCRIPTION NOTES:

1. ABOVE DESCRIPTIONS ARE PROVIDED AS A REFERENCE ONLY. CONTRACTOR SHALL BE RESPONSIBLE TO MATCH EXISTING FUNCTIONALITY AT EACH DOOR LOCATION.
2. REFER TO SHEET A 101 FOR DESCRIPTION OF CLOSER FOR EACH CONDITION.
3.

**PAINT LEGEND**

| KEY | APPLICATION | DESCRIPTION | COLOR |
|---|---|---|---|
| WP | CMU WALL-BATHHOUSE INTERIOR | HIGH BUILD EPOXY BASED PAINT (EXTERIOR GRADE) | OFF-WHITE (MATCH) |
| CP | CONCRETE COLUMNS -CANOPIES | HIGH BUILD EPOXY BASED PAINT (EXTERIOR GRADE) | MATCH GABLE EIFS COLOR |
| SP-1 | SOFFIT PAINT - BREEZEWAY CANOPIES (EXT.GYP.BOARD) | WATER BASED LATEX PAINT (EXTERIOR GRADE) | GRAY (MATCH) |
| SP-2 | SOFFIT PAINT - BREEZEWAY, BATHHOUSE CEILING, TRUSSES & SNACK BAR CANOPY (WOOD & PLYWOOD) | WATER BASED LATEX PAINT (EXTERIOR GRADE) | OFF-WHITE (MATCH) |
| MP | MISCELLANEOUS METAL - BATHHOUSE CEILING | ALKYD BASED LATEX PAINT (EXTERIOR GRADE) | OFF-WHITE |
| LIP | EXTERIOR GALVANIZED BOLLARDS | LIGHT INDUSTRIAL PAINT | BLACK |

NOTES:
1. REFER TO PAINT SPECIFICATIONS
2. ALL PAINT SYSTEMS TO BE COMPATIBLE WITH MATERIALS AND APPLICATIONS PER MPI STANDARDS
3. FINAL COLOR SELECTIONS ARE SUBJECT TO OWNER APPROVAL

Gaithersburg
A CHARACTER COUNTS! CITY

**GAITHERSBURG WATER PARK PHASE III**

512 S Frederick Ave
Gaithersburg, MD 20877

NIKA ARCHITECTS +ENGINEERS
NIKA A+E
451 HUNGERFORD DRIVE (P)301.770.3520
4TH FLOOR (F)301.770.3521
ROCKVILLE, MD 20850 www.nika-ae.com

| No. | Description | Date |
|---|---|---|
| | | |

Revisions

Drawing Title
SCHEDULES

Phase
CONCEPT 35% 60% 90% 100%

A/E Project Number 12.0009-011
Date 10.29.2014
-AMENDMENT 1
Drawing Scale: AS NOTED
CADD Filename Revit Model
CADD Plot Scale 1:1
Drawn By Author
Checked By Checker
Sheet Number A601

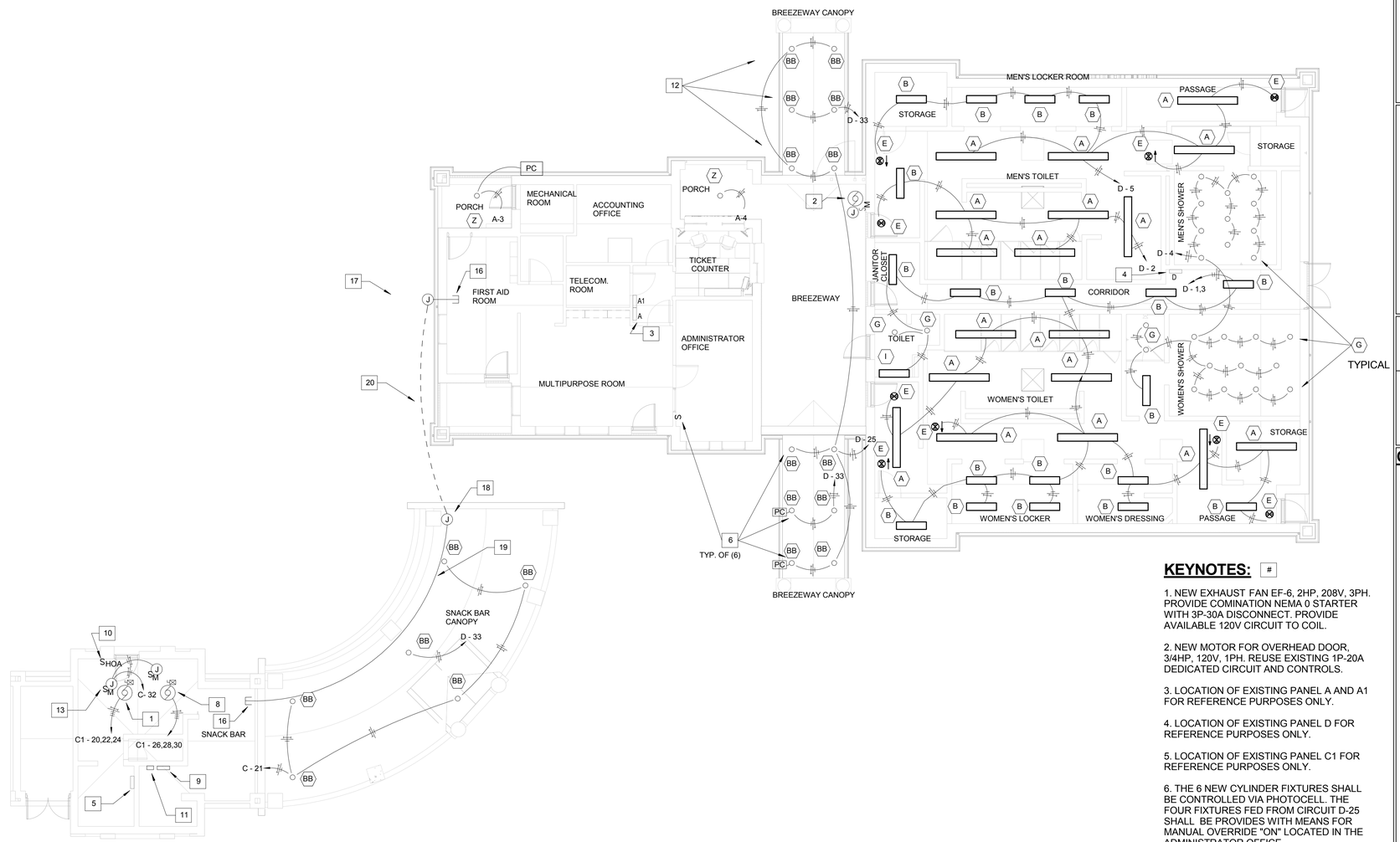


1 ELECTRICAL NEW WORK PLAN
1/8" = 1'-0"

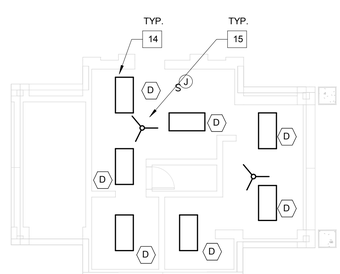


2 LIGHTING CONCESSION STAND NEW WORK CEILING PLAN
1/8" = 1'-0"

## KEYNOTES: #

1. NEW EXHAUST FAN EF-6, 2HP, 208V, 3PH. PROVIDE COMINATION NEMA 0 STARTER WITH 3P-30A DISCONNECT. PROVIDE AVAILABLE 120V CIRCUIT TO COIL.

2. NEW MOTOR FOR OVERHEAD DOOR, 3/4HP, 120V, 1PH. REUSE EXISTING 1P-20A DEDICATED CIRCUIT AND CONTROLS.

3. LOCATION OF EXISTING PANEL A AND A1 FOR REFERENCE PURPOSES ONLY.

4. LOCATION OF EXISTING PANEL D FOR REFERENCE PURPOSES ONLY.

5. LOCATION OF EXISTING PANEL C1 FOR REFERENCE PURPOSES ONLY.

6. THE 6 NEW CYLINDER FIXTURES SHALL BE CONTROLLED VIA PHOTOCELL. THE FOUR FIXTURES FED FROM CIRCUIT D-25 SHALL BE PROVIDES WITH MEANS FOR MANUAL OVERRIDE "ON" LOCATED IN THE ADMINISTRATOR OFFICE.

7. NEW LED WALL PACK LOCATED AT THE MAINTENANCE SHED 8" ABOVE THE DOOR FROM BOTTOM OF FIXTURE. TIE 3#12 AWG CONDUCTOR TO NEAREST AVAILABLE CIRCUIT. FIXTURE SHALL BE CONTROLLED VIA PHOTOCELL. LOCATION OF SHED DOES NOT REFLECT ACTUAL SITE DIMENSIONS. SHOWN FOR REFERENCE PURPOSES ONLY.

8. NEW EXHAUST FAN EF-6A. 3HP, 208V, 3PH. PROVIDE COMINATION NEMA 0 STARTER WITH 3P-30A DISCONNECT. PROVIDE AVAILABLE 120V CIRCUIT TO COIL.

9. NEW 200A 120/208V, 3PH, 4W, 42 POSITION PANELBOARD C. RECONNECT NEW PANELBOARD TO EXISTING FEEDER AND BRANCH WIRING. PROVIDE FEED THROUGH LUGS FOR NEW FEEDER SERVING PANEL C1 FROM NEW 150A MCB. SEE RISER FOR DETAILS.

10. NEW HANDS-OFF-AUTOMATIC 7 DAY PROGRAMMABLE CONTROLLER TO CONTROL EXHAUST FAN EF-6 AND EF-6A.

11. NEW ENCLOSED CIRCUIT BREAKER FEEDING PANELBOARD C1. SEE RISER FOR DETAILS.

12. THE 6 NEW CYLINDER FIXTURES ON THE PUBLIC SIDE OF THE BUILDING SHALL HAVE VANDAL RESISTANT ENCLOSURES.

13. 120V MOTORIZED DAMPER WITH MOTOR RATED SWITCH.

14. REPLACE EXISTING 2'X4' FLUORESCENT FIXTURE WITH NEW LED 2'X4'. RETAIN WIRING AND CONDUIT FOR REUSE.

15. REPLACE EXISTING CEILING FAN WITH NEW.

16. STUB (2) - 1" EMT CONDUIT ABOVE CEILING THROUGH EXTERIOR WALL DOWN TO WEATHERPROOF GASKET JUNCTION BOX MOUNTED 24" A.F.G.

17. ROUTE (2) - 1" PVC CONDUIT FROM JUNCTION BOX UNDERGROUND TO CANOPY COLUMN.

18. INSTALL PVC TO RGS 90° BEND TO ROUTE (2) -1" RGS CONDUIT TO WEATHERPROOF JUNCTION BOX LOCATED FLUSHED WITH NEW CEILING.

19. ROUTE (2) -1" EMT CONDUIT OVER RAFTERS TO SNACK BAR.

20. PVC CONDUIT TO BE BURIED UNDERNEATH GRADE AT A DEPTH NO LESS THAN 18" AND CONCRETE ENCASED SHALL REQUIRE CONCRETE ENVELOPE NOT LESS THAN 2" THICK AS PER NEC 300.5.

N
W E
S

Gaithersburg
A CHARACTER COUNTS! CITY

# GAITHERSBURG WATER PARK PHASE III

512 S Frederick Ave
Gaithersburg, MD 20877

NIKA ARCHITECTS +ENGINEERS
NIKA A+E
451 HUNGERFORD DRIVE (P)301.770.3520
4TH FLOOR (F)301.770.3521
ROCKVILLE, MD 20850 www.nika-ae.com

## GENERAL NOTES:

1. EXISTING WORK/EQUIPMENT IS SHOWN IN LIGHT LINES AND NEW WORK/EQUIPMENT IS SHOWN IN DARK LINES U.O.N.

2. MINIMUM SIZE DIAMETER EMT CONDUIT 1/2" WITH COMPRESSION TYPE FITTINGS.

3. EXISTING WIRING AND CONDUIT TO BE REUSED SHALL BE INSPECTED FOR DAMAGES AND REPLACED AS REQUIRED.

4. NEW LIGHT FIXTURES SHALL BE TIED TO EXISTING SWITCH BANK LOCATED IN THE TELECOM ROOM.

5. MOUNT NEW FIXTURES ON A ONE TO ONE BASIS REPLACING EXISTING.

6. ORIGINAL EMERGENCY LIGHTS SHALL BE REPLACED AND MATCHED WITH RECENTLY INSTALLED EMERGENCY LIGHTS.

7. LIGHTING WITHIN THE BATHHOUSE AND CANOPY ATTACHED TO SNACK BAR STAND IS TO BE PRICED AS AN ADD ALTERNATE.

| No. | Description | Date |
|---|---|---|
| | | |
| | | |
| | | |
| | | |
| | | |
| | | |
| | | |
| | | |

Revisions

Drawing Title
ELECTRICAL NEW WORK PLAN

Phase
CONCEPT 35% 60% 90% 100%

A/E Project Number 12.0009-011
Date 10.29.2014
-AMENDMENT 1
Drawing Scale: AS NOTED
CADD Filename Revit Model
CADD Plot Scale 1:1
Drawn By AM
Checked By MT
Sheet Number E101

## BRANCH PANEL: D

**Location:** Corridor
**Supply From:** MDP-14 (3P-200A)
**Mounting:** Surface
**Enclosure:** Type 1

**Volts:** 208/120
**Phases:** 3
**Wires:** 4

**A.I.C. Rating:** N/A
**Mains Type:** MLO
**Mains Rating:** 225 A
**MCB Rating:**

**Notes:**

| CKT | Circuit Description | Trip | Poles | A | | B | | C | | Poles | Trip | Circuit Description | CKT |
|---|---|---|---|---|---|---|---|---|---|---|---|---|---|
| 1 | Lighting (Corridor and Women's Toilet) | 20 A | 1 | 680 VA | 356 VA | | | | | 1 | 20 A | Lighting (Men's Toilet) | 2 |
| 3 | Lighting (Women's Lockers) | 20 A | 1 | | | 716 VA | 755 VA | | | 1 | 20 A | Lighting (Men's and Women's Shower) | 4 |
| 5 | Lighting (Men's Toilet and Lockers) | 20 A | 1 | | | | | 478 VA | 1500 VA | 1 | 20 A | Hand Dryer | 6 |
| 7 | Hand Dryer | 20 A | 1 | 1500 VA | 1500 VA | | | | | 1 | 20 A | Hand Dryer | 8 |
| 9 | Hand Dryer | 20 A | 1 | | | 1500 VA | 1500 VA | | | 1 | 20 A | Hand Dryer | 10 |
| 11 | Hand Dryer | 20 A | 1 | | | | | 1500 VA | 1500 VA | 1 | 20 A | Hand Dryer | 12 |
| 13 | Hand Dryer | 20 A | 1 | 1500 VA | 1500 VA | | | | | 1 | 20 A | Hand Dryer | 14 |
| 15 | Hand Dryer | 20 A | 1 | | | 1500 VA | 1500 VA | | | 1 | 20 A | Hand Dryer | 16 |
| 17 | Hand Dryer | 20 A | 1 | | | | | 1500 VA | 1500 VA | 1 | 20 A | Hand Dryer | 18 |
| 19 | Hand Dryer | 20 A | 1 | 1500 VA | 1500 VA | | | | | 1 | 20 A | Hand Dryer | 20 |
| 21 | Electric Water Cooler | 20 A | 1 | | | 500 VA | 1080 VA | | | 1 | 20 A | Receptacle | 22 |
| 23 | Receptacle | 20 A | 1 | | | | | 1080 VA | 500 VA | 1 | 20 A | Exhaust Fan #2 | 24 |
| 25 | Lighting (Breezeway) | 20 A | 1 | 232 VA | 0 VA | | | | | 1 | 0 A | Spare | 26 |
| 27 | Automatic Door Opener System | 20 A | 1 | | | 1000 VA | 500 VA | | | 1 | 20 A | Kiosk Lighting | 28 |
| 29 | Outdoor Receptacles | 20 A | 1 | | | | | 540 VA | 540 VA | 1 | 20 A | Outdoor Receptacles | 30 |
| 31 | Outdoor Receptacles | 20 A | 1 | 540 VA | 540 VA | | | | | 1 | 20 A | Outdoor Receptacles | 32 |
| 33 | Night Lighting (Outdoor) | 20 A | 1 | | | 145 VA | 500 VA | | | 1 | 20 A | Soap Dispenser Pump | 34 |
| 35 | Exhaust Fans | 20 A | 1 | | | | | 500 VA | 500 VA | 1 | 20 A | Gas Fired Water Heater | 36 |
| 37 | Spare | 0 A | 1 | 0 VA | 0 VA | | | | | 1 | 0 A | Spare | 38 |
| 39 | Spare | 0 A | 1 | | | 0 VA | 0 VA | | | -- | -- | Space | 40 |
| 41 | Space | -- | -- | | | | | 0 VA | 0 VA | -- | -- | Space | 42 |
| | | | | **Total Load:** | | 11.3 kVA | | 11.2 kVA | | 11.6 kVA | | | |
| | | | | **Total Amps:** | | 95 A | | 93 A | | 97 A | | | |

**Legend:**

| Load Classification | Connected Load | Demand Factor | Estimated Demand | Panel Totals | |
|---|---|---|---|---|---|
| Lighting | 3.4 kVA | 125.00% | 4.2 kVA | | |
| | | | | **Total Conn. Load:** | 34.2 kVA |
| | | | | **Total Est. Demand:** | 24.2 kVA |
| | | | | **Total Conn. Current:** | 95 A |
| | | | | **Total Est. Demand Current:** | 67 A |

**Notes:**

## BRANCH PANEL: C

**Location:** CONCESSION
**Supply From:** SWITCHBOARD MDP
**Mounting:** Surface
**Enclosure:** Type 1

**Volts:** 208/120
**Phases:** 3
**Wires:** 4

**A.I.C. Rating:** EXISTING
**Mains Type:** FEED THRU LUGS
**Mains Rating:** 200 A
**MCB Rating:** 175A

**Notes:**

| CKT | Circuit Description | Trip | Poles | A | | B | | C | | Poles | Trip | Circuit Description | CKT |
|---|---|---|---|---|---|---|---|---|---|---|---|---|---|
| 1 | CASH REGISTER | 20 A | 1 | 250 VA | 1500 VA | | | | | 1 | 20 A | HOT DOG WARMER | 2 |
| 3 | NACHO CHEESE DISPLAY | 20 A | 1 | | | 750 VA | 1200 VA | | | 1 | 20 A | POPCORN POPPER | 4 |
| 5 | ICE CREAM MAHCINE | 20 A | 1 | | | | | 1000 VA | 1500 VA | 1 | 20 A | MICROWAVE | 6 |
| 7 | REFRIGERATOR | 20 A | 1 | 1200 VA | 360 VA | | | | | 1 | 20 A | RECEPTACLE | 8 |
| 9 | FREEZER | 20 A | 1 | | | 1200 VA | 360 VA | | | 1 | 20 A | CANOPY LIGHTS | 10 |
| 11 | JUICER/SODA DISPENSER | 20 A | 1 | | | | | 1500 VA | 360 VA | 1 | 20 A | PRETZEL DISPLAY | 12 |
| 13 | COFFEE MACHINE | 20 A | 1 | 1200 VA | 360 VA | | | | | 1 | 20 A | CANOPY RECEPTACLE | 14 |
| 15 | OUTSIDE RECEPTACLE | 20 A | 1 | | | 360 VA | 360 VA | | | 1 | 20 A | OUTSIDE RECEPTACLE | 16 |
| 17 | OUTSIDE RECEPTACLE | 20 A | 1 | | | | | 360 VA | 360 VA | 1 | 20 A | CLOCK RECEPTACLE | 18 |
| 19 | LIGHTING | 20 A | 1 | 360 VA | 500 VA | | | | | 1 | 20 A | EXHAUST FAN | 20 |
| 21 | RECEPTACLE BY HOT WATER HEATER | 20 A | 1 | | | 360 VA | 120 VA | | | 1 | 20 A | CEILING FANS | 22 |
| 23 | SPARE IN HOT WATER ROOM | 20 A | 1 | | | | | 360 VA | 1500 VA | 2 | 30 A | HOT WATER | 24 |
| 25 | CANOPY RECEPTACLE | 20 A | 1 | 360 VA | 1500 VA | | | | | -- | -- | -- | 26 |
| 27 | 30 A. RECEPTACLE | 20 A | 1 | | | 2400 VA | 1200 VA | | | 2 | 30 A | ICE MACHINE | 28 |
| 29 | C1 (FEED THRU LUGS) | 0 A | 3 | | | | | 13933... | 1200 VA | -- | -- | -- | 30 |
| 31 | -- | -- | -- | 13933 VA | 1000 VA | | | | | 1 | 20 A | Kitchen Equipment - Non-Dwelling Unit | 32 |
| 33 | -- | -- | -- | | | 13933... | | | | | | | 34 |
| 35 | | | | | | | | | | | | | 36 |
| | | | **Total Load:** | 22.5 kVA | | 22.2 kVA | | 22.1 kVA | | | | | |
| | | | **Total Amps:** | 188 A | | 186 A | | 184 A | | | | | |

**Legend:**

| Load Classification | Connected Load | Demand Factor | Estimated Demand | Panel Totals | |
|---|---|---|---|---|---|
| Kitchen Equipment - Non-Dwelling Unit | 15.9 kVA | 65.00% | 10.3 kVA | | |
| | | | | **Total Conn. Load:** | 66.8 kVA |
| | | | | **Total Est. Demand:** | 61.4 kVA |
| | | | | **Total Conn. Current:** | 186 A |
| | | | | **Total Est. Demand Current:** | 171 A |

**Notes:**

## Branch Panel: C1

**Location:** CONCESSION
**Supply From:** PANEL C1
**Mounting:** Surface
**Enclosure:** Type 1

**Volts:** 208/120
**Phases:** 3
**Wires:** 4

**A.I.C. Rating:** EXISTING
**Mains Type:** MLO
**Mains Rating:** 200 A
**MCB Rating:**

**Notes:**

| CKT | Circuit Description | Trip | Poles | A | | B | | C | | Poles | Trip | Circuit Description | CKT |
|---|---|---|---|---|---|---|---|---|---|---|---|---|---|
| 1 | Space | -- | -- | 0.0 kVA | 0.0 kVA | | | | | -- | -- | Space | 2 |
| 3 | Space | -- | -- | | | 0.0 kVA | 0.0 kVA | | | -- | -- | Space | 4 |
| 5 | Space | -- | -- | | | | | 0.0 kVA | 0.0 kVA | -- | -- | Space | 6 |
| 7 | Space | -- | -- | 0.0 kVA | 0.0 kVA | | | | | -- | -- | Space | 8 |
| 9 | SUB PANEL | 60 A | 2 | | | 3.0 kVA | 1.5 kVA | | | 1 | 20 A | RECEPTACLE MICROWAVE | 10 |
| 11 | -- | -- | -- | | | | | 3.0 kVA | 1.5 kVA | 1 | 20 A | RECEPTACLE MICROWAVE | 12 |
| 13 | DEEP FRYER | 70 A | 3 | 6.0 kVA | 0.4 kVA | | | | | 1 | 20 A | RECEPTACLE STORAGE ROOM | 14 |
| 15 | -- | -- | -- | | | 6.0 kVA | 0.4 kVA | | | 1 | 20 A | RECEPTACLE STORAGE ROOM | 16 |
| 17 | -- | -- | -- | | | | | 6.0 kVA | 0.4 kVA | 1 | 20 A | RECEPTACLE | 18 |
| 19 | ICE CREAM MACHINE | 30 A | 2 | 0.8 kVA | 0.8 kVA | | | | | 3 | 20 A | EXHAUST FAN EF-6 | 20 |
| 21 | -- | -- | -- | | | 0.8 kVA | 0.8 kVA | | | -- | -- | -- | 22 |
| 23 | ICE CREAM MACHINE | 30 A | 2 | | | | | 0.8 kVA | 0.8 kVA | -- | -- | -- | 24 |
| 25 | -- | -- | -- | 0.8 kVA | 0.9 kVA | | | | | 3 | 20 A | EXHAUST FAN EF-6A | 26 |
| 27 | DEEP FRYER | 70 A | 3 | | | 6.0 kVA | 0.9 kVA | | | -- | -- | -- | 28 |
| 29 | -- | -- | -- | | | | | 6.0 kVA | 0.9 kVA | -- | -- | -- | 30 |
| 31 | -- | -- | -- | 6.0 kVA | 0.0 kVA | | | | | -- | -- | Space | 32 |
| 33 | Space | -- | -- | | | 0.0 kVA | 0.0 kVA | | | -- | -- | Space | 34 |
| 35 | Space | -- | -- | | | | | 0.0 kVA | 0.0 kVA | -- | -- | Space | 36 |
| 37 | | | | | | | | | | | | | 38 |
| 39 | | | | | | | | | | | | | 40 |
| 41 | | | | | | | | | | | | | 42 |
| | | | **Total Load:** | 15.6 kVA | | 19.3 kVA | | 19.3 kVA | | | | | |
| | | | **Total Amps:** | 130 A | | 166 A | | 166 A | | | | | |

**Legend:**

| Load Classification | Connected Load | Demand Factor | Estimated Demand | Panel Totals | |
|---|---|---|---|---|---|
| Kitchen Equipment - Non-Dwelling Unit | 42.0 kVA | 65.00% | 27.3 kVA | | |
| Motor | 5.1 kVA | 113.31% | 5.7 kVA | **Total Conn. Load:** | 54.2 kVA |
| Power | 6.0 kVA | 100.00% | 6.0 kVA | **Total Est. Demand:** | 40.1 kVA |
| Receptacle | 1.1 kVA | 100.00% | 1.1 kVA | **Total Conn.:** | 150 A |
| | | | | **Total Est. Demand:** | 111 A |

**Notes:**

Gaithersburg
A CHARACTER COUNTS! CITY

# GAITHERSBURG WATER PARK PHASE III

512 S Frederick Ave
Gaithersburg, MD 20877


NIKA ARCHITECTS +ENGINEERS
NIKA A+E
451 HUNGERFORD DRIVE (P)301.770.3520
4TH FLOOR (F)301.770.3521
ROCKVILLE, MD 20850 www.nika-ae.com


| No. | Description | Date |
|---|---|---|
| | | |
| | | |
| | | |
| | | |
| | | |
| | | |
| | | |
| | | |

Revisions

Drawing Title
ELECTRICAL SCHEDULES

Phase
CONCEPT 35% 65% 90% 100%

A/E Project Number 12.0009-011
Date 10.29.2014 -AMENDMENT 1
Drawing Scale: AS NOTED
CADD Filename Revit Model
CADD Plot Scale 1:1
Drawn By AM
Checked By FL
Sheet Number E601

LUMINARIES SCHEDULE

| TYPE LETTER | FIXTURE TYPE | MOUNTING | MOUNTING HEIGHT (A.F.F.) | VOLTS | LAMP DATA | | | CATALOG NO. | NOTES |
|---|---|---|---|---|---|---|---|---|---|
| | | | | | NOMINAL WATTS | TYPE | MANUFACTURER | | |
| A | FLUXSTREAM 8' LED LINEAR | CEILING MOUNTED | 10'-0" | 120 | 81 | LED | PHILIPS LIGHTING OR APPROVED EQUAL | LF-8-10-41-40-U-LAG | |
| B | FLUXSTREAM 4' LED LINEAR | CEILING MOUNTED | 10'-0" | 120 | 40.5 | LED | PHILIPS LIGHTING OR APPROVED EQUAL | LF-4-10-41-40-U-LAG | |
| D | DAYLED LED TROFFER 2X4 | CEILING RECESSED GRID | 10'-0" | 120 | 78 | LED | PHILIPS LIGHTING OR APPROVED EQUAL | 2-LT-G-71L-840-4-21-UNV | |
| E | EXIT SIGN | CEILING OR WALL MOUNTED | 10'-0" | 120 | 3.12 | LED | PHILIPS LIGHTING OR APPROVED EQUAL | VERW | |
| G | COREPRO LED RETROFIT DOWNLIGHT | CEILING RECESSED | 10'-0" | 120 | 7.9 | LED | PHILIPS LIGHTING OR APPROVED EQUAL | CP-4-30K-6-P4R | |
| I | DECORATIVE LED WALL SCONCE BATHROOM FIXTURE | WALL MOUNTED | 8'-0" | 120 | 8 | LED | PHILIPS LIGHTING OR APPROVED EQUAL | PW-01-LW-40-SA-U-SA02L | |
| J | DUSK TO DAWN LED LUMINARE | WALL MOUNTED | 8" ABOVE DOOR FRAME | 120 | 39 | LED | PHILIPS LIGHTING OR APPROVED EQUAL | DTD-LED-1C-5K-120-GY3S-P | FINISH TO MATCH EXISTING |
| Z | G3 LED CANOPY | CEILING MOUNTED | 7'-0" | 120 | 55 | LED | PHILIPS LIGHTING OR APPROVED EQUAL | G3-3-1-55LA-161A-NW-120-BRP-PCB | VANDAL RESISTANT FIXTURE |
| BB | CALCULITE 7" LED CYLINDER | CEILING MOUNTED | 14'-0" (BREEZEWAY) 12'-0" (SNACK BAR) | 120 | 69.2 | LED | PHILIPS LIGHTING OR APPROVED EQUAL | C7L-50-C-W-40K-Z10V-M-CCD-U-VB | FIXTURE TO BE MOUNTED DIRECTLY TO OUTLET BOX TO PROVIDE ADDITIONAL RESISTANCE TO VANDALISM. MOUNTING KIT C7-CW-B. |

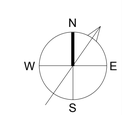


Gaithersburg
A CHARACTER COUNTS! CITY

**GAITHERSBURG WATER PARK PHASE III**

512 S Frederick Ave
Gaithersburg, MD 20877


NIKA ARCHITECTS +ENGINEERS

NIKA A+E

451 HUNGERFORD DRIVE (P)301.770.3520
4TH FLOOR (F)301.770.3521
ROCKVILLE, MD 20850 www.nika-ae.com


| No. | Description | Date |
|---|---|---|
| | | |
| | | |
| | | |
| | | |
| | | |
| | | |
| | | |
| | | |

Revisions

Drawing Title

LIGHT FIXTURE SCHEDULE

Phase

☐ CONCEPT ☐ 35% ☐ 65% ☐ 95% ■ 100%

A/E Project Number 12.0009-011

Date 10.29.2014
AMENDMENT 1

Drawing Scale: AS NOTED

CADD Filename Revit Model

CADD Plot Scale 1:1

Drawn By AM

Checked By FL

Sheet Number

**E602**

City of Gaithersburg

# Water Park Roof Replacement and Bathhouse Renovation Project Amendment -1

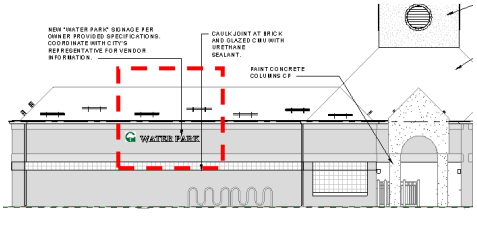

NIKA ARCHITECTS + ENGINEERS

451 Hungerford Drive, 4th Floor
Rockville, MD 20850
301.770.3520 TEL
301.770.3521 FAX
www.nika-ae.com WEB

LEADING DESIGN. EXPERT RESULTS.

# Table of Contents (Amendment 1)

**Architectural Specifications** ..... TAB 1

061000 - ROUGH CARPENTRY

070150.19 - PREPARATION FOR RE-ROOFING

073113 - ASPHALT SHINGLES

075323 FL - ETHYLENE-PROPYLENE-DIENE-MONOMER (EPDM) ROOFING

081113 FL - HOLLOW METAL DOORS AND FRAMES

083323 FL - OVERHEAD COILING DOORS

086300 FL - METAL-FRAMED SKYLIGHTS

099113 FL - EXTERIOR PAINTING

**Product Data Sheets**

Architectural Cut Sheets ..... Tab 2

Bathhouse floor finish: DUR-A-QUARTZ Q28-17 with Armor top with Grit

Rollup Shutter basis of design product litrature

Lighting Fixture Cut Sheets ..... Tab 3

Type D Fixture

Mechanical Cut Sheets ..... TAB 4

Inline exhaust Fans

Vent stack

Ceiling Register

# Tab 1 – Architectural Specifications

# SECTION 061000 - ROUGH CARPENTRY

## PART 1 - GENERAL

### 1.1 RELATED DOCUMENTS

A. Drawings and general provisions of the Contract, including General and Supplementary Conditions and Division 01 Specification Sections, apply to this Section.

### 1.2 SUMMARY

A. Section Includes:

1. Framing with dimension lumber.
2. Framing with timber.
3. Wood blocking, cants, and nailers.
4. Wood furring and grounds.
5. Wood sleepers.

B. Related Requirements:
1. Division 07 Section 075323 FL - ETHYLENE-PROPYLENE-DIENE-MONOMER (EPDM) ROOFING
2. Division 07 Section "073113" ASPHALT SHEATHING

### 1.3 DEFINITIONS

A. Exposed Framing: Framing not concealed by other construction.

B. Dimension Lumber: Lumber of 2 inches nominal (38 mm actual) or greater but less than 5 inches nominal (114 mm actual) in least dimension.

C. Timber: Lumber of 5 inches nominal (114 mm actual) or greater in least dimension.

D. Lumber grading agencies, and the abbreviations used to reference them, include the following:

1. NeLMA: Northeastern Lumber Manufacturers' Association.
2. NLGA: National Lumber Grades Authority.
3. SPIB: The Southern Pine Inspection Bureau.
4. WCLIB: West Coast Lumber Inspection Bureau.
5. WWPA: Western Wood Products Association.

### 1.4 ACTION SUBMITTALS

Product Data: For each type of process and factory-fabricated product. Indicate component materials and dimensions and include construction and application details.

1. Include data for wood-preservative treatment from chemical treatment manufacturer and certification by treating plant that treated materials comply with requirements. Indicate type of preservative used and net amount of preservative retained.
2. For products receiving a waterborne treatment, include statement that moisture content of treated materials was reduced to levels specified before shipment to Project site.
3. Include copies of warranties from chemical treatment manufacturers for each type of treatment.

B. Fastener Patterns: Full-size templates for fasteners in exposed framing.

## 1.5 INFORMATIONAL SUBMITTALS

A. Material Certificates: For dimension lumber specified to comply with minimum allowable unit stresses. Indicate species and grade selected for each use and design values approved by the ALSC Board of Review.

B. Evaluation Reports: For the following, from ICC-ES:

1. Wood-preservative-treated wood.
2. Power-driven fasteners.
3. Powder-actuated fasteners.
4. Expansion anchors.
5. Metal framing anchors.

## 1.6 QUALITY ASSURANCE

A. Testing Agency Qualifications: For testing agency providing classification marking for fire-retardant treated material, an inspection agency acceptable to authorities having jurisdiction that periodically performs inspections to verify that the material bearing the classification marking is representative of the material tested.

## 1.7 DELIVERY, STORAGE, AND HANDLING

A. Stack lumber flat with spacers beneath and between each bundle to provide air circulation. Protect lumber from weather by covering with waterproof sheeting, securely anchored. Provide for air circulation around stacks and under coverings.

# PART 2 - PRODUCTS

## 2.1 WOOD PRODUCTS, GENERAL

1. Dimension lumber framing.
2. Timber.
3. Rim boards.
4. Miscellaneous lumber.

B. Lumber: DOC PS 20 and applicable rules of grading agencies indicated. If no grading agency is indicated, provide lumber that complies with the applicable rules of any rules-writing agency certified by the ALSC Board of Review. Provide lumber graded by an agency certified by the ALSC Board of Review to inspect and grade lumber under the rules indicated.

1. Factory mark each piece of lumber with grade stamp of grading agency.
2. Where nominal sizes are indicated, provide actual sizes required by DOC PS 20 for moisture content specified. Where actual sizes are indicated, they are minimum dressed sizes for dry lumber.
3. Provide dressed lumber, S4S, unless otherwise indicated.

C. Maximum Moisture Content of Lumber: 19 percent for 2-inch nominal (38-mm actual) thickness or less, 19 percent for more than 2-inch nominal (38-mm actual) thickness unless otherwise indicated.

## 2.2 WOOD-PRESERVATIVE-TREATED LUMBER

A. Preservative Treatment by Pressure Process: AWPA U1; Use Category UC2 for interior construction not in contact with the ground, Use Category UC3b for exterior construction not in contact with the ground, and Use Category UC4a for items in contact with the ground.

1. Preservative Chemicals: Acceptable to authorities having jurisdiction and containing no arsenic or chromium. Retain subparagraph below for exposed framing if considered necessary.
2. For exposed items indicated to receive a stained or natural finish, use chemical formulations that do not require incising, contain colorants, bleed through, or otherwise adversely affect finishes.

B. Kiln-dry lumber after treatment to a maximum moisture content of 19 percent. Do not use material that is warped or that does not comply with requirements for untreated material.

C. Mark lumber with treatment quality mark of an inspection agency approved by the ALSC Board of Review.

D. Application: Treat all rough carpentry unless otherwise indicated. Retain first subparagraph below if Project includes wood adjacent to roofing or waterproofing.

1. Wood cants, nailers, curbs, equipment support bases, blocking, stripping, and similar members in connection with roofing, flashing, vapor barriers, and waterproofing.
2. Wood sills, sleepers, blocking, and similar concealed members in contact with masonry or concrete.

## 2.3 DIMENSION LUMBER FRAMING

A. Load-Bearing Partitions: Construction or No. 2 grade.

1. Application: Exterior walls.
2. Species:

a. Hem-fir (north); NLGA.
b. Douglas fir-larch; WCLIB or WWPA.
c. Mixed southern pine; SPIB.
d. Spruce-pine-fir; NLGA.
e. Douglas fir-south; WWPA.
f. Hem-fir; WCLIB or WWPA.
g. Douglas fir-larch (north); NLGA.
h. Spruce-pine-fir (south); NeLMA, WCLIB, or WWPA.

B. Load-Bearing Partitions: Any species and grade with a modulus of elasticity of at least 1,500,000 psi (10 350 MPa).

1. Application: Exterior walls.

C. Ceiling Joists: Construction or No. 2.

a. Hem-fir (north); NLGA.
b. Douglas fir-larch; WCLIB or WWPA.
c. Douglas fir-larch (north); NLGA.
d. Mixed southern pine; SPIB.
e. Spruce-pine-fir; NLGA.
f. Hem-fir; WCLIB or WWPA.
g. Douglas fir-south; WWPA.
h. Spruce-pine-fir (south); NeLMA, WCLIB, or WWPA.
i. Northern species; NLGA.
j. Eastern softwoods; NeLMA.
k. Western woods; WCLIB or WWPA.

D. Joists, Rafters, and Other Framing Not Listed Above: Construction or No. 2 grade.

1. Species:

a. Hem-fir (north); NLGA.
b. Douglas fir-larch; WCLIB or WWPA.
c. Mixed southern pine; SPIB.
d. Spruce-pine-fir; NLGA.
e. Douglas fir-south; WWPA.
f. Hem-fir; WCLIB or WWPA.
g. Douglas fir-larch (north); NLGA.
h. Spruce-pine-fir (south); NeLMA, WCLIB, or WWPA.

## 2.4 TIMBER FRAMING

A. Provide timber framing complying with the following requirements, according to grading rules of grading agency indicated:

1. Species and Grade: Douglas fir-larch, Douglas fir-larch (north), or Douglas fir-south; No. 1 grade; NLGA, WCLIB, or WWPA.
2. Species and Grade: eastern hemlock-tamarack (north); No. 1 grade; NeLMA or NLGA.

3. Species and Grade: Hem-fir or hem-fir (north); No. 1 grade; NLGA, WCLIB, or WWPA.

## 2.5 MISCELLANEOUS LUMBER

A. General: Provide miscellaneous lumber indicated and lumber for support or attachment of other construction, including the following:

1. Blocking.
2. Nailers.
3. Cants.
4. Furring.

B. For items of dimension lumber size, provide Construction or No. 2and the following species:

1. Hem-fir (north); NLGA.
2. Mixed southern pine; SPIB.
3. Spruce-pine-fir; NLGA.
4. Hem-fir; WCLIB or WWPA.
5. Spruce-pine-fir (south); NeLMA, WCLIB, or WWPA.
6. Western woods; WCLIB or WWPA.
7. Northern species; NLGA.
8. Eastern softwoods; NeLMA.

C. For concealed boards, provide lumber with 19 percent maximum moisture content and any of the following species and grades:

1. Mixed southern pine; No. 3 grade; SPIB.
2. Hem-fir or hem-fir (north); Standard or No. 3 Common grade; NLGA, WCLIB, or WWPA.
3. Spruce-pine-fir (south) or spruce-pine-fir; Standard or No. 3 Common grade; NeLMA, NLGA, WCLIB, or WWPA.

D. For blocking and nailers used for attachment of other construction, select and cut lumber to eliminate knots and other defects that will interfere with attachment of other work.

## 2.6 FASTENERS

A. General: Provide fasteners of size and type indicated that comply with requirements specified in this article for material and manufacture.

1. Where rough carpentry is exposed to weather, in ground contact, pressure-preservative treated, or in area of high relative humidity, provide fasteners complying with ASTM A 153/A 153M of Type 316 stainless steel.

B. Nails, Brads, and Staples: ASTM F 1667.

C. Power-Driven Fasteners: NES NER-272.

D. Wood Screws: ASME B18.6.1.

E. Lag Bolts: ASME B18.2.1 (ASME B18.2.3.8M).

F. Bolts: Steel bolts complying with ASTM A 307, Grade A (ASTM F 568M, Property Class 4.6); with ASTM A 563 (ASTM A 563M) hex nuts and, where indicated, flat washers.

G. Expansion Anchors: Anchor bolt and sleeve assembly of material indicated below with capability to sustain, without failure, a load equal to six times the load imposed when installed in unit masonry assemblies and equal to four times the load imposed when installed in concrete as determined by testing per ASTM E 488 conducted by a qualified independent testing and inspecting agency.

1. Material: Carbon-steel components, zinc plated to comply with ASTM B 633, Class Fe/Zn 5.
2. Material: Stainless steel with bolts and nuts complying with ASTM F 593 and ASTM F 594, Alloy Group 1 or 2 (ASTM F 738M and ASTM F 836M, Grade A1 or A4).

## 2.7 METAL FRAMING ANCHORS

A. Basis-of-Design Product: Subject to compliance with requirements, provide comparable product by one of the following:

1. Cleveland Steel Specialty Co.
2. KC Metals Products, Inc.
3. Phoenix Metal Products, Inc.
4. Simpson Strong-Tie Co., Inc.
5. USP Structural Connectors.

B. Allowable Design Loads: Provide products with allowable design loads, as published by manufacturer, that meet or exceed those of products of manufacturers listed. Manufacturer's published values shall be determined from empirical data or by rational engineering analysis and demonstrated by comprehensive testing performed by a qualified independent testing agency.

C. Galvanized-Steel Sheet: Hot-dip, zinc-coated steel sheet complying with ASTM A 653/A 653M, G60 (Z180) coating designation.

1. Use for interior locations unless otherwise indicated.

D. Hot-Dip, Heavy-Galvanized Steel Sheet: ASTM A 653/A 653M; structural steel (SS), high-strength low-alloy steel Type A (HSLAS Type A), or high-strength low-alloy steel Type B (HSLAS Type B); G185 (Z550) coating designation; and not less than 0.036 inch (0.9 mm) thick.

1. Use for wood-preservative-treated lumber and where indicated.

E. Stainless-Steel Sheet: ASTM A 666, Type 316.

1. Use for exterior locations and where indicated.

F. Joist Hangers: U-shaped joist hangers with 2-inch- (50-mm-) long seat and 1-1/4-inch- (32-mm-) wide nailing flanges at least 85 percent of joist depth.

1. Thickness: 0.050 inch (1.3 mm).

G. I-Joist Hangers: U-shaped joist hangers with 2-inch- (50-mm-) long seat and 1-1/4-inch- (32-mm-) wide nailing flanges full depth of joist. Nailing flanges provide lateral support at joist top chord.

1. Thickness: 0.050 inch (1.3 mm).

H. Top Flange Hangers: U-shaped joist hangers, full depth of joist, formed from metal strap with tabs bent to extend over and be fastened to supporting member.

1. Strap Width: 1-1/2 inches (38 mm).
2. Thickness: 0.050 inch (1.3 mm).

I. Bridging: Rigid, V-section, nailless type, 0.050 inch (1.3 mm) thick, length to suit joist size and spacing.

J. Post Bases: Adjustable-socket type for bolting in place with standoff plate to raise post 1 inch (25 mm) above base and with 2-inch- (50-mm-) minimum side cover, socket 0.062 inch (1.6 mm) thick, and standoff and adjustment plates 0.108 inch (2.8 mm) thick.

K. Joist Ties: Flat straps, with holes for fasteners, for tying joists together over supports.

1. Width: 3/4 inch (19 mm).
2. Thickness: 0.050 inch (1.3 mm).
3. Length: 16 inches (400 mm).

L. Rafter Tie-Downs: Bent strap tie for fastening rafters or roof trusses to wall studs below, 1-1/2 inches (38 mm) wide by 0.050 inch (1.3 mm) thick Rafter Tie-Downs (Hurricane or Seismic Ties): Bent strap tie for fastening rafters or roof trusses to wall studs below, 2-1/4 inches (57 mm) wide by 0.062 inch (1.6 mm) thick. Tie fits over top of rafter or truss and fastens to both sides of rafter or truss, face of top plates, and side of stud below.

M. Hold-Downs: Brackets for bolting to wall studs and securing to foundation walls with anchor bolts or to other hold-downs with threaded rods and designed with first of two bolts placed seven bolt diameters from reinforced base.

1. Bolt Diameter: 5/8 inch (15.8 mm).
2. Width: 2-1/2 inches (64 mm).
3. Body Thickness: 0.108 inch (2.8 mm).
4. Base Reinforcement Thickness: 0.108 inch (2.8 mm).

N. Wall Bracing: T-shaped bracing made for letting into studs in saw kerf, 1-1/8 inches (29 mm) wide by 9/16 inch (14 mm) deep by 0.034 inch (0.85 mm) thick with hemmed edges.

O. Wall Bracing: Angle bracing made for letting into studs in saw kerf, 15/16 by 15/16 by 0.040 inch (24 by 24 by 1 mm) thick with hemmed edges.

## 2.8 MISCELLANEOUS MATERIALS

A. Adhesives for Gluing Furring and Sleepers to Concrete or Masonry: Formulation complying with ASTM D 3498 that is approved for use indicated by adhesive manufacturer.

# PART 3 - EXECUTION

## 3.1 INSTALLATION, GENERAL

A. Set rough carpentry to required levels and lines, with members plumb, true to line, cut, and fitted. Fit rough carpentry to other construction; scribe and cope as needed for accurate fit. Locate furring, nailers, blocking, ground**s,** and similar supports to comply with requirements for attaching other construction.

B. Framing Standard: Comply with AF&PA's WCD 1, "Details for Conventional Wood Frame Construction," unless otherwise indicated.

C. Metal Framing Anchors: Install metal framing anchors to comply with manufacturer's written instructions. Install fasteners through each fastener hole.

D. Install sill sealer gasket to form continuous seal between sill plates and foundation walls.

E. Do not splice structural members between supports unless otherwise indicated.

F. Provide blocking and framing as indicated and as required to support facing materials, fixtures, specialty items, and trim.

G. Provide fire blocking in furred spaces, stud spaces, and other concealed cavities as indicated and as follows:
   1. Fire block concealed spaces of wood-framed walls and partitions at each floor level, at ceiling line of top story, and at not more than 96 inches (2438 mm) o.c. Where fire blocking is not inherent in framing system used, provide closely fitted solid wood blocks of same width as framing members and 2-inch nominal- (38-mm actual-) thickness.
   2. Fire block concealed spaces behind combustible cornices and exterior trim at not more than 20 feet (6 m) o.c.

H. Sort and select lumber so that natural characteristics will not interfere with installation or with fastening other materials to lumber. Do not use materials with defects that interfere with function of member or pieces that are too small to use with minimum number of joints or optimum joint arrangement.

I. Comply with AWPA M4 for applying field treatment to cut surfaces of preservative-treated lumber.

   1. Use inorganic boron for items that are continuously protected from liquid water.

2. Use copper naphthenate for items not continuously protected from liquid water.

J. Securely attach rough carpentry work to substrate by anchoring and fastening as indicated, complying with the following:

1. NES NER-272 for power-driven fasteners.
2. Table 2304.9.1, "Fastening Schedule," in ICC's International Building Code.

K. Use galvanized.G60 steel common nails unless otherwise indicated. Select fasteners of size that will not fully penetrate members where opposite side will be exposed to view or will receive finish materials. Make tight connections between members. Install fasteners without splitting wood. Drive nails snug but do not countersink nail heads unless otherwise indicated.

L. For exposed work, arrange fasteners in straight rows parallel with edges of members, with fasteners evenly spaced, and with adjacent rows staggered.

## 3.2 WOOD GROUND, SLEEPER, BLOCKING, AND NAILER INSTALLATION

A. Install where indicated and where required for attaching other work. Form to shapes indicated and cut as required for true line and level of attached work. Coordinate locations with other work involved.

B. Attach items to substrates to support applied loading. Recess bolts and nuts flush with surfaces unless otherwise indicated.

C. Where wood-preservative-treated lumber is installed adjacent to metal decking, install continuous flexible flashing separator between wood and metal decking.

## 3.3 WOOD FURRING INSTALLATION

A. Install level and plumb with closure strips at edges and openings. Shim with wood as required for tolerance of finish work.

B. Furring to Receive Plywood or Hardboard Paneling: Install 1-by-3-inch nominal- (19-by-63-mm actual-) size furring at 24 inches (610 mm) o.c.

## 3.4 WALL AND PARTITION FRAMING INSTALLATION

A. General: Provide single bottom plate and double top plates using members of 2-inch nominal (38-mm actual) thickness whose widths equal that of studs, except single top plate may be used for non-load-bearing partitions. Fasten plates to supporting construction unless otherwise indicated.

1. For exterior walls, provide framing as shown on drawings.

B. Frame openings with multiple studs and headers. Provide nailed header members of thickness equal to width of studs. Support headers on jamb studs.

END OF SECTION 061000

# SECTION 070150.19 - PREPARATION FOR RE-ROOFING

## PART 1 - GENERAL

### 1.1 RELATED DOCUMENTS

A. Drawings and general provisions of the Contract, including General and Supplementary Conditions and Division 01 Specification Sections, apply to this Section.

### 1.2 SUMMARY

A. Section Includes:

1. Roof tear-off.
2. Temporary roofing membrane.
3. Roof re-cover preparation.
4. Removal of base flashings.

B. Related Sections:

### 1.3 MATERIALS OWNERSHIP

A. Except for items or materials indicated to be reused, reinstalled, or otherwise indicated to remain Owner's property, demolished materials shall become Contractor's property and shall be removed from Project site.

### 1.4 DEFINITIONS

A. Roofing Terminology: Refer to ASTM D 1079 and glossary in NRCA's "The NRCA Roofing and Waterproofing Manual" for definition of terms related to roofing work in this Section.

B. Existing Membrane Roofing System: Built-up asphalt, Asphalt Shingles, and Adhered Bituminous roofing membrane, roof insulation, surfacing, and components and accessories between deck and roofing membrane.

C. Roof Re-Cover Preparation: Existing roofing membrane that is to remain and be prepared for reuse.

D. Roof Tear-Off: Removal of existing membrane roofing system from deck.

E. Partial Roof Tear-Off: Removal of a portion of existing membrane roofing system from deck or removal of selected components and accessories from existing membrane roofing system.

F. Remove: Detach items from existing construction and legally dispose of them off-site unless indicated to be removed and reinstalled.

G. Existing to Remain: Existing items of construction that are not indicated to be removed.

## 1.5 SUBMITTALS

A. Product Data: For each type of product indicated.

B. Temporary Roofing: Include Product Data and description of temporary roofing system. If temporary roof will remain in place, submit surface preparation requirements needed to receive permanent roof, and submit a letter from roofing membrane manufacturer stating acceptance of the temporary membrane and that its inclusion will not adversely affect the roofing system's resistance to fire and wind

C. Fastener pull-out test report.

D. Photographs or Videotape: Show existing conditions of adjoining construction and site improvements, including exterior and interior finish surfaces, that might be misconstrued as having been damaged by reroofing operations. Submit before Work begins.

E. Landfill Records: Indicate receipt and acceptance of hazardous wastes, such as asbestos-containing material, by a landfill facility licensed to accept hazardous wastes.

F. Qualification Data: For Installer including certificate that Installer is licensed is approved by warrantor of existing roofing system.

## 1.6 QUALITY ASSURANCE

A. Installer Qualifications: Installer of new membrane roofing systemapproved by warrantor of existing roofing system to work on existing roofing.

B. Regulatory Requirements: Comply with governing EPA notification regulations before beginning membrane roofing removal. Comply with hauling and disposal regulations of authorities having jurisdiction.

C. Reroofing Conference: Conduct conference at Project site

1. Meet with Owner; Architect; Owner's insurer if applicable; testing and inspecting agency representative; roofing system manufacturer's representative; deck Installer; roofing Installer including project manager, superintendent, and foreman; and installers whose work interfaces with or affects reroofing including installers of roof accessories and roof-mounted equipment.
2. Review methods and procedures related to roofing system tear-off and replacement including, but not limited to, the following:

    a. Reroofing preparation, including membrane roofing system manufacturer's written instructions.
    b. Temporary protection requirements for existing roofing system that is to remain during and after installation.

c. Existing roof drains and roof drainage during each stage of reroofing, and roof drain plugging and plug removal requirements.
d. Construction schedule and availability of materials, Installer's personnel, equipment, and facilities needed to make progress and avoid delays.
e. Existing deck removal procedures and Owner notifications.
f. Condition and acceptance of existing roof deck and base flashing substrate for reuse.
g. Structural loading limitations of deck during reroofing.
h. Base flashings, special roofing details, drainage, penetrations, equipment curbs, and condition of other construction that will affect reroofing.
i. HVAC shutdown and sealing of air intakes.
j. Shutdown of fire-suppression, -protection, and -alarm and -detection systems.
k. Asbestos removal and discovery of asbestos-containing materials.
l. Governing regulations and requirements for insurance and certificates if applicable.
m. Existing conditions that may require notification of Architect before proceeding.

## 1.7 PROJECT CONDITIONS

A. Owner will occupy portions of building immediately below reroofing area. Conduct reroofing so Owner's operations will not be disrupted. Provide Owner with not less than 72 hours' notice of activities that may affect Owner's operations.

1. Coordinate work activities daily with Owner so Owner can place protective dust or water leakage covers over sensitive equipment or furnishings, shut down HVAC and fire-alarm or -detection equipment if needed, and evacuate occupants from below the work area.
2. Before working over structurally impaired areas of deck, notify Owner to evacuate occupants from below the affected area. Verify that occupants below the work area have been evacuated before proceeding with work over the impaired deck area.

B. Protect building to be reroofed, adjacent buildings, walkways, site improvements, exterior plantings, and landscaping from damage or soiling from reroofing operations.

C. Maintain access to existing walkways, corridors, and other adjacent occupied or used facilities.

D. Conditions existing at time of inspection for bidding will be maintained by Owner as far as practical.

1. A roof moisture survey of existing membrane roofing system is available for Contractor's reference.
2. The results of an analysis of test cores from existing membrane roofing system are available for Contractor's reference.
3. Construction Drawingsfor existing roofing system are available and will be provided if requested for Contractor's reference. Contractor is responsible for conclusions derived from existing documents.

E. Limit construction loads on roof to 35 lb/wheel rooftop equipment wheel loads and 50 psf for uniformly distributed loads.

F. Weather Limitations: Proceed with reroofing preparation only when existing and forecasted weather conditions permit Work to proceed without water entering existing roofing system or building.

G. Hazardous Materials: It is not expected that hazardous materials such as asbestos-containing materials will be encountered in the Work.

1. Hazardous materials will be removed by Owner before start of the Work. Existing roof will be left no less watertight than before removal.
2. If materials suspected of containing hazardous materials are encountered, do not disturb; immediately notify Architect and Owner. Hazardous materials will be removed by Owner under a separate contract.

H. Hazardous Materials: Present in building to be reroofed. A report on the presence of hazardous materials is on file for review and use. Examine report to become aware of locations where hazardous materials are present.

1. Hazardous material remediation is specified elsewhere in the Contract Documents.
2. Do not disturb hazardous materials or items suspected of containing hazardous materials except according to procedures specified elsewhere in the Contract Documents.
3. Coordinate with hazardous material remediation subcontractor to prevent water from entering existing roofing system or building.

## 1.8 WARRANTY

A. Existing Warranties: Remove, replace, patch, and repair materials and surfaces cut or damaged during reroofing, by methods and with materials so as not to void existing roofing system warranty. Notify warrantor before proceeding.

1. Notify warrantor of existing roofing system on completion of reroofing, and obtain documentation verifying that existing roofing system has been inspected and warranty remains in effect. Submit documentation at Project closeout.

# PART 2 - PRODUCTS

## 2.1 INFILL MATERIALS

A. Use infill materials matching existing membrane roofing system materials unless otherwise indicated.

## 2.2 TEMPORARY ROOFING MATERIALS

A. Design and selection of materials for temporary roofing are responsibilities of Contractor.

B. Sheathing Paper: Red-rosin type, minimum 3 lb/100 sq. ft. (0.16 kg/sq. m).

C. Base Sheet: ASTM D 4601, Type II, nonperforated, asphalt-impregnated and -coated, glass-fiber sheet.

D. Glass-Fiber Felts: ASTM D 2178, Type IV, asphalt-impregnated, glass-fiber felt.

E. Asphalt Primer: ASTM D 41.

F. Roofing Asphalt: ASTM D 312, Type III or IV.

## 2.3 RECOVER BOARDS

A. Recover Board: ASTM C 208, Type II, Grade [**1**] [**2**], cellulosic-fiber insulation board; 1/2 inch (13 mm) thick.

B. Recover Board: Fan-folded, unfaced, extruded-polystyrene board insulation; [**3/16-inch (5-mm)**] [**1/4-inch (6-mm)**] [**3/8-inch (10-mm)**] nominal thickness.

C. Recover Board: ASTM C 1177/C 1177M, glass-mat, water-resistant gypsum substrate; **1/2 inch (13 mm)** thick.

D. Recover Board: ASTM C 1278/C 1278M, cellulosic-fiber-reinforced, water-resistant gypsum substrate; **1/2 inch (13 mm)** thick.

E. Fasteners: Factory-coated steel fasteners, No. 14, and metal or plastic plates listed in FM Approval's "Approval Guide," designed for fastening recover boards to deck.

## 2.4 AUXILIARY REROOFING MATERIALS

A. General: Auxiliary reroofing preparation materials recommended by roofing system manufacturer for intended use and compatible with components of [**existing and** ]new membrane roofing system.

B. Base Sheet Fasteners: Capped head, factory-coated steel fasteners, listed in FM Approval's "Approval Guide."

C. Metal Flashing Sheet: Metal flashing sheet is specified in Division 07 Section "Sheet Metal Flashing and Trim."

# PART 3 - EXECUTION

## 3.1 PREPARATION

A. Protect existing membrane roofing system that is indicated not to be reroofed.

1. Loosely lay 1-inch- (25-mm-) minimum thick, molded expanded polystyrene (MEPS) insulation over the roofing membrane in areas indicated. Loosely lay 15/32-inch (12-

mm) plywood or OSB panels over MEPS. Extend MEPS past edges of plywood or OSB panels a minimum of 1 inch (25 mm).

2. Limit traffic and material storage to areas of existing roofing membrane that have been protected.
3. Maintain temporary protection and leave in place until replacement roofing has been completed. Remove temporary protection on completion of reroofing.

B. Coordinate with Owner to shut down air-intake equipment in the vicinity of the Work. Cover air-intake louvers before proceeding with reroofing work that could affect indoor air quality or activate smoke detectors in the ductwork.

C. During removal operations, have sufficient and suitable materials on-site to facilitate rapid installation of temporary protection in the event of unexpected rain.

D. Maintain roof drains in functioning condition to ensure roof drainage at end of each workday. Prevent debris from entering or blocking roof drains and conductors. Use roof-drain plugs specifically designed for this purpose. Remove roof-drain plugs at end of each workday, when no work is taking place, or when rain is forecast.

1. If roof drains are temporarily blocked or unserviceable due to roofing system removal or partial installation of new membrane roofing system, provide alternative drainage method to remove water and eliminate ponding. Do not permit water to enter into or under existing membrane roofing system components that are to remain.

E. Verify that rooftop utilities and service piping have been shut off before beginning the Work.

## 3.2 ROOF TEAR-OFF

A. General: Notify Owner each day of extent of roof tear-off proposed for that dayRetain first paragraph below for existing aggregate-ballasted elastomeric or thermoplastic membrane roofing systems or for aggregate-surfaced foamed roofing. Retain option or revise to suit Project.

B. Remove aggregate ballast from roofing membrane.

C. Remove loose aggregate from aggregate-surfaced built-up bituminous roofing using a power broom.

D. Remove pavers and accessories from roofing membrane. Store and protect pavers and accessories for reuse. Discard cracked pavers.

E. Remove protection mat and extruded-polystyrene insulation from protected roofing membrane.

1. Discard extruded-polystyrene insulation that is wet and exceeds **8 lb/cu. ft. (128 kg/cu. m)**
2. Store extruded-polystyrene insulation for reuse and protect from physical damage.

F. Roof Tear-Off: Remove existing roofing membrane and other membrane roofing system components down to the deck.

1. Remove roof insulation
2. Bitumen and felts that are firmly bonded to concrete decks are permitted to remain if felts are dry. Remove unadhered bitumen and felts and wet felts.
3. Remove fasteners from deck to the extent possible or cut fasteners off slightly above deck surface.

G. Partial Roof Tear-Off: Where indicated, remove existing roofing membrane and other membrane roofing system components down to the deck.

1. Remove roof insulation.
2. Bitumen and felts that are firmly bonded to concrete decks are permitted to remain if felts are dry. Remove unadhered bitumen and felts and wet felts.
3. Remove fasteners from deck to the extent possible or cut fasteners off slightly above deck surface.

H. Partial Roof Tear-Off: Remove existing roofing membrane and immediately check for presence of moisture by visually observing substrate boardsthat will remain.

1. Coordinate with Owner's inspector to schedule times for tests and inspections immediately after membrane removal.
2. With an electrical capacitance moisture-detection meter, spot check substrate boardsthat will remain.
3. Remove wet or damp boards and roof insulation. Removal will be paid for by adjusting the Contract Sum according to unit prices included in the Contract Documents.
4. Bitumen and felts that are firmly bonded to concrete decks are permitted to remain if felts are dry. Remove unadhered bitumen and felts and wet felts.
5. Remove fasteners from deck to the extent possible or cut fasteners off slightly above deck surface.

## 3.3 DECK PREPARATION

A. Inspect deck aftertear-off of membrane or other existing roofing system.

B. If broken or loose fasteners that secure deck panels to one another or to structure are observed or if deck appears or feels inadequately attached, immediately notify Architect. Do not proceed with installation until directed by Architect.

C. If deck surface is not suitable for receiving new roofing or if structural integrity of deck is suspect, immediately notify Architect. Do not proceed with installation until directed by Architect.

D. Replace deck after inspection where the deck is not in condition to receive new roofing.

## 3.4 INFILL MATERIALS INSTALLATION

A. Immediately after removal of selected portions of existing membrane roofing system, and inspection and repair, if needed, of deck, fill in the tear-off areas to match existing membrane roofing system construction.

1. Install new roofing membrane patch over roof infill area. If new roofing membrane is installed the same day tear-off is made, roofing membrane patch is not required.

3.5 ROOF RE-COVER PREPARATION

A. Remove blisters, ridges, buckles**,** mechanically attached roofing membrane fastener buttons projecting above the membrane, and other substrate irregularities from existing roofing membrane that inhibit new recover boards from conforming to substrate.

1. Remove loose aggregate from aggregate-surfaced built-up bituminous roofing with a power broom.
2. Scarify the surface of sprayed polyurethane foam as necessary to achieve a sufficiently uniform plane to receive new recover boards.
3. Broom clean existing substrate.
4. Coordinate with Owner's inspector to schedule times for tests and inspections before proceeding with installation of recover boards.
5. Verify that existing substrate is dry before proceeding with installation of recover boards. Spot check substrates with an electrical capacitance moisture-detection meter.
6. Remove materials that are wet or damp. Removal will be paid for by adjusting the Contract Sum according to unit prices included in the Contract Documents.

B. Remove blisters, ridges, buckles,mechanically attached roofing membrane fastener buttons projecting above the membrane, and other substrate irregularities from existing roofing membrane that inhibit new recover boardsroofing membrane from conforming to substrate.

1. Remove loose aggregate from aggregate-surfaced built-up bituminous roofing with a power broom.
2. Scarify the surface of sprayed polyurethane foam as necessary to achieve a sufficiently uniform plane to receive new recover boards
3. Broom clean existing substrate.
4. Coordinate with Owner's inspector to schedule times for tests and inspections.
5. Verify that existing substrate is dry before proceeding with installation. Spot check substrates with an electrical capacitance moisture-detection meter.
6. Remove materials that are wet and damp. Removal will be paid for by adjusting the Contract Sum according to unit prices included in the Contract Documents.

C. Remove blisters and areas of membrane not fully adhered.

D. Remove mechanically attached roofing membrane fastener buttons projecting above the membrane and other substrate irregularities that inhibit new recover boards from conforming to substrate.

1. Remove loose aggregate from aggregate-surfaced built-up bituminous roofing with a power broom.
2. Clean substrate of contaminants such as dirt, debris, oil, and grease that can affect adhesion of coated foamed roofing.
3. Power vacuum the existing roof surface. If recommended by foam manufacturer, prime dried surface at recommended rate with recommended primer.

4. Scarify the surface of coated polyurethane roofing as necessary to achieve a suitable substrate for new roofing.

5. Verify that surface is dry by pressing litmus paper to surface areas most likely to retain moisture, such as shaded areas and low spots. If paper changes color, surface is too wet to apply foam.
6. Build up isolated low spots on existing roofing membrane with sprayed foam specified in Division 07 Section "Coated Foamed Roofing" to prevent ponding.

## 3.6 EXISTING BASE FLASHINGS

A. Remove existing base flashings around parapets, curbs, walls, and penetrations.

1. Clean substrates of contaminants such as asphalt, sheet materials, dirt, and debris.

B. Do not damage metal counterflashings that are to remain. Replace metal counterflashings damaged during removal with counterflashings of same metal, weight or thickness, and finish.

C. Inspect parapet sheathing for deterioration and damage. If parapet sheathing has deteriorated, immediately notify Architect.

D. Remove existing parapet sheathing and replace with new pressure-preservativetreated plywood sheathing, **19/32 inch (15 mm)** thick. If parapet framing has deteriorated, immediately notify Architect.

1. Plywood parapet sheathing is specified in Division 06 Section "Rough Carpentry Miscellaneous Rough Carpentry."

## 3.7 RECOVER BOARD INSTALLATION

A. Install recover boards over **roof insulation with** long joints in continuous straight lines and end joints staggered between rows. Loosely butt recover boards together and fasten to deck.

1. Tape joints of recover boards if required by roofing membrane manufacturer.
2. Fasten recover boards to resist wind-uplift pressure at corners, perimeter, and field of roof.
3. Install additional fasteners near board corners and edges as necessary to conform boards to substrate and to adjacent boards.

## 3.8 DISPOSAL

A. Collect demolished materials and place in containers. Promptly dispose of demolished materials. Do not allow demolished materials to accumulate on-site.

1. Storage or sale of demolished items or materials on-site is not permitted.

B. Transport and legally dispose of demolished materials off Owner's property.

END OF SECTION 070150.19

# SECTION 073113 - ASPHALT SHINGLES

## PART 1 - GENERAL

### 1.1 RELATED DOCUMENTS

A. Drawings and general provisions of the Contract, including General and Supplementary Conditions and Division 01 Specification Sections, apply to this Section.

### 1.2 SUMMARY

A. Section Includes:

1. Asphalt shingles.
2. Underlayment.

B. Related Sections:
1. .

### 1.3 DEFINITION

A. Roofing Terminology: See ASTM D 1079 and glossary of NRCA's "The NRCA Roofing and Waterproofing Manual" for definitions of terms related to roofing work in this Section.

### 1.4 SUBMITTALS

A. Product Data: For each type of product indicated.

B. Samples for Initial Selection: For each type of asphalt shingle, ridge and hip cap shingles indicated.

1. Include similar Samples of trim and accessories involving color selection.

C. Samples for Verification: For the following products, of sizes indicated, to verify color selected:

1. Asphalt Shingle: Full size.
2. Ridge and Hip Cap Shingles: Full size.
3. Self-Adhering Underlayment: 12 inches (300 mm) square.

D. Qualification Data: For qualified Installer.

E. Product Test Reports: Based on evaluation of comprehensive tests performed by manufacturer and witnessed by a qualified testing agency, for asphalt shingles.

F. Maintenance Data: For each type of asphalt shingle to include in maintenance manuals.

G. Warranties: Sample of special warranties.

## 1.5 QUALITY ASSURANCE

A. Installer Qualifications: Manufacturer's authorized representative who is trained and approved for installation of units required for this Project.

B. Source Limitations: Obtain ridge and hip cap and self-adhering sheet underlayment from single source from single manufacturer.

1. Exterior Fire-Test Exposure: Class C; ASTM E 108 or UL 790, for application and roof slopes indicated.

C. Mockups: Build mockups for asphalt shingles including related roofing materials.

D. Size: **96 inches (2400 mm) long by 96 inches (2400 mm) wide**
1. Approved mockups may become part of the completed Work if undisturbed at time of Substantial Completion.

E. Preinstallation Conference: Conduct conference at Project site.

## 1.6 DELIVERY, STORAGE, AND HANDLING

A. Store roofing materials in a dry, well-ventilated, weathertight location according to asphalt shingle manufacturer's written instructions. Store underlayment rolls on end on pallets or other raised surfaces. Do not double stack rolls.

1. Handle, store, and place roofing materials in a manner to avoid significant or permanent damage to roof deck or structural supporting members.

B. Protect unused underlayment from weather, sunlight, and moisture when left overnight or when roofing work is not in progress.

## 1.7 PROJECT CONDITIONS

A. Environmental Limitations: Do not deliver or install asphalt shingles until spaces are enclosed and weathertight, wet work in spaces is complete and dry, and temporary HVAC system is operating and maintaining ambient temperature and humidity conditions at occupancy levels during the remainder of the construction period.

1. Install self-adhering sheet underlayment within the range of ambient and substrate temperatures recommended by manufacturer.

1.8 WARRANTY

A. Special Warranty: Standard form in which manufacturer agrees to repair or replace asphalt shingles that fail in materials within specified warranty period.

1. Failures include, but are not limited to, the following:

a. Manufacturing defects.
b. Structural failures including failure of asphalt shingles to self-seal after a reasonable time.

2. Material Warranty Period: **25** years from date of Substantial Completion, prorated, with first three years nonprorated.
3. Wind-Speed Warranty Period: Asphalt shingles will resist blow-off or damage caused by wind speeds up to **80 mph (36 m/s)** for five years from date of Substantial Completion.
4. Algae-Discoloration Warranty Period: Asphalt shingles will not discolor **20** years from date of Substantial Completion.
5. Workmanship Warranty Period: 20 years from date of Substantial Completion.

1.9 EXTRA MATERIALS

A. Furnish extra materials that match products installed and that are packaged with protective covering for storage and identified with labels describing contents.

1. Asphalt Shingles: **100 sq. ft (9.3 sq. m)** of each type, in unbroken bundles.

PART 2 - PRODUCTS

2.1 The design intent is to match existing shingles in appearance, material and pattern.

2.2 GLASS-FIBER-REINFORCED ASPHALT SHINGLES

A. Laminated-Strip Asphalt Shingles: ASTM D 3462, laminated, multi-ply overlay construction, glass-fiber reinforced, mineral-granule surfaced, and self-sealing.

1. Manufacturers: Subject to compliance with requirements, provide products by one of the following available manufacturers offering products that may be incorporated into the Work :

a. Atlas Roofing Corporation.
b. CertainTeed Corporation.
c. Elk Premium Building Products, Inc.; an ElkCorp company.
d. Emco Building Products Corp.
e. GAF Materials Corporation.
f. IKO.
g. Malarkey Roofing Products.

h. Owens Corning.
i. PABCO Roofing Products.
j. TAMKO Roofing Products, Inc.

2. Butt Edge: Straight cut.
3. Strip Size: Manufacturer's standard.
4. Algae Resistance: Granules treated to resist algae discoloration.
5. Color and Blends: As selected by Owner from manufacturer's full range.

B. Laminated-Strip, SBS-Modified Asphalt Shingles: ASTM D 3462, laminated, multi-ply overlay construction, glass-fiber reinforced, mineral-granule surfaced, and self-sealing; complying with UL 2218, Class IV.

1. Manufacturers: Subject to compliance with requirements, provide products by one of the following available manufacturers offering products that may be incorporated into the Work include:

a. Atlas Roofing Corporation.
b. Malarkey Roofing Products.

2. Butt Edge: Straight.
3. Strip Size: Manufacturer's standard.
4. Algae Resistance: Granules treated to resist algae discoloration.
5. Color and Blends: As selected by Owner from manufacturer's full range.

C. Multitab-Strip Asphalt Shingles: ASTM D 3462, glass-fiber reinforced, mineral-granule surfaced, and self-sealing.

1. Manufacturers: Subject to compliance with requirements, provide products by one of the following available manufacturers offering products that may be incorporated into the Work:

a. Atlas Roofing Corporation.
b. CertainTeed Corporation.
c. GAF Materials Corporation.
d. IKO.
e. Malarkey Roofing Products.
f. Owens Corning.
g. PABCO Roofing Products.
h. TAMKO Roofing Products, Inc.

2. Tab Arrangement: Match existing shingles' tab arrangement if applicable.
3. Cutout Shape: Square.
4. Butt Edge: **S**traight
5. Strip Size: Manufacturer's standard.
6. Algae Resistance: Granules treated to resist algae discoloration.
7. Color and Blends:As selected by Owner from manufacturer's full range.

D. Three-Tab-Strip, SBS-Modified Asphalt Shingles: ASTM D 3462, glass-fiber reinforced, mineral-granule surfaced, and self-sealing; complying with UL 2218, Class IV.

1. Manufacturers: Subject to compliance with requirements, provide products by one of the following available manufacturers offering products that may be incorporated into the Work :

   a. Atlas Roofing Corporation.
   b. Malarkey Roofing Products.

2. Strip Size: Manufacturer's standard.
3. Algae Resistance: Granules treated to resist algae discoloration.
4. Color and Blends: As selected by Architect from manufacturer's full range.

E. No-Cutout-Strip Asphalt Shingles: ASTM D 3462, glass-fiber reinforced, mineral-granule surfaced, self-sealing, square, and single tab.

1. Manufacturers: Subject to compliance with requirements, available manufacturers offering products that may be incorporated into the Work include:

   a. Atlas Roofing Corporation.
   b. CertainTeed Corporation.
   c. IKO.

2. Butt Edge: Straight cut.
3. Strip Size: Manufacturer's standard.
4. Algae Resistance: Granules treated to resist algae discoloration.
5. Color and Blends: As selected by Architect from manufacturer's full range.

F. Hip and Ridge Shingles: Trim each side of lapped portion of unit to taper approximately 1 inch (25 mm).

## 2.3 UNDERLAYMENT MATERIALS

A. Self-Adhering Sheet Underlayment, Polyethylene Faced: ASTM D 1970, minimum of 80-mil- (2.0-mm-) thick, slip-resisting, polyethylene-film-reinforced top surface laminated to SBS-modified asphalt adhesive, with release paper backing; cold applied. Provide primer for adjoining concrete or masonry surfaces to receive underlayment.

1. Manufacturers: Subject to compliance with requirements, products by one of the following available manufacturers offering products may be incorporated into the Work:

   a. Carlisle Coatings & Waterproofing, Inc.
   b. Grace, W. R. & Co. - Conn.
   c. Henry Company.
   d. Johns Manville.
   e. Owens Corning.
   f. Polyguard Products, Inc.
   g. Protecto Wrap Company.

B. Self-Adhering Sheet Underlayment, High Temperature: Minimum of 30- to 40-mil- (0.76- to 1.0-mm-) thick, slip-resisting, polyethylene-film-reinforced top surface laminated to layer of

butyl or SBS-modified asphalt adhesive, with release paper backing; cold applied. Provide primer for adjoining concrete or masonry surfaces to receive underlayment.

1. Thermal Stability: Stable after testing at 240 deg F (116 deg C); ASTM D 1970.
2. Low-Temperature Flexibility: Passes after testing at minus 20 deg F (29 deg C); ASTM D 1970.
3. Manufacturers: Subject to compliance with requirements, available manufacturers offering products that may be incorporated into the Work:

   a. Carlisle Coatings & Waterproofing, Inc.
   b. Grace, W. R. & Co. - Conn.
   c. Henry Company.

## 2.4 ACCESSORIES

A. Asphalt Roofing Cement: ASTM D 4586, Type II, asbestos free.

B. Roofing Nails: ASTM F 1667; aluminum, stainless-steel, copper, or hot-dip galvanized-steel wire shingle nails, minimum 0.120-inch- (3-mm-) diameter, smooth shank, sharp-pointed, with a minimum 3/8-inch- (9.5-mm-) diameter flat head and of sufficient length to penetrate 3/4 inch (19 mm) into solid wood decking or extend at least 1/8 inch (3 mm) through OSB or plywood sheathing.

   1. Where nails are in contact with metal flashing, use nails made from same metal as flashing.

## 2.5 METAL FLASHING AND TRIM

   1. Sheet Metal: [Copper Stainless steel Zinc-tin alloy-coated stainless steel Anodized aluminum.

B. Fabricate sheet metal flashing and trim to comply with recommendations in SMACNA's "Architectural Sheet Metal Manual" that apply to design, dimensions, metal, and other characteristics of the item.

   1. Apron Flashings: See Architectural Drawings.
   2. Step Flashings: Fabricate with a headlap of 2 inches (50 mm) and a minimum extension of **4 inches (100 mm)** over the underlying asphalt shingle and up the vertical surface.
   3.
   4. Drip Edges: Fabricate in lengths not exceeding **10 feet (3 m)** with 2-inch (50-mm) roof-deck flange and 1-1/2-inch (38-mm) fascia flange with 3/8-inch (9.6-mm) drip at lower edge.

C. Vent Pipe Flashings: ASTM B 749, Type L51121, at least 1/16 inch (1.6 mm) thick. Provide lead sleeve sized to slip over and turn down into pipe, soldered to skirt at slope of roof, and extending at least 4 inches (100 mm) from pipe onto roof.

PART 3 - EXECUTION

3.1 EXAMINATION

A. Examine substrates, areas, and conditions, with Installer present, for compliance with requirements for installation tolerances and other conditions affecting performance of the Work.

1. Examine roof sheathing to verify that sheathing joints are supported by framing and blocking or metal clips and that installation is within flatness tolerances.
2. Verify that substrate is sound, dry, smooth, clean, sloped for drainage, and completely anchored; and that provision has been made for flashings and penetrations through asphalt shingles.

B. Prepare written report, endorsed by Installer, listing conditions detrimental to performance of the Work.

C. Proceed with installation only after unsatisfactory conditions have been corrected.

3.2 UNDERLAYMENT INSTALLATION

A. General: Comply with underlayment manufacturer's written installation instructions applicable to products and applications indicated unless more stringent requirements apply.

1. Install felt underlayment on roof deck not covered by self-adhering sheet underlayment. Lap sides of felt over self-adhering sheet underlayment not less than 3 inches (75 mm) in direction to shed water. Lap ends of felt not less than 6 inches (150 mm) over self-adhering sheet underlayment.
2. Install fasteners at no more than 36 inch (900 mm) o.c.
3.

B. Self-Adhering Sheet Underlayment: Install, wrinkle free, on roof deck. Comply with low-temperature installation restrictions of underlayment manufacturer if applicable. Install at locations indicated on Drawings, lapped in direction to shed water. Lap sides not less than 3-1/2 inches (89 mm). Lap ends not less than 6 inches (150 mm) staggered 24 inches (600 mm) between courses. Roll laps with roller. Cover underlayment within seven days.

1. Prime concrete and masonry surfaces to receive self-adhering sheet underlayment.
2. Eaves: Extend from edges of eaves **24 inches (600 mm)** beyond interior face of exterior wall.
3. Rakes: Extend from edges of rake **24 inches (600 mm)**Valleys: Extend from lowest to hig**hest point 18 inches (450 mm)** on each side.
4. **Hips:** See Architectural Drawings.
5. Ridges: Extend **36 inches (914 mm)** on each side **without obstructing continuous ridge vent slot**.
6. Sidewalls: Extend beyond sidewall **18 inches (450 mm)**, and return vertically against sidewall not less than [**6 inches (150 mm)**.

7. Dormers, Chimneys, Skylights, and Other Roof-Penetrating Elements: Extend beyond penetrating element **18 inches (450 mm)** , and return vertically against penetrating element not less than **4 inches (100 mm)**.

C. Concealed, Closed-Cut Valley Lining: Comply with NRCA's recommendations. Install a 36-inch- (914-mm-) wide felt underlayment centered in valley. Fasten to roof deck with roofing nails.

1. Lap roof-deck felt underlayment over valley felt underlayment at least 6 inches (150 mm).
2. Install a 36-inch- (914-mm-) wide strip of granular-surfaced valley lining centered in valley, with granular-surface face up. Lap ends of strips at least 12 inches (300 mm) in direction to shed water, and seal with asphalt roofing cement. Fasten to roof deck with roofing nails.

D. Metal-Flashed, Open-Valley Underlayment: Install two layers of 36-inch- (914-mm-) wide felt underlayment centered in valley. Stagger end laps between layers at least 72 inches (1830 mm). Lap ends of each layer at least 12 inches (300 mm) in direction to shed water, and seal with asphalt roofing cement. Fasten each layer to roof deck with felt underlayment nails.

1. Lap roof-deck felt underlayment over first layer of valley felt underlayment at least 6 inches (150 mm).

## 3.3 METAL FLASHING INSTALLATION

A. General: Install metal flashings according to recommendations in ARMA's "Residential Asphalt Roofing Manual" and asphalt shingle recommendations in NRCA's "The NRCA Roofing and Waterproofing Manual."

## 3.4 ASPHALT SHINGLE INSTALLATION

A. General: Install asphalt shingles according to manufacturer's written instructions, recommendations in ARMA's "Residential Asphalt Roofing Manual," and asphalt shingle recommendations in NRCA's "The NRCA Roofing and Waterproofing Manual."

B. Install starter strip along lowest roof edge, consisting of an asphalt shingle strip at least 7 inches (175 mm) wide with self-sealing strip face up at roof edge.

1. Extend asphalt shingles **3/4 inch** over fasciae at eaves and rakes.
2. Install starter strip along rake edge.

C. Install first and remaining courses of asphalt shingles stair-stepping diagonally across roof deck with] **manufacturer's recommended** offset pattern at succeeding courses, maintaining uniform exposure.

D. Install first and remaining courses of asphalt shingles stair-stepping diagonally across roof deck with manufacturer's recommended offset pattern at succeeding courses, maintaining uniform exposure.

E. Install asphalt shingles by single-strip column or racking method, maintaining uniform exposure. Install full-length first course followed by cut second course, repeating alternating pattern in succeeding courses.

F. Fasten asphalt shingle strips with a minimum of **four** roofing nails located according to manufacturer's written instructions.

1. Where roof slope exceeds 20:12, seal asphalt shingles with asphalt roofing cement spots after fastening with additional roofing nails.
2. Where roof slope is less than 4:12, seal asphalt shingles with asphalt roofing cement spots.
3. When ambient temperature during installation is below **50 deg F (10 deg C)**, seal asphalt shingles with asphalt roofing cement spots.

G. Woven Valleys: Extend succeeding asphalt shingle courses from both sides of valley **12 inches (300 mm)** beyond center of valley, weaving intersecting shingle-strip courses over each other. Use one-piece shingle strips without joints in valley.

1. Do not nail asphalt shingles within 6 inches (150 mm) of valley center.

H. Closed-Cut Valleys: Extend asphalt shingle strips from one side of valley **12 inches (300 mm)** beyond center of valley. Use one-piece shingle strips without joints in valley. Fasten with extra nail in upper end of shingle. Install asphalt shingle courses from other side of valley and cut back to a straight line 2 inches (50 mm) short of valley centerline. Trim upper concealed corners of cut-back shingle strips.

1. Do not nail asphalt shingles within 6 inches (150 mm) of valley center.
2. Set trimmed, concealed-corner asphalt shingles in a 3-inch- (75-mm-) wide bed of asphalt roofing cement.

I. Ridge Vents: Install continuous ridge vents over asphalt shingles according to manufacturer's written instructions. Fasten with roofing nails of sufficient length to penetrate sheathing.

J. Ridge and Hip Cap Shingles: Maintain same exposure of cap shingles as roofing shingle exposure. Lap cap shingles at ridges to shed water away from direction of prevailing winds. Fasten with roofing nails of sufficient length to penetrate sheathing.

1. Fasten ridge cap asphalt shingles to cover ridge vent without obstructing airflow.

## 3.5 ROOFING INSTALLER'S WARRANTY (PROVIDED AS A SAMPLE TO BE COMPLETED BY CONTRACTOR AND APPROVED BY OWNER)

A. WHEREAS <**Insert name**> of <**Insert address**>, herein called the "Roofing Installer," has performed roofing and associated work ("work") on the following project:

1. Owner: <**Insert name of Owner**>.
2. Address: <**Insert address**>.
3. Building Name/Type: <**Insert information**>.
4. Address: <**Insert address**>.

5. Area of Work: <**Insert information**>.
6. Acceptance Date: <**Insert date**>.
7. Warranty Period: <**Insert time**>.
8. Expiration Date: <**Insert date**>.

B. AND WHEREAS Roofing Installer has contracted (either directly with Owner or indirectly as a subcontractor) to warrant said work against leaks and faulty or defective materials and workmanship for designated Warranty Period,

C. NOW THEREFORE Roofing Installer hereby warrants, subject to terms and conditions herein set forth, that during Warranty Period he will, at his own cost and expense, make or cause to be made such repairs to or replacements of said work as are necessary to correct faulty and defective work and as are necessary to maintain said work in a watertight condition.

D. This Warranty is made subject to the following terms and conditions:

1. Specifically excluded from this Warranty are damages to work and other parts of the building, and to building contents, caused by:

   a. Lightning;
   b. Peak gust wind speed exceeding 105 mph (46 m/sec);
   c. Fire;
   d. Failure of roofing system substrate, including cracking, settlement, excessive deflection, deterioration, and decomposition;
   e. Faulty construction of parapet walls, copings, chimneys, skylights, vents, equipment supports, and other edge conditions and penetrations of the work;
   f. Vapor condensation on bottom of roofing; and
   g. Activity on roofing by others, including construction contractors, maintenance personnel, other persons, and animals, whether authorized or unauthorized by Owner.

2. When work has been damaged by any of foregoing causes, Warranty shall be null and void until such damage has been repaired by Roofing Installer and until cost and expense thereof have been paid by Owner or by another responsible party so designated.
3. Roofing Installer is responsible for damage to work covered by this Warranty but is not liable for consequential damages to building or building contents resulting from leaks or faults or defects of work.
4. During Warranty Period, if Owner allows alteration of work by anyone other than Roofing Installer, including cutting, patching, and maintenance in connection with penetrations, attachment of other work, and positioning of anything on roof, this Warranty shall become null and void on date of said alterations, but only to the extent said alterations affect work covered by this Warranty. If Owner engages Roofing Installer to perform said alterations, Warranty shall not become null and void unless Roofing Installer, before starting said work, shall have notified Owner in writing, showing reasonable cause for claim, that said alterations would likely damage or deteriorate work, thereby reasonably justifying a limitation or termination of this Warranty.
5. During Warranty Period, if original use of roof is changed and it becomes used for, but was not originally specified for, a promenade, work deck, spray-cooled surface, flooded basin, or other use or service more severe than originally specified, this Warranty shall

become null and void on date of said change, but only to the extent said change affects work covered by this Warranty.

6. Owner shall promptly notify Roofing Installer of observed, known, or suspected leaks, defects, or deterioration and shall afford reasonable opportunity for Roofing Installer to inspect work and to examine evidence of such leaks, defects, or deterioration.
7. This Warranty is recognized to be the only warranty of Roofing Installer on said work and shall not operate to restrict or cut off Owner from other remedies and resources lawfully available to Owner in cases of roofing failure. Specifically, this Warranty shall not operate to relieve Roofing Installer of responsibility for performance of original work according to requirements of the Contract Documents, regardless of whether Contract was a contract directly with Owner or a subcontract with Owner's General Contractor.

E. IN WITNESS THEREOF, this instrument has been duly executed this <**Insert day**> day of <**Insert month**>, <**Insert year**>.

1. Authorized Signature: <**Insert signature**>.
2. Name: <**Insert name**>.
3. Title: <**Insert title**>.

END OF SECTION 073113

# SECTION 075323 - ETHYLENE-PROPYLENE-DIENE-MONOMER (EPDM) ROOFING

## PART 1 - GENERAL

### 1.1 RELATED DOCUMENTS

A. Drawings and general provisions of the Contract, including General and Supplementary Conditions and Division 01 Specification Sections, apply to this Section.

### 1.2 SUMMARY

A. Section Includes:

1. Adhered EPDM membrane roofing system.
2. .
3. Vapor retarder.
4. Roof insulation.

B. Related Sections:

1. Division 05 Section "Steel Decking" for furnishing acoustical deck rib insulation.
2. Division 06 Section "Rough Carpentry" for wood nailers, curbs, and blocking
3. Division 07 Section "Preparation for Re-Roofing" for recover board beneath new membrane roofing.
4. Division 07 Section "Joint Sealants" for joint sealants, joint fillers, and joint preparation.

### 1.3 DEFINITIONS

A. Roofing Terminology: See ASTM D 1079 and glossary of NRCA's "The NRCA Roofing and Waterproofing Manual" for definitions of terms related to roofing work in this Section.

### 1.4 PERFORMANCE REQUIREMENTS

A. General Performance: Installed membrane roofing and base flashings shall withstand existing wind uplift pressures, thermally induced movement, and exposure to weather without failure due to defective manufacture, fabrication, installation, or other defects in construction. Membrane roofing and base flashings shall remain watertight.

B. Material Compatibility: Provide roofing materials that are compatible with one another under conditions of service and application required, as demonstrated by membrane roofing manufacturer based on testing and field experience.

C. Roofing System Design: Provide membrane roofing system that is identical to systems that have been successfully tested by a qualified testing and inspecting agency to resist uplift pressure calculated according to ASCE/SEI 7.

## 1.5 SUBMITTALS

A. Product Data: For each type of product indicated.

B. Shop Drawings: For roofing system. Include plans, elevations, sections, details, and attachments to other work.

1. Base flashings and membrane terminations.
2. Tapered insulation, including slopes.
3. Roof plan showing orientation of steel roof deck and orientation of membrane roofing and fastening spacings and patterns for mechanically fastened membrane roofing.
4. Insulation fastening patterns for corner, perimeter, and field-of-roof locations.

C. Samples for Verification: For the following products, in manufacturer's standard sizes:

1. Sheet roofing, of color specified, including T-shaped side and end lap seam.
2. Roof insulation.
3. 10 lb (4.5 kg) of aggregate ballast in gradation and colorindicated.
4. Roof paver**, full sized,** in each color and texture required.
5. Termination bars.
6. Six insulation fasteners of each type, length, and finish.
7. Six roof cover fasteners of each type, length, and finish.

D. Qualification Data: For qualified Installer and manufacturer.

E. Manufacturer Certificate: Signed by roofing manufacturer certifying that membrane roofing system complies with requirements specified in "Performance Requirements" Article.

F. Field quality-control reports.

G. Maintenance Data: For membrane roofing system to include in maintenance manuals.

H. Warranties: Sample of special warranties.

## 1.6 QUALITY ASSURANCE

A. Manufacturer Qualifications: A qualified manufacturer that is UL listed for membrane roofing system identical to that used for this Project.

B. Installer Qualifications: A qualified firm that is approved, authorized, or licensed by membrane roofing system manufacturer to install manufacturer's product and that is eligible to receive manufacturer's special warranty.

C. Exterior Fire-Test Exposure: ASTM E 108, Class C; for application and roof slopes indicated, as determined by testing identical membrane roofing materials by a qualified testing agency. Materials shall be identified with appropriate markings of applicable testing agency.

D. Preliminary Roofing Conference: Before starting roof deck construction, conduct conference at Project site <

1. Meet withOwner, Architect, Owner's insurer if applicable, testing and inspecting agency representative, roofing Installer, roofing system manufacturer's representative, deck Installer, and installers whose work interfaces with or affects roofing, including installers of roof accessories and roof-mounted equipment.
2. Review methods and procedures related to roofing installation, including manufacturer's written instructions.
3. Review and finalize construction schedule and verify availability of materials, Installer's personnel, equipment, and facilities needed to make progress and avoid delays.
4. Review requirements for deck substrate conditions and finishes, including flatness and fastening.
5. Review structural loading limitations of roof deck during and after roofing.
6. Review base flashings, special roofing details, roof drainage, roof penetrations, equipment curbs, and condition of other construction that will affect roofing system.
7. Review temporary protection requirements for roofing system during and after installation.
8. Review roof observation and repair procedures after roofing installation.

E. Preinstallation Roofing Conference: Conduct conference at Project site .

## 1.7 DELIVERY, STORAGE, AND HANDLING

A. Deliver roofing materials to Project site in original containers with seals unbroken and labeled with manufacturer's name, product brand name and type, date of manufacture, approval or listing agency markings, and directions for storing and mixing with other components.

B. Store liquid materials in their original undamaged containers in a clean, dry, protected location and within the temperature range required by roofing system manufacturer. Protect stored liquid material from direct sunlight.

1. Discard and legally dispose of liquid material that cannot be applied within its stated shelf life.

C. Protect roof insulation materials from physical damage and from deterioration by sunlight, moisture, soiling, and other sources. Store in a dry location. Comply with insulation manufacturer's written instructions for handling, storing, and protecting during installation.

D. Handle and store roofing materials and place equipment in a manner to avoid permanent deflection of deck.

## 1.8 PROJECT CONDITIONS

A. Weather Limitations: Proceed with installation only when existing and forecasted weather conditions permit roofing system to be installed according to manufacturer's written instructions and warranty requirements.

1.9 WARRANTY

A. Special Warranty: Manufacturer's standard or customized form, without monetary limitation, in which manufacturer agrees to repair or replace components of membrane roofing system that fail in materials or workmanship within specified warranty period.

1. Special warranty includes membrane roofing, base flashings, roof insulation**, fasteners, cover boards, roofing accessories, roof pavers,** and other components of membrane roofing system.
2. Warranty Period: **20** years from date of Substantial Completion.

3.

PART 2 - PRODUCTS

2.1 EPDM MEMBRANE ROOFING

A. EPDM: ASTM D 4637, Type II, scrim or fabric internally reinforced, uniform, flexible EPDM sheet.

1. Manufacturers: Subject to compliance with requirements, available manufacturers offering products that may be incorporated into the Work include, but are not limited to, the following:

a. Carlisle SynTec Incorporated.
b. ERSystems.
c. Firestone Building Products.
d. GAF Materials Corporation.
e. GenFlex Roofing Systems.
f. International Diamond Systems.
g. Johns Manville.
h. Mule-Hide Products Co., Inc.
i. Protective Coatings, Inc.
j. Roofing Products International, Inc.
k. StaFast Building Products.
l. Versico Incorporated.

2. Thickness: **75 mils (1.9 mm)**
3. Exposed Face Color: **White on black**

B. Fabric-Backed EPDM: ASTM D 4637, Type III, non-reinforced, uniform, flexible EPDM sheet, laminated to a nonwoven polyester fabric backing except at selvages.

1. Manufacturers: Subject to compliance with requirements, provide products by one of the following manufacturers offering products that may be incorporated into the Work**.**:

a. Carlisle SynTec Incorporated.
b. Versico Incorporated.

2. Composite Thickness: **100 mils (2.5 mm)** , nominal.
3. Exposed Face Color: White on black

## 2.2 AUXILIARY MEMBRANE ROOFING MATERIALS

A. General: Auxiliary membrane roofing materials recommended by roofing system manufacturer for intended use and compatible with membrane roofing.

1. Liquid-type auxiliary materials shall comply with VOC limits of authorities having jurisdiction.

B. Sheet Flashing: 60-mil- (1.5-mm-) thick EPDM, partially cured or cured, according to application.

C. Bonding Adhesive: Manufacturer's standard**,** water based.

D. Modified Asphaltic Fabric-Backed Membrane Adhesive: Roofing system manufacturer's standard modified asphalt, asbestos-free, cold-applied adhesive formulated for compatibility and use with fabric-backed membrane roofing.

E. Water-Based, Fabric-Backed Membrane Adhesive: Roofing system manufacturer's standard water-based, cold-applied adhesive formulated for compatibility and use with fabric-backed membrane roofing.

F. Low-Rise, Urethane, Fabric-Backed Membrane Adhesive: Roof system manufacturer's standard spray-applied, low-rise, two-component urethane adhesive formulated for compatibility and use with fabric-backed membrane roofing.

G. Seaming Material: **Manufacturer's standard, synthetic-rubber polymer primer and 3-inch- (75-mm-) wide minimum, butyl splice tape with release film**.

H. Lap Sealant: Manufacturer's standard, single-component sealant**, colored to match membrane roofing**.

I. Water Cutoff Mastic: Manufacturer's standard butyl mastic sealant.

J. Metal Termination Bars: Manufacturer's standard, predrilled stainless-steel or aluminum bars, approximately 1 by 1/8 inch (25 by 3 mm) thick; with anchors.

K. Metal Battens: Manufacturer's standard, aluminum-zinc-alloy-coated or zinc-coated steel sheet, approximately 1 inch wide by 0.05 inch thick (25 mm wide by 1.3 mm thick), prepunched.

L. Fasteners: Factory-coated steel fasteners and metal or plastic plates complying with corrosion-resistance provisions in FM Approvals 4470, designed for fastening membrane to substrate, and acceptable to roofing system manufacturer.

M. Miscellaneous Accessories: Provide pourable sealers, preformed cone and vent sheet flashings, preformed inside and outside corner sheet flashings, reinforced EPDM securement strips, T-joint covers, in-seam sealants, termination reglets, cover strips, and other accessories.

N. Liquid coating, specifically formulated for coating EPDM membrane roofing, as follows:

1. Type: Acrylic emulsion
2. Color: As selected by Owner's representative from manufacturer's full range

## 2.3 SUBSTRATE BOARDS

A. Substrate Board: ASTM C 1177/C 1177M, glass-mat, water-resistant gypsum substrate, **Type X, 5/8 inch (16 mm)** thick.

1. Products: Subject to compliance with requirements, available products that may be incorporated into the Work include, but are not limited to, the following

a. Georgia-Pacific Corporation; Dens Deck.

B. Substrate Board: ASTM C 1278/C 1278M, cellulosic-fiber-reinforced, water-resistant gypsum **5/8 inch (16 mm)** thick.

1. Products: Subject to compliance with requirements, **provide one of the following products that may be incorporated into the Work.**

a. USG Corporation; Securock.

C. Fasteners: Factory-coated steel fasteners and metal or plastic plates complying with corrosion-resistance provisions in FM Approvals 4470, designed for fastening substrate panel to roof deck.

## 2.4 VAPOR RETARDER

A. Polyethylene Film: ASTM D 4397, 6 mils (0.15 mm) thick, minimum, with maximum permeance rating of 0.13 perm (7.5 ng/Pa x s x sq. m).

1. Tape: Pressure-sensitive tape of type recommended by vapor-retarder manufacturer for sealing joints and penetrations in vapor retarder.
2. Adhesive: Manufacturer's standard lap adhesive, FM Approvals approved for vapor-retarder application.

B. Laminated Sheet: Kraft paper, two layers, laminated with asphalt and edge reinforced with woven fiberglass yarn with maximum permeance rating of 0.50 perm (29 ng/Pa x s x sq. m) and with manufacturer's standard adhesive.

## 2.5 ROOF INSULATION

A. General: Preformed roof insulation boards manufactured or approved by EPDM membrane roofing manufacturer, selected from manufacturer's standard sizes suitable for application, of thicknesses indicated

B. Extruded-Polystyrene Board Insulation: ASTM C 578, Type IV**, 1.6-lb/cu. ft. (26-kg/cu. m)** minimum density, square edged.

1. Facer: ASTM C 208, Type II, Grade 2, cellulosic-fiber insulation board, asphalt coated, 1/2 inch (13 mm) thick.
2. Facer: DOC PS 2, Exposure 1, OSB, 7/16 inch (11 mm) thick.

C. Polyisocyanurate Board Insulation: ASTM C 1289, Type II, Class 1, Grade 2, felt or glass-fiber mat facer on both major surfaces.

D. Composite Polyisocyanurate Board Insulation: ASTM C 1289, with factory-applied facing board on one major surface, as indicated below by type, and felt or glass-fiber mat facer on the other.

1. Type IV, cellulosic-fiber-insulation-board facer, Grade 2, 1/2 inch (13 mm) thick.
2. Type VII, glass mat faced gypsum board facer, 1/4 inch (6 mm) thick.

E. Tapered Insulation: Provide factory-tapered insulation boards fabricated to slope of**1/4 inch per 12 inches (1:48)** unless otherwise indicated.

F. Provide preformed saddles, crickets, tapered edge strips, and other insulation shapes where indicated for sloping to drain. Fabricate to slopes indicated.

## 2.6 INSULATION ACCESSORIES

A. General: Furnish roof insulation accessories recommended by insulation manufacturer for intended use and compatibility with membrane roofing.

B. Fasteners: Factory-coated steel fasteners and metal or plastic plates complying with corrosion-resistance provisions in FM Approvals 4470, designed for fastening roof insulationand cover boards to substrate, and acceptable to roofing system manufacturer.

C. Modified Asphaltic Insulation Adhesive: Insulation manufacturer's recommended modified asphalt, asbestos-free, cold-applied adhesive formulated to attach roof insulation to substrate or to another insulation layer.

D. Full-Spread Applied Insulation Adhesive: Insulation manufacturer's recommended spray-applied, low-rise, two-component urethane adhesive formulated to attach roof insulation to substrate or to another insulation layer.

E. Cover Board: ASTM C 1177/C 1177M, glass-mat, water-resistant gypsum substrate, **5/8 inch (16 mm)** thick**, factory primed**.

1. Products: Subject to compliance with requirements, **provide one of the following products that may be incorporated into the Work.**

a. Georgia-Pacific Corporation; Dens Deck, Dens Deck Prime, Dens Deck DuraGuard.

2.7 ASPHALT MATERIALS

A. Roofing Asphalt: **ASTM D 312, Type III or Type IV** or**ASTM D 6152, SEBS modified**.

2.8 WALKWAYS

A. Walkway Roof Pavers: Heavyweight, hydraulically pressed, concrete units, **square edged with top edges beveled 3/16 inch (5 mm)**, factory cast for use as roof pavers; absorption not greater than 5 percent, ASTM C 140; no breakage and maximum 1 percent mass loss when tested for freeze-thaw resistance, ASTM C 67; and as follows:

1. Manufacturers: Subject to compliance with requirements, **provide products by one of the following manufacturers offering products that may be incorporated into the Work.**

   a. Hanover Architectural Products.
   b. Rapid Building Systems.
   c. Roofblok Limited.
   d. Sunny Brook Pressed Concrete.
   e. Wausau Tile, Inc.; Terra-Paving Division.
   f. Westile Roofing Products.

2. .
3. Weight: **18 lb/sq. ft. (90 kg/sq. m) 22**
4. Compressive Strength: **6500 psi (45 MPa)** minimum.
5. Colors and Textures: **As selected by Owner from manufacturer's full range**.

PART 3 - EXECUTION

3.1 EXAMINATION

A. Examine substrates, areas, and conditions, with Installer present, for compliance with the following requirements and other conditions affecting performance of roofing system:

1. Verify that roof openings and penetrations are in place and curbs are set and braced and that roof drain bodies are securely clamped in place.
2. Verify that wood blocking, curbs, and nailers are securely anchored to roof deck at penetrations and terminations and that nailers match thicknesses of insulation.

3.2 PREPARATION

A. Clean substrate of dust, debris, moisture, and other substances detrimental to roofing installation according to roofing system manufacturer's written instructions. Remove sharp projections.

B. Prevent materials from entering and clogging roof drains and conductors and from spilling or migrating onto surfaces of other construction. Remove roof-drain plugs when no work is taking place or when rain is forecast.

C. Complete terminations and base flashings and provide temporary seals to prevent water from entering completed sections of roofing system at the end of the workday or when rain is forecast. Remove and discard temporary seals before beginning work on adjoining roofing.

## 3.3 SUBSTRATE BOARD

## 3.4 VAPOR-RETARDER INSTALLATION

A. Polyethylene Film: Loosely lay polyethylene-film vapor retarder in a single layer over area to receive vapor retarder, side and end lapping each sheet a minimum of 2 inches (50 mm) and 6 inches (150 mm), respectively.

1. Continuously seal side and end laps with **tape adhesive**.

B. Laminate Sheet: Install laminate-sheet vapor retarder in a single layer over area to receive vapor retarder, side and end lapping each sheet a minimum of 2 inches (50 mm) and 6 inches (150 mm), respectively. Bond vapor retarder to substrate as follows:

1. Apply adhesive at rate recommended by vapor-retarder manufacturer. Seal laps with adhesive.

C. Completely seal vapor retarder at terminations, obstructions, and penetrations to prevent air movement into membrane roofing system.

## 3.5 INSULATION INSTALLATION

A. Coordinate installing membrane roofing system components so insulation is not exposed to precipitation or left exposed at the end of the workday.

B. Comply with membrane roofing system and insulation manufacturer's written instructions for installing roof insulation.

C. Install tapered insulation under area of roofing to conform to slopes indicated.

D. Install insulation under area of roofing to achieve required thickness. Where overall insulation thickness is 2.7 inches (68 mm) or greater, install two or more layers with joints of each succeeding layer staggered from joints of previous layer a minimum of 6 inches (150 mm) in each direction.

1. Where installing composite and noncomposite insulation in two or more layers, install noncomposite board insulation for bottom layer and intermediate layers, if applicable, and install composite board insulation for top layer.

E. Trim surface of insulation where necessary at roof drains so completed surface is flush and does not restrict flow of water.

F. Install insulation with long joints of insulation in a continuous straight line with end joints staggered between rows, abutting edges and ends between boards. Fill gaps exceeding 1/4 inch (6 mm) with insulation.

1. Cut and fit insulation within 1/4 inch (6 mm) of nailers, projections, and penetrations.

G. Adhered Insulation: Install each layer of insulation and adhere to substrate as follows:

1. Prime surface of concrete deck with asphalt primer at rate of 3/4 gal./100 sq. ft. (0.3 L/sq. m) and allow primer to dry.
2. Set each layer of insulation in a solid mopping of hot roofing asphalt, applied within plus or minus 25 deg F (14 deg C) of equiviscous temperature.
3. Set each layer of insulation in ribbons of bead-applied insulation adhesive, firmly pressing and maintaining insulation in place.
4. Set each layer of insulation in a uniform coverage of full-spread insulation adhesive, firmly pressing and maintaining insulation in place.
5. Set each subsequent layer of insulation in a solid mopping of hot roofing asphalt, applied within plus or minus 25 deg F (14 deg C) of equiviscous temperature.
6. Set each subsequent layer of insulation in ribbons of bead-applied insulation adhesive, firmly pressing and maintaining insulation in place.
7. Set each subsequent layer of insulation in a uniform coverage of full-spread insulation adhesive, firmly pressing and maintaining insulation in place.

H. Install cover boards over insulation with long joints in continuous straight lines with end joints staggered between rows. Offset joints of insulation below a minimum of 6 inches (150 mm) in each direction. Loosely butt cover boards together and fasten to roof deck.
1. Fasten cover boards to resist uplift pressure at corners, perimeter, and field of roof.

## 3.6 ADHERED MEMBRANE ROOFING INSTALLATION

A. Adhere fabric-backed membrane roofing over area to receive roofing according to membrane roofing system manufacturer's written instructions. Unroll membrane roofing and allow to relax before installing.

B. Start installation of membrane roofing in presence of membrane roofing system manufacturer's technical personnel.

C. Accurately align membrane roofing and maintain uniform side and end laps of minimum dimensions required by manufacturer. Stagger end laps.

D. Bonding Adhesive: Apply to substrate and underside of membrane roofing at rate required by manufacturer and allow to partially dry before installing membrane roofing. Do not apply to splice area of membrane roofing.

E. Hot Roofing Asphalt: Apply a solid mopping of hot roofing asphalt to substrate at temperature and rate required by manufacturer and install fabric-backed membrane roofing. Do not apply to splice area of membrane roofing.

F. Fabric-Backed Membrane Adhesive: Apply to substrate at rate required by manufacturer and install fabric-backed membrane roofing.

G. Apply membrane roofing with side laps shingled with slope of roof deck where possible.

H. Adhesive Seam Installation: Clean both faces of splice areas, apply splicing cement, and firmly roll side and end laps of overlapping membrane roofing according to manufacturer's written instructions to ensure a watertight seam installation. Apply lap sealant and seal exposed edges of membrane roofing terminations.

1. Apply a continuous bead of in-seam sealant before closing splice if required by membrane roofing system manufacturer.

I. Tape Seam Installation: Clean and prime both faces of splice areas, apply splice tape, and firmly roll side and end laps of overlapping membrane roofing according to manufacturer's written instructions to ensure a watertight seam installation. Apply lap sealant and seal exposed edges of membrane roofing terminations.

J. Repair tears, voids, and lapped seams in roofing that does not comply with requirements.

K. Spread sealant or mastic bed over deck drain flange at roof drains and securely seal membrane roofing in place with clamping ring.

L. Adhere protection sheet over membrane roofing at locations required by roofing manufacturer.

## 3.7 BASE FLASHING INSTALLATION

A. Install sheet flashings and preformed flashing accessories and adhere to substrates according to membrane roofing system manufacturer's written instructions.

B. Apply bonding adhesive to substrate and underside of sheet flashing at required rate and allow to partially dry. Do not apply to seam area of flashing.

C. Flash penetrations and field-formed inside and outside corners with cured or uncured sheet flashing.

D. Clean splice areas, apply splicing cement, and firmly roll side and end laps of overlapping sheets to ensure a watertight seam installation. Apply lap sealant and seal exposed edges of sheet flashing terminations.

E. Terminate and seal top of sheet flashings **and mechanically anchor to substrate through termination bars**.

3.8 COATING INSTALLATION

A. Apply coatings to **membrane roofing base flashings** according to manufacturer's written recommendations, by spray, roller, or other suitable application method.

3.9 WALKWAY INSTALLATION

A. Roof-Paver Walkways: Install walkway roof pavers according to manufacturer's written instructions in locations indicated, to form walkways. Leave 3 inches (75 mm) of space between adjacent roof pavers.

3.10 FIELD QUALITY CONTROL

A. Testing Agency: Engage a qualified independent testing agency to perform inspections.

B. Final Roof Inspection: Arrange for roofing system manufacturer's technical personnel to inspect roofing installation on completion.

C. Repair or remove and replace components of membrane roofing system where inspections indicate that they do not comply with specified requirements.

D. Additional inspections, at Contractor's expense, will be performed to determine compliance of replaced or additional work with specified requirements.

3.11 PROTECTING AND CLEANING

A. Protect membrane roofing system from damage and wear during remainder of construction period. When remaining construction will not affect or endanger roofing, inspect roofing for deterioration and damage, describing its nature and extent in a written report, with copies to Architect and Owner.

B. Correct deficiencies in or remove membrane roofing system that does not comply with requirements, repair substrates and repair or reinstall membrane roofing system to a condition free of damage and deterioration at time of Substantial Completion and according to warranty requirements.

C. Clean overspray and spillage from adjacent construction using cleaning agents and procedures recommended by manufacturer of affected construction.

3.12 ROOFING INSTALLER'S WARRANTY(PROVIDED AS A SAMPLE TO BE COMPLETED BY CONTRACTOR AND APPROVED BY OWNER)

A. WHEREAS <**Insert name**> of <**Insert address**>, herein called the "Roofing Installer," has performed roofing and associated work ("work") on the following project:

1. Owner: <**Insert name of Owner.**>
2. Address: <**Insert address.**>

3. Building Name/Type: <**Insert information.**>
4. Address: <**Insert address.**>
5. Area of Work: <**Insert information.**>
6. Acceptance Date: <**Insert date.**>
7. Warranty Period: <**Insert time.**>
8. Expiration Date: <**Insert date.**>

B. AND WHEREAS Roofing Installer has contracted (either directly with Owner or indirectly as a subcontractor) to warrant said work against leaks and faulty or defective materials and workmanship for designated Warranty Period,

C. NOW THEREFORE Roofing Installer hereby warrants, subject to terms and conditions herein set forth, that during Warranty Period he will, at his own cost and expense, make or cause to be made such repairs to or replacements of said work as are necessary to correct faulty and defective work and as are necessary to maintain said work in a watertight condition.

D. This Warranty is made subject to the following terms and conditions:

1. Specifically excluded from this Warranty are damages to work and other parts of the building, and to building contents, caused by:

   a. Lightning;
   b. Peak gust wind speed exceeding 105 mph (46 m/sec);;
   c. Fire;
   d. Failure of roofing system substrate, including cracking, settlement, excessive deflection, deterioration, and decomposition;
   e. Faulty construction of parapet walls, copings, chimneys, skylights, vents, equipment supports, and other edge conditions and penetrations of the work;
   f. Vapor condensation on bottom of roofing; and
   g. Activity on roofing by others, including construction contractors, maintenance personnel, other persons, and animals, whether authorized or unauthorized by Owner.

2. When work has been damaged by any of foregoing causes, Warranty shall be null and void until such damage has been repaired by Roofing Installer and until cost and expense thereof have been paid by Owner or by another responsible party so designated.
3. Roofing Installer is responsible for damage to work covered by this Warranty but is not liable for consequential damages to building or building contents resulting from leaks or faults or defects of work.
4. During Warranty Period, if Owner allows alteration of work by anyone other than Roofing Installer, including cutting, patching, and maintenance in connection with penetrations, attachment of other work, and positioning of anything on roof, this Warranty shall become null and void on date of said alterations, but only to the extent said alterations affect work covered by this Warranty. If Owner engages Roofing Installer to perform said alterations, Warranty shall not become null and void unless Roofing Installer, before starting said work, shall have notified Owner in writing, showing reasonable cause for claim, that said alterations would likely damage or deteriorate work, thereby reasonably justifying a limitation or termination of this Warranty.

5. During Warranty Period, if original use of roof is changed and it becomes used for, but was not originally specified for, a promenade, work deck, spray-cooled surface, flooded basin, or other use or service more severe than originally specified, this Warranty shall become null and void on date of said change, but only to the extent said change affects work covered by this Warranty.
6. Owner shall promptly notify Roofing Installer of observed, known, or suspected leaks, defects, or deterioration and shall afford reasonable opportunity for Roofing Installer to inspect work and to examine evidence of such leaks, defects, or deterioration.
7. This Warranty is recognized to be the only warranty of Roofing Installer on said work and shall not operate to restrict or cut off Owner from other remedies and resources lawfully available to Owner in cases of roofing failure. Specifically, this Warranty shall not operate to relieve Roofing Installer of responsibility for performance of original work according to requirements of the Contract Documents, regardless of whether Contract was a contract directly with Owner or a subcontract with Owner's General Contractor.

E. IN WITNESS THEREOF, this instrument has been duly executed this <**Insert day**> day of <**Insert month**>, <**Insert year**>.

1. Authorized Signature: <**Insert signature**>.
2. Name: <**Insert name**>.
3. Title: <**Insert title**>.

END OF SECTION 075323

# SECTION 081113 - HOLLOW METAL DOORS AND FRAMES

## PART 1 - GENERAL

### 1.1 RELATED DOCUMENTS

A. Drawings and general provisions of the Contract, including General and Supplementary Conditions and Division 01 Specification Sections, apply to this Section.

### 1.2 SUMMARY

A. Section Includes:

1. Standard hollow metal **doors**, to match existing.

B. Related Sections:

1. For electrical connections including conduit and wiring for door controls and operators, coordinate with the Facility Manager.

### 1.3 DEFINITIONS

A. Minimum Thickness: Minimum thickness of base metal without coatings.

B. Standard Hollow Metal Work: Hollow metal work fabricated according to ANSI/SDI A250.8.

### 1.4 SUBMITTALS

A. Product Data: For each type of product indicated. Include construction details, material descriptions, core descriptions, and finishes.

B. Shop Drawings: Include the following:

1. Elevations of each door design.
2. Details of doors, including vertical and horizontal edge details and metal thicknesses.
3. Locations of reinforcement and preparations for hardware.
4. Details of accessories.
5. Details of moldings, removable stops, and glazing.
6. Details of conduit and preparations for power, signal, and control systems.

C. Samples for Initial Selection: For units with factory-applied color finishes.

D. Samples for Verification:

1. For each type of exposed finish required, prepared on Samples of not less than 3 by 5 inches (75 by 125 mm).

2. For the following items, prepared on Samples about **12 by 12 inches (305 by 305 mm)** to demonstrate compliance with requirements for quality of materials and construction:

   a. Doors: Show vertical-edge, top, and bottom construction; core construction; and hinge and other applied hardware reinforcement. Include separate section showing glazing if applicable.

E. Other Action Submittals:

1. Schedule: Provide a schedule of hollow metal work prepared by or under the supervision of supplier, using same reference numbers for details and openings as those on Drawings. Coordinate with door hardware schedule.

F.

## 1.5 QUALITY ASSURANCE

A. Source Limitations: Obtain hollow metal work from single source from single manufacturer.
1. .

B. Preinstallation Conference: Conduct conference at Project site.

## 1.6 DELIVERY, STORAGE, AND HANDLING

A. Deliver hollow metal work palletized, wrapped, or crated to provide protection during transit and Project-site storage. Do not use nonvented plastic.

1. Provide additional protection to prevent damage to finish of factory-finished units.

B. Store hollow metal work under cover at Project site. Place in stacks of five units maximum in a vertical position with heads up, spaced by blocking, on minimum 4-inch- (102-mm-) high wood blocking. Do not store in a manner that traps excess humidity.

1. Provide minimum 1/4-inch (6-mm) space between each stacked door to permit air circulation.

## 1.7 PROJECT CONDITIONS

A. Field Measurements: Verify actual dimensions of openings by field measurements before fabrication.

PART 2 - PRODUCTS

2.1 MANUFACTURERS

A. Manufacturers: Subject to compliance with requirements, **provide products by available manufacturers that will match the existing doors.**

2.2 MATERIALS

A. Cold-Rolled Steel Sheet: ASTM A 1008/A 1008M, Commercial Steel (CS), Type B; suitable for exposed applications.

B. Hot-Rolled Steel Sheet: ASTM A 1011/A 1011M, Commercial Steel (CS), Type B; free of scale, pitting, or surface defects; pickled and oiled.

C. Metallic-Coated Steel Sheet: ASTM A 653/A 653M, Commercial Steel (CS), Type B; with minimum **A40 (ZF120) G60 (Z180) or A60 (ZF180)** metallic coating.

D. Inserts, Bolts, and Fasteners: Hot-dip galvanized according to ASTM A 153/A 153M.

E. Mineral-Fiber Insulation: ASTM C 665, Type I (blankets without membrane facing); consisting of fibers manufactured from slag or rock wool with 6- to 12-lb/cu. ft. (96- to 192-kg/cu. m) density; with maximum flame-spread and smoke-development indexes of 25 and 50, respectively; passing ASTM E 136 for combustion characteristics.

F. Glazing: Comply with requirements in Division 08 Section "Glazing."

G. Bituminous Coating: Cold-applied asphalt mastic, SSPC-Paint 12, compounded for 15-mil (0.4-mm) dry film thickness per coat. Provide inert-type noncorrosive compound free of asbestos fibers, sulfur components, and other deleterious impurities.

2.3 STANDARD HOLLOW METAL DOORS

A. General: Provide doors of design indicated, not less than thickness indicated; fabricated with smooth surfaces, without visible joints or seams on exposed faces unless otherwise indicated. Comply with ANSI/SDI A250.8.

1. Design: Match the existing doors, coordinate with Facility Manager.
2. Core Construction: Manufacturer's standard kraft-paper honeycomb, polystyrene, polyurethane, polyisocyanurate, mineral-board, or vertical steel-stiffener core.

3. Vertical Edges for Single-Acting Doors: Match existing.
4. Top and Bottom Edges: Closed with flush or inverted 0.042-inch- (1.0-mm-) thick, end closures or channels of same material as face sheets.
5. Tolerances: Comply with SDI 117, "Manufacturing Tolerances for Standard Steel Doors and Frames."

B. Exterior Doors: Face sheets fabricated from metallic-coated steel sheet. Provide doors complying with requirements indicated below by referencing ANSI/SDI A250.8 for level and model and ANSI/SDI A250.4 for physical performance level:

1. Levels and Physical Performance Levels to match existing doors, coordinate with Architects.

a. Width: match existing.

## 2.4 LOUVERS

A. Provide louvers for doors, where indicated, that comply with SDI 111C, with blades or baffles formed of 0.020-inch- ((0.5-mm-)) thick, cold-rolled steel sheet set into 0.032-inch- (0.8-mm-) thick steel frame.

1. Sightproof Louver: Stationary louvers constructed with inverted V-shaped or Y-shaped blades.
2. Lightproof Louver: Stationary louvers constructed with baffles to prevent light from passing from one side to the other, any angle.
3. Fire-Rated Automatic Louvers: Louvers constructed with movable blades closed by actuating fusible link, and listed and labeled for use in fire-rated door assemblies of type and fire-resistance rating indicated by same testing and inspecting agency that established fire-resistance rating of door assembly.

## 2.5 ACCESSORIES

A. Mullions and Transom Bars: Join to adjacent members by welding or rigid mechanical anchors.

B. Ceiling Struts: Minimum 1/4-inch-thick by 1-inch- (6.4-mm-thick by 25.4-mm-) wide steel.

C. Grout Guards: Formed from same material as frames, not less than 0.016 inch (0.4 mm) thick.

## 2.6 FABRICATION

A. Fabricate hollow metal work to be rigid and free of defects, warp, or buckle. Accurately form metal to required sizes and profiles, with minimum radius for thickness of metal. Where practical, fit and assemble units in manufacturer's plant. To ensure proper assembly at Project site, clearly identify work that cannot be permanently factory assembled before shipment.

B. Tolerances: Fabricate hollow metal work to tolerances indicated in **SDI 117**.

C. Hollow Metal Doors:

1. Exterior Doors: Provide weep-hole openings in bottom of exterior doors to permit moisture to escape. Seal joints in top edges of doors against water penetration.

2. Glazed Lites: Factory cut openings in doors if necessary.

2.7 STEEL FINISHES

A. Prime Finish: Apply manufacturer's standard primer immediately after cleaning and pretreating.

B. Factory-Applied Paint Finish: Manufacturer's standard, complying with ANSI/SDI A250.3 for performance and acceptance criteria.

2.8 Color and Gloss: As selected by Owner from manufacturer's full range to match existing.

PART 3 - EXECUTION

3.1 EXAMINATION

A. Examine substrates, areas, and conditions, with Installer present, for compliance with requirements for installation tolerances and other conditions affecting performance of the Work.

B. Examine roughing-in for embedded and built-in anchors to verify actual locations before frame installation.

C. For the record, prepare written report, endorsed by Installer, listing conditions detrimental to performance of the Work, if requested by the Architect.

D. Proceed with installation only after unsatisfactory conditions have been corrected.

3.2 PREPARATION

A. Drill and tap doors and frames to receive nontemplated, mortised, and surface-mounted door hardware.

3.3 INSTALLATION

A. General: Install hollow metal work plumb, rigid, properly aligned, and securely fastened in place; comply with Drawings and manufacturer's written instructions.

B. Hollow Metal Doors: Fit hollow metal doors accurately in frames, within clearances specified below. Shim as necessary.

1. Non-Fire-Rated Standard Steel Doors:

a. Jambs and Head: 1/8 inch (3 mm) plus or minus 1/16 inch (1.6 mm).
b. Between Edges of Pairs of Doors: 1/8 inch (3 mm) plus or minus 1/16 inch (1.6 mm).
c. Between Bottom of Door and Top of Threshold: Maximum 3/8 inch (9.5 mm).

d. Between Bottom of Door and Top of Finish Floor (No Threshold): Maximum 3/4 inch (19 mm).

## 3.4 ADJUSTING AND CLEANING

A. Final Adjustments: Check and readjust operating hardware items immediately before final inspection. Leave work in complete and proper operating condition. Remove and replace defective work, including hollow metal work that is warped, bowed, or otherwise unacceptable.

B. Metallic-Coated Surfaces: Clean abraded areas and repair with galvanizing repair paint according to manufacturer's written instructions.

END OF SECTION 081113

# SECTION 083323 - OVERHEAD COILING DOORS

## PART 1 - GENERAL

### 1.1 RELATED DOCUMENTS

A. Drawings and general provisions of the Contract, including General and Supplementary Conditions and Division 01 Specification Sections, apply to this Section.

### 1.2 SUMMARY

A. Section Includes:

B. Related Sections:

1. Division 05 Section "Metal Fabrications" for miscellaneous steel supports.
2. Division 26 Sections for electrical service and connections for powered operators and accessories.

### 1.3 PERFORMANCE REQUIREMENTS

A. Structural Performance, Exterior Doors: Exterior overhead coiling doors shall withstand the wind loads, the effects of gravity loads, and loads and stresses within limits and under conditions indicated according to **SEI/ASCE 7**.

1. Wind Loads: **Uniform pressure (velocity pressure) of 20 lbf/sq. ft. (960 Pa), acting inward and outward**

   a. Basic Wind Speed: **85 mph (38 m/s)**

2. Deflection Limits: Design overhead coiling doors to withstand design wind load without evidencing permanent deformation or disengagement of door components.

B. Operability under Wind Load: Design overhead coiling doors to remain operable under **uniform pressure (velocity pressure) of 20 lbf/sq. ft. (960 Pa)** wind load, acting inward and outward.

C. Windborne-Debris-Impact-Resistance Performance: Provide **impact-protective** overhead coiling doors that pass missile-impact and cyclic-pressure tests when tested according to **ASTM E 1886 and ASTM E 1996**.

1. Large Missile Test: For overhead coiling doors located within 30 feet (9.144 m) of grade.

D. Seismic Performance: Overhead coiling doors shall withstand the effects of earthquake motions determined according to **SEI/ASCE 7**.

1. The term "withstand" means "the unit will remain in place without separation of any parts from the device when subjected to the seismic forces specified."
2. Seismic Component Importance Factor: **1.0**.

E. Operation Cycles: Provide overhead coiling door components and operators capable of operating for not less than number of cycles indicated for each door. One operation cycle is complete when a door is opened from the closed position to the fully open position and returned to the closed position.

## 1.4 SUBMITTALS

A. Product Data: For each type and size of overhead coiling door and accessory. Include the following:

1. Construction details, material descriptions, dimensions of individual components, profiles for slats, and finishes.
2. Rated capacities, operating characteristics, electrical characteristics, and furnished accessories.

B. Shop Drawings: For each installation and for special components not dimensioned or detailed in manufacturer's product data. Include plans, elevations, sections, details, and attachments to other work.

1. Detail equipment assemblies and indicate dimensions, weights, loads, required clearances, method of field assembly, components, and location and size of each field connection.
2. Wiring Diagrams: For power, signal, and control wiring.

C. Samples for Initial Selection: Manufacturer's finish charts showing full range of colors and textures available for units with factory-applied finishes.

1. Include similar Samples of accessories involving color selection.

D. Samples for Verification: For each type of exposed finish required, prepared on Samples of size indicated below.

1. Curtain Slats: 12 inches (305 mm) long.
2. Bottom Bar: 6 inches (150 mm) long
3. Guides: 6 inches (150 mm) long.
4. Brackets: 6 inches (150 mm) square.
5. Hood: 6 inches (150 mm) square.

6. Detail fabrication and assembly of seismic restraints.

E. Qualification Data: For qualified Installer.

F. Seismic Qualification Certificates: For overhead coiling doors**,** accessories, and components, from manufacturer.

G. Maintenance Data: For overhead coiling doors to include in maintenance manuals.

## 1.5 QUALITY ASSURANCE

A. Installer Qualifications: Manufacturer's authorized representative who is trained and approved for both installation and maintenance of units required for this Project.

B. Source Limitations: Obtain overhead coiling doors from single source from single manufacturer.

1. Obtain operators and controls from overhead coiling door manufacturer.
2. Temperature-Rise Limit: **At vertical exit enclosures and exit passageways**, provide doors that have a maximum transmitted temperature end point of not more than 450 deg F (250 deg C) above ambient after 30 minutes of standard fire-test exposure.

C. Sound-Control Doors: Assemblies that have been fabricated and tested to control the passage of sound and have minimum certified STC rating according to ASTM E 413.

D. Electrical Components, Devices, and Accessories: Listed and labeled as defined in NFPA 70, by a qualified testing agency, and marked for intended location and application.

E. Regulatory Requirements: Comply with applicable provisions in **the U.S. Architectural & Transportation Barriers Compliance Board's ADA-ABA Accessibility Guidelines**.

# PART 2 - PRODUCTS

## 2.1 DOOR CURTAIN MATERIALS AND CONSTRUCTION

A. Door Curtains: Fabricate overhead coiling-door curtain of interlocking metal slats, designed to withstand wind loading indicated, in a continuous length for width of door without splices. Unless otherwise indicated, provide slats of thickness and mechanical properties recommended by door manufacturer for performance, size, and type of door indicated, and as follows:

1. Steel Door Curtain Slats: Zinc-coated (galvanized), cold-rolled structural steel sheet; complying with ASTM A 653/A 653M, with G90 (Z275) zinc coating; nominal sheet thickness (coated) of 0.028 inch (0.71 mm) and as required to meet requirements.
2. Stainless-Steel Door Curtain Slats: ASTM A 666, Type 304; sheet thickness of 0.025 inch (0.64 mm) and as required to meet requirements.
3. Aluminum Door Curtain Slats: ASTM B 209 (ASTM B 209M) sheet or ASTM B 221 (ASTM B 221M) extrusions, alloy and temper standard with manufacturer for type of use and finish indicated; thickness of 0.050 inch (1.27 mm) and as required to meet requirements.

B. Endlocks and Windlocks for Service Doors: Malleable-iron casings galvanized after fabrication, secured to curtain slats with galvanized rivets or high-strength nylon. Provide locks on not less than alternate curtain slats for curtain alignment and resistance against lateral movement.

C. Bottom Bar for Service Doors: Consisting of two angles, each not less than 1-1/2 by 1-1/2 by 1/8 inch (38 by 38 by 3 mm) thick; fabricated from manufacturer's standard hot-dip galvanized steel, stainless steel, or aluminum extrusions to match curtain slats and finish.

D. Curtain Jamb Guides: Manufacturer's standard angles or channels and angles of same material and finish as curtain slats unless otherwise indicated, with sufficient depth and strength to retain curtain, to allow curtain to operate smoothly, and to withstand loading. Slot bolt holes for guide adjustment. Provide removable stops on guides to prevent overtravel of curtain**,** and a continuous bar for holding windlocks.

1. Removable Posts and Jamb Guides for Counter Doors: Manufacturer's standard.
2. Rigid Frame: Rigid pass door and frame that are built into the rigid, lower part of the door curtain and that raise with the curtain.
3. Locking Hardware:

   a. **Lockset**:**As selected by Owner from manufacturer's full range.**
   b. Lock Cylinders: Provide cylinders **standard with manufacturer and keyed to building keying system**.
   c. Keys: **Three**for each cylinder.

4. Thresholds: Equip pass doors with integral thresholds that comply with egress and accessibility requirements of authorities having jurisdiction.

## 2.2 HOOD

A. General: Form sheet metal hood to entirely enclose coiled curtain and operating mechanism at opening head. Contour to fit end brackets to which hood is attached. Roll and reinforce top and bottom edges for stiffness. Form closed ends for surface-mounted hoods and fascia for any portion of between-jamb mounting that projects beyond wall face. Equip hood with intermediate support brackets as required to prevent sagging.

1. Galvanized Steel: Nominal 0.028-inch- (0.71-mm-) thick, hot-dip galvanized steel sheet with G90 (Z275) zinc coating, complying with ASTM A 653/A 653M.
2. Aluminum: 0.040-inch- (1.02-mm-) thick aluminum sheet complying with ASTM B 209 (ASTM B 209M), of alloy and temper recommended by manufacturer and finisher for type of use and finish indicated.
3.
4. Exterior-Mounted Doors: Fabricate hood to act as weather protection and with a perimeter sealant-joint-bead profile for applying joint sealant.

## 2.3 LOCKING DEVICES

A. Locking Device Assembly: Fabricate with cylinder lock, spring-loaded dead bolt, operating handle, cam plate, and adjustable locking bars to engage through slots in tracks.

1. Lock Cylinders: Provide cylinders **standard with manufacturer and keyed to building keying system**.
2. Keys: Provide **Three** for each cylinder.

B. Chain Lock Keeper: Suitable for padlock.

C. Safety Interlock Switch: Equip power-operated doors with safety interlock switch to disengage power supply when door is locked.

## 2.4 CURTAIN ACCESSORIES

A. Weatherseals: Equip each exterior door with weather-stripping gaskets fitted to entire perimeter of door for a weathertight installation, unless otherwise indicated.

1. At door head, use 1/8-inch- (3-mm-) thick, replaceable, continuous sheet secured to inside of hood.
2. At door jambs, use replaceable, adjustable, continuous, flexible, 1/8-inch- (3-mm-) thick seals of flexible vinyl, rubber, or neoprene.

B. Push/Pull Handles: Equip each push-up-operated or emergency-operated door with lifting handles on each side of door, finished to match door.

1. Provide pull-down straps or pole hooks for doors more than 84 inches (2130 mm) high.

## 2.5 COUNTERBALANCING MECHANISM

A. General: Counterbalance doors by means of manufacturer's standard mechanism with an adjustable-tension, steel helical torsion spring mounted around a steel shaft and contained in a spring barrel connected to top of curtain with barrel rings. Use grease-sealed bearings or self-lubricating graphite bearings for rotating members.

B. Counterbalance Barrel: Fabricate spring barrel of manufacturer's standard hot-formed, structural-quality, welded or seamless carbon-steel pipe, of sufficient diameter and wall thickness to support rolled-up curtain without distortion of slats and to limit barrel deflection to not more than 0.03 in./ft. (2.5 mm/m) of span under full load.

C. Spring Balance: One or more oil-tempered, heat-treated steel helical torsion springs. Size springs to counterbalance weight of curtain, with uniform adjustment accessible from outside barrel. Secure ends of springs to barrel and shaft with cast-steel barrel plugs.

D. Torsion Rod for Counterbalance Shaft: Fabricate of manufacturer's standard cold-rolled steel, sized to hold fixed spring ends and carry torsional load.

E. Brackets: Manufacturer's standard mounting brackets of either cast iron or cold-rolled steel plate.

## 2.6 MANUAL DOOR OPERATORS

A. Equip door with manufacturer's recommended manual door operator unless another type of door operator is indicated.

B. Chain-Hoist Operator: Consisting of endless steel hand chain, chain-pocket wheel and guard, and gear-reduction unit with a maximum [**25 lbf (111 N)**] [**30 lbf (133 N)**] <**Insert force**> force for door operation. Provide alloy-steel hand chain with chain holder secured to operator guide.

## 2.7 ELECTRIC DOOR OPERATORS

A. General: Electric door operator assembly of size and capacity recommended and provided by door manufacturer for doorspecified, with electric motor and factory-prewired motor controls, starter, gear-reduction unit, solenoid-operated brake, clutch, remote-control stations, control devices, integral gearing for locking door, and accessories required for proper operation.

1. Comply with NFPA 70.
2. Provide control equipment complying with NEMA ICS 1, NEMA ICS 2, and NEMA ICS 6, with NFPA 70 Class 2 control circuit, maximum 24 V, ac or dc.

B. Usage Classification: Electric operator and components capable of operating for not less than number of cycles per hour indicated for each door.

C. Door Operator Location(s): Operator location indicated for each door.
1. Wall Mounted: Operator is mounted to the inside front wall on the left or right side of door and connected to door drive shaft with drive chain and sprockets. Side room is required for this type of mounting. Wall mounted operator can also be mounted above or below shaft; if above shaft, headroom is required.

D. Electric Motors: Comply with NEMA designation, temperature rating, service factor, enclosure type, and efficiency requirements specified in Division 11 Section "Common Motor Requirements for Equipment" unless otherwise indicated.

1. Electrical Characteristics:

a. Phase: **Single phase**.
b. Volts: **115** V.
c. Hertz: 60.

2. Motor Type and Controller: Reversible motor and controller (disconnect switch) for motor exposure indicated.
3. Motor Size: Minimum size as indicated. If not indicated, large enough to start, accelerate, and operate door in either direction from any position, at a speed not less than 8 in./sec. (203 mm/s) and not more than 12 in./sec. (305 mm/s), without exceeding nameplate ratings or service factor.
4. Operating Controls, Controllers (Disconnect Switches), Wiring Devices, and Wiring: Manufacturer's standard unless otherwise indicated.
5. Coordinate wiring requirements and electrical characteristics of motors and other electrical devices with building electrical system and each location where installed.

E. Limit Switches: Equip each motorized door with adjustable switches interlocked with motor controls and set to automatically stop door at fully opened and fully closed positions.

1. Obstruction Detection Device: Equip motorized door with indicated external automatic safety sensor capable of protecting full width of door opening. **For non-fire-rated doors, activation of device immediately stops and reverses downward door travel**Sensor Edge: Automatic safety sensor edge, located within astragal or weather stripping mounted to bottom bar. Contact with sensor activates device. Connect to control circuit using manufacturer's standard take-up reel or self-coiling cable.

    a. Self-Monitoring Type: Four-wire configured device designed to interface with door operator control circuit to detect damage to or disconnection of sensor edge.

F. Remote-Control Station: Momentary-contact, three-button control station with push-button controls labeled "Open," "Close," and "Stop."

1. Interior units, full-guarded, surface-mounted, heavy-duty type, with general-purpose NEMA ICS 6, Type 1 enclosure.
2. Exterior units, full-guarded, standard-duty, surface-mounted, weatherproof type, NEMA ICS 6, Type 4 enclosure, key operated.

G. Emergency Manual Operation: Equip each electrically powered door with capability for emergency manual operation. Design manual mechanism so required force for door operation does not exceed **25 lbf (111 N)**

H. Emergency Operation Disconnect Device: Equip operator with hand-operated disconnect mechanism for automatically engaging manual operator and releasing brake for emergency manual operation while disconnecting motor without affecting timing of limit switch. Mount mechanism so it is accessible from floor level. Include interlock device to automatically prevent motor from operating when emergency operator is engaged.

I. Motor Removal: Design operator so motor may be removed without disturbing limit-switch adjustment and without affecting emergency manual operation.

J. Audible and Visual Signals: Audible alarm and visual indicator lights in compliance with regulatory requirements for accessibility.

## 2.8 DOOR ASSEMBLY

A. **Service** Door: Overhead coiling door formed with curtain of interlocking metal slats.

1. Manufacturers: Subject to compliance with requirements, **provide products by one of the following available manufacturers offering products that may be incorporated into the Work include, but are not limited to, the following**:

    a. ACME Rolling Doors.
    b. AlumaTek, Inc.
    c.
    d. Overhead Door Corporation.

B. Operation Cycles: Not less than **10,000**.

C. Door Curtain Material: **Galvanized steel**, and **Aluminum as indicated in drawings**.

D. Door Curtain Slats: **Curved** or **Flat** profile slats of **2-5/8-inch (67-mm)** center-to-center height.

**E.** Ho**od: Match curtain material and finish Galvanized steel Aluminum.**

1. Shape: **Square**.
2. Mounting: **Face of wall As shown on Drawings**.

F. Locking Devices: Equip door with**slide bolt for padlocklocking device assemblyand chain lock keeper**.

1. Locking Device Assembly: **Single-jamb side** locking bars, operable from**inside and outside with cylinders**.

G. Manual Door Operator: **Chain-hoist operator** .

H. Electric Door Operator:

1. Usage Classification: **Heavy duty, 60 to 90 cycles per hour**.
2. Operator Location: **Wall Bench As shown on Drawings**.
3. Motor Exposure: **Interior**.
4. Emergency Manual Operation: **Push-up Chain** type.
5. Obstruction-Detection Device: Automatic [**electric sensor edge on bottom bar**

   a. Sensor Edge Bulb Color: **Black**

6. R**emote-Control S**tation: **InteriorWhere existing located.**
7. **Other Equipment: Audible and visual signals**

I. Door Finish:

1. Aluminum Finish: **Anodized color as selected by Owner to match existing from full range of industry colors and color densities**.
2. Baked-Enamel or Powder-Coated Finish: **Color as selected by Owner to match existing from manufacturer's full range**.
3. Factory Prime Finish: Manufacturer's standard color.
4. .
5. Interior Curtain-Slat Facing: **Match finish of exterior curtain-slat face**.

J. Door Finish:

1. Baked-Enamel or Powder-Coated Finish: **Color matching existing Color as selected by Architect from manufacturer's full range**.
2. Factory Prime Finish: Manufacturer's standard color.
3. Interior Curtain-Slat Facing: **Match finish of exterior curtain-slat face**.

2.9 GENERAL FINISH REQUIREMENTS

A. Comply with NAAMM's "Metal Finishes Manual for Architectural and Metal Products" for recommendations for applying and designating finishes.

B. Appearance of Finished Work: Noticeable variations in same piece are not acceptable. Variations in appearance of adjoining components are acceptable if they are within the range of approved Samples and are assembled or installed to minimize contrast.

2.10 ALUMINUM FINISHES

A. Color Anodic Finish: AAMA 611, or thicker.

B. Baked-Enamel or Powder-Coat Finish: AAMA 2603. Comply with coating manufacturer's written instructions for cleaning, conversion coating, application, and baking.

2.11 STEEL AND GALVANIZED-STEEL FINISHES

A. Factory Prime Finish: Manufacturer's standard primer, compatible with field-applied finish. Comply with coating manufacturer's written instructions for cleaning, pretreatment, application, and minimum dry film thickness.

B. Baked-Enamel or Powder-Coat Finish: Manufacturer's standard baked-on finish consisting of prime coat and thermosetting topcoat. Comply with coating manufacturer's written instructions for cleaning, pretreatment, application, and minimum dry film thickness.

PART 3 - EXECUTION

3.1 EXAMINATION

A. Examine substrates areas and conditions, with Installer present, for compliance with requirements for substrate construction and other conditions affecting performance of the Work.

B. Examine locations of electrical connections.

C. Proceed with installation only after unsatisfactory conditions have been corrected.

3.2 INSTALLATION

A. Install overhead coiling doors and operating equipment complete with necessary hardware, anchors, inserts, hangers, and equipment supports; according to manufacturer's written instructions and as specified.

B. Install overhead coiling doors, hoods, and operators at the mounting locations indicated for each door.

C. Accessibility: Install overhead coiling doors, switches, and controls along accessible routes in compliance with regulatory requirements for accessibility.

## 3.3 STARTUP SERVICE

A. Engage a factory-authorized service representative to perform startup service.

1. Perform installation and startup checks according to manufacturer's written instructions.
2. Test and adjust controls and safeties. Replace damaged and malfunctioning controls and equipment.
3. Test door closing when activated by detector or alarm-connected fire-release system. Reset door-closing mechanism after successful test.

## 3.4 ADJUSTING

A. Adjust hardware and moving parts to function smoothly so that doors operate easily, free of warp, twist, or distortion.

B. Lubricate bearings and sliding parts as recommended by manufacturer.

C. Adjust seals to provide weathertight fit around entire perimeter.

## 3.5 DEMONSTRATION

A. Engage a factory-authorized service representative to train Owner's maintenance personnel to adjust, operate, and maintain overhead coiling doors.

END OF SECTION 083323

# SECTION 086300 - METAL-FRAMED SKYLIGHTS

## PART 1 - GENERAL

### 1.1 RELATED DOCUMENTS

A. Drawings and general provisions of the Contract, including General and Supplementary Conditions and Division 01 Specification Sections, apply to this Section.

### 1.2 SUMMARY

A. Section includes skylights with metal framing.

B. Related Sections:

### 1.3 SUBMITTALS

A. Product Data: For each type of product indicated. Include construction details, material descriptions, dimensions of individual components and profiles, and finishes for metal-framed skylights.

B. Shop Drawings: For metal-framed skylights. Include plans, elevations, sections, details, and attachments to other work.

1. Include details of provisions for assembly expansion and contraction and for draining moisture within the assembly to the exterior.
2. Include full-size isometric details of each vertical-to-horizontal intersection of assembly, showing the following:

    a. Joinery including concealed welds.
    b. Anchorage.
    c. Expansion provisions.
    d. Glazing.
    e. Flashing and drainage.

3. Include laboratory mockup Shop Drawings, prepared by a qualified preconstruction testing agency, showing details of laboratory mockup.

C. Samples for Initial Selection: For units with factory-applied color finishes.

D. Samples for Verification: For each type of exposed finish required, in manufacturer's standard sizes.

E. Fabrication Sample: Of each framing intersection of assemblies, made from 12-inch (305-mm) lengths of full-size components and showing details of the following:

1. Joinery including concealed welds.
2. Anchorage.
3. Expansion provisions.
4. Glazing.
5. Flashing and drainage.

F. Delegated-Design Submittal: For metal-framed skylights indicated to comply with performance requirements and design criteria, including analysis data signed and sealed by the qualified professional engineer responsible for their preparation.

G. Qualification Data: For qualified Installer.

H. Preconstruction Test Reports: Prepared by a qualified preconstruction testing agency.

I. Compatibility and Adhesion Test Reports: For structural-sealant-glazed skylights, test reports from sealant manufacturer indicating that joint sealants have been tested for each material that will come in contact with sealants.

J. Product Test Reports: Based on evaluation of comprehensive tests performed by a qualified testing agency, for metal-framed skylights.

K. Warranties: Sample of special warranties.

## 1.4 QUALITY ASSURANCE

A. Installer Qualifications: Manufacturer's authorized representative who is trained and approved for installation of metal-framed skylights required for this Project.

B. Testing Agency Qualifications: Qualified according to ASTM E 699 for testing indicated.

C. Welding Qualifications: Qualify procedures and personnel according to AWS D1.2/D1.2M, "Structural Welding Code - Aluminum."

D. Structural-Sealant Glazing: Comply with recommendations in ASTM C 1401, "Guide for Structural Sealant Glazing," for joint design and quality-control procedures.

E. Provide metal-framed skylights that comply with test-performance requirements indicated, as evidenced by reports **of tests performed on manufacturer's standard assemblies** by a qualified independent testing agency.

F. Mockups: Build mockups to verify selections made under sample submittals and to set quality standards for fabrication and installation.
   1. Approved mockups may become part of the completed Work if undisturbed at time of Substantial Completion.

1.5 WARRANTY

A. Special Warranty: Manufacturer's standard form in which manufacturer agrees to repair or replace components of metal-framed skylights that fail in materials or workmanship within specified warranty period.

1. Failures include, but are not limited to, the following:

a. Structural failures including, but not limited to, excessive deflection.
b. Noise or vibration caused by thermal movements.
c. Deterioration of metals**,** metal finishes**,** and other materials beyond normal weathering.
d. Adhesive or cohesive sealant failures.
e. Water leakage.

2. Warranty Period: **10** years from date of Substantial Completion.

B. Special Finish Warranty: Manufacturer's standard form in which manufacturer agrees to repair or replace components on which finishes fail within specified warranty period. Warranty does not include normal weathering.

1. Failures include, but are not limited to, checking, crazing, peeling, chalking, and fading of finishes.
2. Warranty Period: **10** years from date of Substantial Completion.

PART 2 - PRODUCTS

2.1 MANUFACTURERS

A. Manufacturers: Subject to compliance with requirements, **provide products by one of the following available manufacturers offering products that may be incorporated into the Work**:

1. Acralight International Skylights.
2. Architectural Glazing Technologies.
3. Bristolite Skylights.
4. CPI Daylighting, Inc.
5. Exarc Skylights, Inc.
6. Gammans Skylight Systems.
7. GSI Glazed Structures, Inc.
8. Kawneer North America; an Alcoa company.
9. LinEl Signature.
10. Major Industries, Inc.; Auburn Skylights Division.
11. Naturalite Skylight Systems; Vistawall Group.
12. O'Keeffe's Inc.
13. Schuco USA, LP.
14. Skyline Sky-Lites, LLC.
15. Sunglo Skylight Products.

16. Super Sky Products, Inc.
17. J. Sussman, Inc.
18. TRACO.
19. United Skys, Inc.
20. Wasco Products, Inc.

## 2.2 PERFORMANCE REQUIREMENTS

A. General: Metal-framed skylights shall withstand the effects of the following without failure due to defective manufacture, fabrication, installation, or other defects in construction:

1. Structural loads.
2. Thermal movements.
3. Movements of supporting structure.
4. Dimensional tolerances of support system and other adjacent construction.
5. Failure includes, but is not limited to, the following:

   a. Deflection exceeding specified limits.
   b. Framing members transferring stresses, including those caused by thermal and structural movements to glazing.
   c. Glazing-to-glazing contact.
   d. Noise or vibration created by wind and by thermal and structural movements.
   e. Loosening or weakening of fasteners, attachments, and other components.
   f. Sealant failure.

B. Structural Loads:

1. Wind Loads:

   a. Basic Wind Speed: **110 mph (49 m/s)**.
   b. Importance Factor: 1.15
   c. Exposure Category: **B.**

2. Seismic Loads: Seismic Design Category "C"

C. Windborne-Debris-Impact-Resistance Performance: Provide metal-framed skylights that pass missile-impact and cyclic-pressure tests when tested according to ASTM E 1886 and testing information in ASTM E 1996 for Wind **Zone 2**

1. Large-Missile Test: For glazed openings located within 30 feet (9.1 m) of grade.
2. Small-Missile Test: For glazed openings located more than 30 feet (9.1 m) above grade.

D. Air Infiltration: Provide metal-framed skylights with maximum air leakage through fixed glazing and framing areas of **0.06 cfm/sq. ft. (0.03 L/s per sq. m)** of fixed wall area when tested according to ASTM E 283 at a minimum static-air-pressure difference of **1.57 lbf/sq. ft. (75 Pa)**.

E. Water Penetration under Static Pressure: Provide metal-framed skylights that do not evidence water penetration through fixed glazing and framing areas when tested according to

ASTM E 331 at a minimum static-air-pressure difference of 20 percent of positive wind-load design pressure, but not less than **6.24 lbf/sq. ft. (300 Pa)**.

F. Water Penetration under Dynamic Pressure: Provide metal-framed skylights that do not evidence water leakage through fixed glazing and framing areas when tested according to AAMA 501.1 under dynamic pressure equal to 20 percent of positive wind-load design pressure, but not less than [**6.24 lbf/sq. ft. (300 Pa)**

1. Maximum Water Leakage: **According to AAMA 501.1**. Water leakage does not include water controlled by flashing and gutters that is drained to exterior and water that cannot damage adjacent materials or finishes.

G. Thermal Movements: Provide metal-framed skylights that allow for thermal movements resulting from the following maximum change (range) in ambient and surface temperatures. Base engineering calculations on surface temperatures of materials due to both solar heat gain and nighttime-sky heat loss.

1. Temperature Change (Range): **120 deg F (67 deg C), ambient; 180 deg F (100 deg C)**, material surfaces.

H. Condensation Resistance: Provide metal-framed skylights with fixed glazing and framing areas having condensation-resistance factor (CRF) of not less than **45** when tested according to AAMA 1503.

I. Structural Sealant: Capable of withstanding tensile and shear stresses imposed without failing adhesively or cohesively. When tested for preconstruction adhesion and compatibility, cohesive failure of sealant shall occur before adhesive failure.

J. Energy Performance: Provide metal-framed skylights with performance properties specified, as indicated in manufacturer's published test data, based on procedures indicated below:

1. Thermal Transmittance (U-Factor): Fixed glazing and framing areas shall have U-factor of not more than**0.65 Btu/sq. ft. x h x deg F (3.69 W/sq. m x K)** as determined according to NFRC 100.
2. Solar Heat Gain Coefficient: Fixed glazing and framing areas shall have a solar heat gain coefficient of no greater than **0.7** as determined according to NFRC 200.

## 2.3 FRAMING SYSTEMS

A. Aluminum: Alloy and temper recommended in writing by manufacturer for type of use and finish indicated.

1. Sheet and Plate: ASTM B 209 (ASTM B 209M).
2. Extruded Bars, Rods, Profiles, and Tubes: ASTM B 221 (ASTM B 221M).
3. Extruded Structural Pipe and Tubes: ASTM B 429/B 429M.
4. Structural Profiles: ASTM B 308/B 308M.
5. Welding Rods and Bare Electrodes: AWS A5.10/A5.10M.

B. Pressure Caps: Manufacturer's standard aluminum components that mechanically retain glazing.

C. Brackets and Reinforcements: Manufacturer's standard high-strength aluminum with nonstaining, nonferrous shims for aligning skylight components.

D. Fasteners and Accessories: Manufacturer's standard, corrosion-resistant, nonstaining, nonbleeding fasteners and accessories compatible with adjacent materials.
   1. Use exposed fasteners with countersunk Phillips screw heads**, finished to match framing system** or**, fabricated from Series 300 stainless steel**.

E. Concrete and Masonry Inserts: Hot-dip galvanized cast-iron, malleable-iron, or steel inserts complying with ASTM A 123/A 123M or ASTM A 153/A 153M requirements.

F. Concealed Flashing: **Manufacturer's standard, corrosion-resistant, nonstaining, nonbleeding flashing compatible with adjacent materials**.

G. Exposed Flashing and Closures: Manufacturer's standard aluminum components not less than **0.060 inch (1.524 mm)** thick.

H. Framing Gaskets: **Manufacturer's standard**.

I. Framing Sealants: As **recommended in writing by manufacturer.**

J. Corrosion-Resistant Coating: Cold-applied asphalt mastic, compounded for 15-mil (0.4-mm) dry film thickness per coat. Provide inert-type noncorrosive compound free of asbestos fibers, sulfur components, and other deleterious impurities.

## 2.4 GLAZING

A. Spacers, Setting Blocks, and Gaskets: **Manufacturer's standard elastomeric types.**

B. Bond-Breaker Tape: **Manufacturer's standard tetrafluoroethylene-fluorocarbon or polyethylene material to which sealants will not develop adhesion**

C. Glazing Sealants: As **recommended in writing by manufacturer.**

   1. Provide sealants for use inside of the weatherproofing system that have a VOC content as indicated when calculated according to 40 CFR 59, Subpart D (EPA Method 24).
   2. Structural Sealant: ASTM C 1184, neutral-curing silicone formulation compatible with system components with which it comes in contact, specifically formulated and tested for use as structural sealant, and approved by structural-sealant manufacturer for use in metal-framed skylights indicated.

      a. VOC Content: **100** g/L or less.
      b. Color: **Black**.

   3. Weatherseal Sealant: ASTM C 920 for Type S, Grade NS, Class 25, Uses NT, G, A, and O; neutral-curing silicone formulation compatible with structural sealant and other

components with which it comes in contact; and recommended in writing by structural- and weatherseal-sealant and metal-framed skylight manufacturers for this use.

a. VOC Content: **250** g/L or less.
b. Color: Matching structural sealant.

## 2.5 FABRICATION

A. Where practical, fit and assemble metal-framed skylights in manufacturer's plant. To ensure proper assembly at Project site, clearly identify work that cannot be permanently factory assembled before shipment.

B. Fabricate aluminum components before finishing.

C. Fabricate aluminum components that, when assembled, have the following characteristics:

1. Profiles that are sharp, straight, and free of defects or deformations.
2. Accurately fitted joints with ends coped or mitered.
3. Internal guttering systems or other means to drain water passing joints, condensation occurring within framing members, and moisture migrating within skylight to exterior.
4. Physical and thermal isolation of glazing from framing members.
5. Accommodations for thermal and mechanical movements of glazing and framing to maintain required glazing edge clearances.

D. Fabricate aluminum sill closures with weep holes and for installation as continuous component.

E. Reinforce aluminum components as required to receive fastener threads.

F. Weld aluminum components in concealed locations to greatest extent possible to minimize distortion or discoloration of finish. Remove weld spatter and welding oxides from exposed surfaces by descaling or grinding.

G. Factory-Glazed, Metal-Framed Skylights:

1. Factory install glazing to be 2 layers, with thermal break.
2. Prepare surfaces that will contact structural sealant according to structural-sealant manufacturer's written instructions to ensure compatibility and adhesion. Preparation includes, but is not limited to, cleaning and priming surfaces.

H. After fabrication, clearly mark components to identify their locations in Project according to Shop Drawings.

## 2.6 ALUMINUM FINISHES

A. Color Anodic Finish: **AA-M12C22A32/A34, Class II, 0.010 mm** or thicker.

1. Color: **Black**.
2. Color: **As selected by Owner from full range** .

2.7 SOURCE QUALITY CONTROL

A. Structural-Sealant Glazing: Perform quality-control procedures complying with ASTM C 1401 recommendations including, but not limited to, material qualification procedures, sealant testing, and fabrication reviews and checks.

PART 3 - EXECUTION

3.1 EXAMINATION

A. Examine areas and conditions, with Installer present, for compliance with requirements for installation tolerances and other conditions affecting performance of the Work.

B. Proceed with installation only after unsatisfactory conditions have been corrected.

3.2 INSTALLATION

A. General:

1. Comply with manufacturer's written instructions.
2. Do not install damaged components.
3. Fit joints between aluminum components to produce hairline joints free of burrs and distortion.
4. Rigidly secure nonmovement joints.
5. Install anchors with separators and isolators to prevent metal corrosion and electrolytic deterioration and to prevent impeding movement of moving joints.
6. Weld components in concealed locations to minimize distortion or discoloration of finish. Protect glazing surfaces from welding.
7. Seal joints watertight unless otherwise indicated.

B. Metal Protection: Where aluminum will contact dissimilar materials, protect against galvanic action by painting contact surfaces with protective coating or by installing nonconductive spacers as recommended in writing by manufacturer for this purpose.

C. Install continuous aluminum sill closure with weatherproof expansion joints and locked and sealed or welded corners. Locate weep holes at rafters.

D. Install components to drain water passing joints, condensation occurring within framing members, and moisture migrating within skylight to exterior.

E. Install components plumb and true in alignment with established lines and elevations.

F. Install factory glazing.

1. Structural-Sealant Glazing:

a. Prepare surfaces that will contact structural sealant according to structural-sealant manufacturer's written instructions to ensure compatibility and adhesion. Preparation includes, but is not limited to, cleaning and priming surfaces.
b. Install weatherseal sealant according to Division 07 Section "Joint Sealants" and according to weatherseal-sealant manufacturer's written instructions to produce weatherproof joints. Install joint filler behind weatherseal sealant as recommended in writing by weatherseal-sealant manufacturer.

G. Erection Tolerances: Install metal-framed skylights to comply with the following maximum tolerances:

1. Alignment: Limit offset from true alignment to 1/32 inch (0.8 mm) where surfaces abut in line, edge to edge, at corners, or where a reveal or protruding element separates aligned surfaces by less than 3 inches (76 mm); otherwise, limit offset to 1/8 inch (3.2 mm).
2. Location and Plane: Limit variation from true location and plane to 1/8 inch in 12 feet (3.2 mm in 3.7 m) but no greater than 1/2 inch (13 mm) over total length.

## 3.3 FIELD QUALITY CONTROL

1. Water-Spray Test: Before installation of interior finishes has begun, skylights shall be tested according to AAMA 501.2 and shall not evidence water penetration.

B. Repair or remove work where test results and inspections indicate that it does not comply with specified requirements.

C. Additional testing and inspecting, at Contractor's expense, will be performed to determine compliance of replaced or additional work with specified requirements.

D. Prepare test and inspection reports.

END OF SECTION 086300

# SECTION 099113 - EXTERIOR PAINTING

## PART 1 - GENERAL

### 1.1 RELATED DOCUMENTS

A. Drawings and general provisions of the Contract, including General and Supplementary Conditions and Division 01 Specification Sections, apply to this Section.

### 1.2 SUMMARY

A. Section includes surface preparation and the application of paint systems on **the following exterior substrates:**

1. Concrete.
2. Concrete masonry units (CMU).
3. Steel.
4. Galvanized metal.
5. Wood.
6. Exterior gypsum board.

### 1.3 DEFINITIONS

A. Gloss Level 1: Not more than 5 units at 60 degrees and 10 units at 85 degrees, according to ASTM D 523.

B. Gloss Level 3: 10 to 25 units at 60 degrees and 10 to 35 units at 85 degrees, according to ASTM D 523.

C. Gloss Level 4: 20 to 35 units at 60 degrees and not less than 35 units at 85 degrees, according to ASTM D 523.

D. Gloss Level 5: 35 to 70 units at 60 degrees, according to ASTM D 523.

E. Gloss Level 6: 70 to 85 units at 60 degrees, according to ASTM D 523.

F. Gloss Level 7: More than 85 units at 60 degrees, according to ASTM D 523.

### 1.4 ACTION SUBMITTALS

A. Product Data: For each type of product. Include preparation requirements and application instructions.

B. Samples for Initial Selection: For each type of topcoat product.

C. Samples for Verification: For each type of paint system and each color and gloss of topcoat.

1. Submit Samples on rigid backing, 8 inches (200 mm) square.
2. Step coats on Samples to show each coat required for system.
3. Label each coat of each Sample.
4. Label each Sample for location and application area.

D. Product List: For each product indicated, include the following:

1. Cross-reference to paint system and locations of application areas. Use same designations indicated on Drawings and in schedules.
2. Printout of current "MPI Approved Products List" for each product category specified, with the proposed product highlighted.
3. VOC content.

## 1.5 MAINTENANCE MATERIAL SUBMITTALS

A. Furnish extra materials**,** from the same product run, that match products installed and that are packaged with protective covering for storage and identified with labels describing contents.

1. Paint: **5**percent, but not less than **4 gal.** of each material and color applied.

## 1.6 QUALITY ASSURANCE

A. Mockups: Apply mockups of each paint system indicated and each color and finish selected to verify preliminary selections made under Sample submittals and to demonstrate aesthetic effects and set quality standards for materials and execution.

1. Architect will select one surface to represent surfaces and conditions for application of each paint system specified in Part 3.

   a. Vertical and Horizontal Surfaces: Provide samples of at least 100 sq. ft. (9 sq. m).
   b. Other Items: Architect will designate items or areas required.

2. Final approval of color selections will be based on mockups.

   a. If preliminary color selections are not approved, apply additional mockups of additional colors selected by Architect at no added cost to Owner.

3. Approval of mockups does not constitute approval of deviations from the Contract Documents contained in mockups unless Architect specifically approves such deviations in writing.
4. Subject to compliance with requirements, approved mockups may become part of the completed Work if undisturbed at time of Substantial Completion.

1.7 DELIVERY, STORAGE, AND HANDLING

A. Store materials not in use in tightly covered containers in well-ventilated areas with ambient temperatures continuously maintained at not less than 45 deg F (7 deg C).

1. Maintain containers in clean condition, free of foreign materials and residue.
2. Remove rags and waste from storage areas daily.

1.8 FIELD CONDITIONS

A. Apply paints only when temperature of surfaces to be painted and ambient air temperatures are between 50 and 95 deg F (10 and 35 deg C).

B. Do not apply paints in snow, rain, fog, or mist; when relative humidity exceeds 85 percent; at temperatures less than 5 deg F (3 deg C) above the dew point; or to damp or wet surfaces.

PART 2 - PRODUCTS

2.1 MANUFACTURERS

A. Manufacturers: Subject to compliance with requirements, available manufacturers offering products that may be incorporated into the Work include, but are not limited to, the following:

1. Behr Process Corporation.
2. Benjamin Moore & Co.
3. Del Technical Coatings.
4. ICI Paints.
5. Insl-x.
6. PPG Architectural Finishes, Inc.
7. Sherwin-Williams Company (The).
8. Vista Paint.
9. Zinsser.

B. Products: Subject to compliance with requirements, available products that may be incorporated into the Work include, but are not limited to products listed in other Part 2 articles for the paint category indicated.

2.2 PAINT, GENERAL

A. MPI Standards: Provide products that comply with MPI standards indicated and that are listed in its "MPI Approved Products List."

B. Material Compatibility:

1. Provide materials for use within each paint system that are compatible with one another and substrates indicated, under conditions of service and application as demonstrated by manufacturer, based on testing and field experience.
2. For each coat in a paint system, provide products recommended in writing by manufacturers of topcoat for use in paint system and on substrate indicated.

C. VOC Content: Provide materials that comply with VOC limits of authorities having jurisdiction.

D. Colors: Unless otherwise noted, colors to be finalized based on owner requirements.

2.3 BLOCK FILLERS

A. Block Filler, per top coat manufacture's requirements

2.4 PRIMERS/SEALERS

A. Primer, Alkali Resistant, Water Based: **MPI #3.**

B. Primer, Bonding, Water Based: **MPI #17.**

C. Wood-Knot Sealer: Sealer recommended in writing by topcoat manufacturer for exterior use in paint system indicated.

2.5 METAL PRIMERS

A. Primer, Alkyd, Anti-Corrosive for Metal: **MPI #79.**

B. Primer, Alkyd, Quick Dry, for Metal: **MPI #76.**

C. Primer, Galvanized, Water Based: **MPI #134.**

D. Primer, Galvanized: As recommended in writing by topcoat manufacturer.

2.6 WOOD PRIMERS

A. Primer, Latex for Exterior Wood: **MPI #6.**

B. Primer, Alkyd for Exterior Wood: **MPI #5.**

2.7 WATER-BASED PAINTS

A. Epoxy based, Exterior Flat (Gloss Level 1):

2.8 SOLVENT-BASED PAINTS

A. Alkyd, Exterior Flat (Gloss Level 1): **MPI #8.**

2.9 TEXTURED AND HIGH-BUILD COATINGS

A. Primer for Epoxy Based, Exterior, High Build: As recommended in writing by topcoat manufacturer.

B. Intermediate Coat for Epoxy based, Exterior, High Build: As recommended in writing by topcoat manufacturer.

C. Epoxy based, Exterior, High Build:

2.10 SOURCE QUALITY CONTROL

A. Testing of Paint Materials: Owner reserves the right to invoke the following procedure:

1. Owner will engage the services of a qualified testing agency to sample paint materials. Contractor will be notified in advance and may be present when samples are taken. If paint materials have already been delivered to Project site, samples may be taken at Project site. Samples will be identified, sealed, and certified by testing agency.
2. Testing agency will perform tests for compliance with product requirements.
3. Owner may direct Contractor to stop applying paints if test results show materials being used do not comply with product requirements. Contractor shall remove noncomplying paint materials from Project site, pay for testing, and repaint surfaces painted with rejected materials. Contractor will be required to remove rejected materials from previously painted surfaces if, on repainting with complying materials, the two paints are incompatible.

PART 3 - EXECUTION

3.1 EXAMINATION

A. Examine substrates and conditions, with Applicator present, for compliance with requirements for maximum moisture content and other conditions affecting performance of the Work.

B. Maximum Moisture Content of Substrates: When measured with an electronic moisture meter as follows:

1. Concrete: 12 percent.
2. Masonry (Clay and CMU): 12 percent.
3. Wood: 15 percent.
4. Portland Cement Plaster: 12 percent.
5. Gypsum Board: 12 percent.

C. Portland Cement Plaster Substrates: Verify that plaster is fully cured.

D. Exterior Gypsum Board Substrates: Verify that finishing compound is sanded smooth.

E. Verify suitability of substrates, including surface conditions and compatibility with existing finishes and primers.

F. Proceed with coating application only after unsatisfactory conditions have been corrected.

1. Application of coating indicates acceptance of surfaces and conditions.

## 3.2 PREPARATION

A. Comply with manufacturer's written instructions and recommendations in "MPI Manual" applicable to substrates and paint systems indicated.

B. Remove hardware, covers, plates, and similar items already in place that are removable and are not to be painted. If removal is impractical or impossible because of size or weight of item, provide surface-applied protection before surface preparation and painting.

1. After completing painting operations, use workers skilled in the trades involved to reinstall items that were removed. Remove surface-applied protection.

C. Clean substrates of substances that could impair bond of paints, including dust, dirt, oil, grease, and incompatible paints and encapsulants.

1. Remove incompatible primers and reprime substrate with compatible primers or apply tie coat as required to produce paint systems indicated.

D. Concrete Substrates: Remove release agents, curing compounds, efflorescence, and chalk. Do not paint surfaces if moisture content or alkalinity of surfaces to be painted exceeds that permitted in manufacturer's written instructions.

E. Masonry Substrates: Remove efflorescence and chalk. Do not paint surfaces if moisture content or alkalinity of surfaces or mortar joints exceeds that permitted in manufacturer's written instructions.

F. Steel Substrates: Remove rust, loose mill scale, and shop primer if any. Clean using methods recommended in writing by paint manufacturerbut not less than the following:

1. SSPC-SP 2, "Hand Tool Cleaning."
2. SSPC-SP 7/NACE No. 4, "Brush-off Blast Cleaning."
3. SSPC-SP 11, "Power Tool Cleaning to Bare Metal."

G. Shop-Primed Steel Substrates: Clean field welds, bolted connections, and abraded areas of shop paint, and paint exposed areas with the same material as used for shop priming to comply with SSPC-PA 1 for touching up shop-primed surfaces.

H. Galvanized-Metal Substrates: Remove grease and oil residue from galvanized sheet metal by mechanical methods to produce clean, lightly etched surfaces that promote adhesion of subsequently applied paints.

I. .

J. Wood Substrates:

1. Scrape and clean knots. Before applying primer, apply coat of knot sealer recommended in writing by topcoat manufacturer for exterior use in paint system indicated.
2. Sand surfaces that will be exposed to view, and dust off.
3. Prime edges, ends, faces, undersides, and backsides of wood.
4. After priming, fill holes and imperfections in the finish surfaces with putty or plastic wood filler. Sand smooth when dried.

K. Plastic Trim Fabrication Substrates: Remove dust, dirt, and other foreign material that might impair bond of paints to substrates.

## 3.3 APPLICATION

A. Apply paints according to manufacturer's written instructions and recommendations in "MPI Manual."

1. Use applicators and techniques suited for paint and substrate indicated.
2. Paint surfaces behind movable items same as similar exposed surfaces. Before final installation, paint surfaces behind permanently fixed items with prime coat only.
3. Paint both sides and edges of exterior doors and entire exposed surface of exterior door frames.
4. Do not paint over labels of independent testing agencies or equipment name, identification, performance rating, or nomenclature plates.
5. Primers specified in painting schedules may be omitted on items that are factory primed or factory finished if acceptable to topcoat manufacturers.

B. If undercoats or other conditions show through topcoat, apply additional coats until cured film has a uniform paint finish, color, and appearance.

C. Apply paints to produce surface films without cloudiness, spotting, holidays, laps, brush marks, roller tracking, runs, sags, ropiness, or other surface imperfections. Cut in sharp lines and color breaks.

D. Painting Fire Suppression, Plumbing, HVAC, Electrical, Communication, and Electronic Safety and Security Work:

1. Paint the following work where exposed to view:

a. Equipment, including panelboards
b. Uninsulated metal piping.
c. Uninsulated plastic piping.
d. Pipe hangers and supports.

e. Metal conduit.
f. Plastic conduit.

## 3.4 FIELD QUALITY CONTROL

A. Dry Film Thickness Testing: Owner may engage the services of a qualified testing and inspecting agency to inspect and test paint for dry film thickness.

1. Contractor shall touch up and restore painted surfaces damaged by testing.
2. If test results show that dry film thickness of applied paint does not comply with paint manufacturer's written recommendations, Contractor shall pay for testing and apply additional coats as needed to provide dry film thickness that complies with paint manufacturer's written recommendations.

## 3.5 CLEANING AND PROTECTION

A. At end of each workday, remove rubbish, empty cans, rags, and other discarded materials from Project site.

B. After completing paint application, clean spattered surfaces. Remove spattered paints by washing, scraping, or other methods. Do not scratch or damage adjacent finished surfaces.

C. Protect work of other trades against damage from paint application. Correct damage to work of other trades by cleaning, repairing, replacing, and refinishing, as approved by Architect, and leave in an undamaged condition.

D. At completion of construction activities of other trades, touch up and restore damaged or defaced painted surfaces.

## 3.6 EXTERIOR and INTERIOR PAINTING SCHEDULE

1. Concrete Substrates, Surfaces: DESIGNATION **"CP"**High-Build Epoxy System: Dry film thickness not less than 10 mils (0.25 mm).

   a. Prime Coat: As recommended in writing by topcoat manufacturer.
   b. Intermediate Coat: As recommended in writing by topcoat manufacturer.
   c. Topcoat: Epoxy Based, exterior, high build.

B. CMU Substrates: DESIGNATION **"WP"**

1. High-Build Epoxy System: Dry film thickness not less than 10 mils (0.25 mm).

   a. Prime Coat: As recommended in writing by topcoat manufacturer.
   b. Intermediate Coat: As recommended in writing by topcoat manufacturer.
   c. Topcoat: Epoxy Based, exterior, high build**,**

C. Steel Substrates: DESIGNATION **"MP"**

1. Alkyd System:

   a. Prime Coat: Primer, alkyd, anticorrosive for metal**, MPI #79**.
   b. Prime Coat: Shop primer where substrate is specified.
   c. Intermediate Coat: Exterior alkyd enamel matching topcoat.
   d. Topcoat: Alkyd, exterior, flat (Gloss Level 1)**, MPI #8**.

D. Galvanized-Metal Substrates: DESIGNATION **"MP" & "LIP"**

1. Latex System:

   a. Prime Coat: Primer, galvanized, water based**, MPI #134**.
   b. Intermediate Coat: Latex, exterior, matching topcoat.
   c. Topcoat: Latex, exterior flat (Gloss Level 1)**, MPI #10**.

2. Water-Based Light Industrial Coating System:

   a. Prime Coat: Primer, galvanized, water based**, MPI #134**.
   b. Intermediate Coat: Light industrial coating, exterior, water based, matching topcoat.
   c. Topcoat: Light industrial coating, exterior, water based (Gloss Level 3)**, MPI #161**.

3. Alkyd System:

   a. Prime Coat: Primer, galvanized metal**,** as recommended in writing by topcoat manufacturer for exterior use on galvanized-metal substrates with topcoat indicated.
   b. Intermediate Coat: Exterior alkyd enamel matching topcoat.
   c. Topcoat: Alkyd, exterior, flat (Gloss Level 5)**, MPI #8**.

E. Wood Substrates: Including **wood trim**, **architectural woodwork, wood-based panel products,exposed joists**,**exposed beams, purlins, soffits, bulkheads and miscellaneous items**.

DESIGNATION **"SP-2"**

1. Latex System:

   a. Prime Coat: Primer, latex for exterior wood**, MPI #6**.
   b. Intermediate Coat: Latex, exterior, matching topcoat.
   c. Topcoat: Latex, exterior flat (Gloss Level 1)**, MPI #10**.
   d. .

F. Exterior Gypsum Board Substrates:

1. Latex System: DESIGNATION **"SP-1"**

   a. Prime Coat: Latex, exterior, matching topcoat.
   b. Intermediate Coat: Latex, exterior, matching topcoat.

c. Topcoat: Latex, exterior flat (Gloss Level 1)[**, MPI #10**].

END OF SECTION 099113

# Tab 2 – Architectural Cut Sheets

# DUR-A-FLEX®

EPOXY
FLOORING
SYSTEMS

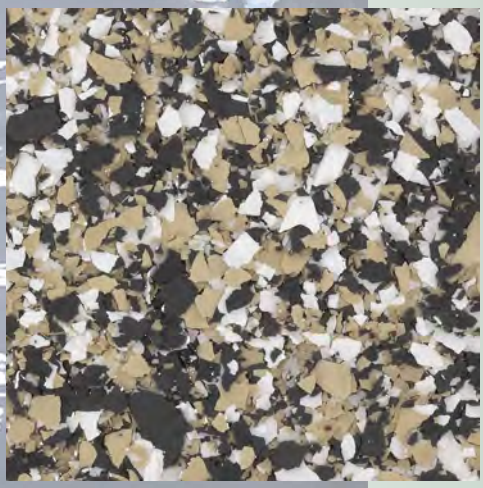

DUR-A-FLEX®
INNOVATION FROM THE FLOOR UP

Exceptional durability. Great looks. Outstanding value. The Dur-A-Flex® family of epoxy flooring systems offer the most protection for your money, providing superior resistance to chemical spills, heavy equipment and continuous traffic. Install a seamless, sanitary, easy to maintain surface that works as hard as you do, in any environment.

## FLOOR SYSTEMS

### Dur-A-Shield II

Consisting of a solvent-based epoxy prime coat and a finish coat, Dur-A-Shield creates a high strength surface that is high gloss, easy to clean and resistant to abrasion, oil, gasoline, acids and solvents.

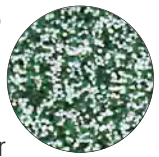

Q-28

### Dur-A-Quartz

Deluxe, multi-colored quartz aggregate fused with clear 100% solids epoxy provides resistance to solvents, acids and other chemicals. Available in two grades: Q28 (fine) and Q11 (coarse), this system is the top choice for decorative flooring applications. Certified by The National Floor Safety Institute (NFSI).

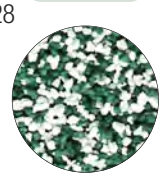

Q-11

### Dur-A-Gard and Dur-A-Gard SL

Dur-A-Gard forms a smooth, high gloss finish and is also available in an orange peel finish formulation. If standard slip resistant performance is required, Non-Skid Grit can be added during the application process. Dur-A-Gard SL contains special fillers, for self leveling applications where thicker systems from 35 -120 mils are desired.

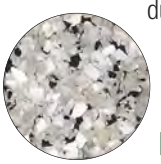

MICRO

### Dur-A-Chip

This decorative resurfacer fuses multi-color chips with 100% solids epoxy to provide a truly unique look. Chips are available in Macro and Micro sizes.

MACRO

### Shop Floor

Natural colored quartz aggregate and pigmented Dur-A-Glaze Shop Floor epoxy make this the affordable industrial resurfacer. A solid color opaque, monolithic surface hides imperfections and stands up to abuse. Available in standard and coarse textures.

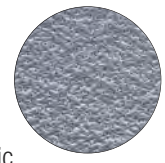

STANDARD

### Dur-A-Crete

This heavy duty, trowel applied resurfacer, incorporating epoxy resins and specially graded aggregates, is ideal for repair of badly spalled and eroded substrates.

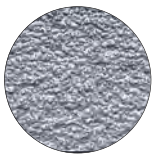

COARSE

### Mica-Flex E

A decorative floor system comprised of coats of 100% solids epoxy, natural mica flakes and a durable, UV resistant urethane topcoat. Mica flakes are available in macro and micro sizes.

### ReFLEXions
A decorative, poured in place flooring system combining Dur-A-Flex's durable and reliable resin systems with the latest in effects pigments to produce inspiring one-of-a-kind looks. Ask for a brochure to see pigment colors.

## FINISH TOPCOATS

### Dur-A-Glaze Novolac
This 100% solids, no VOC, epoxy coating is specified as a topcoat when the ability to withstand corrosion and high heat is a priority.

### Crete-Gard
Formulated especially for Dur-A-Crete trowel applied mortar systems, this super high viscosity hardener, saves time and material—enabling you to finish your floor with a single coating.

### Armor Top®
This three component aliphatic urethane protective coating was formulated for high traffic areas to protect against chemicals and wear. It is recommended as a final topcoat over all Dur-A-Flex epoxy floor systems.

### Dur-A-Glaze #5
Our no–odor, fast curing, UV resistant, clear topcoat; recommended for Dur-A-Quartz and Dur-A-Chip decorative floor systems or when an odor free topcoat is required.

## ESD FLOOR SYSTEMS

### Dur-A-Gard ESD
An epoxy-based ESD system offering low odor with a smooth finish. Good abrasion and chemical resistance in a two-component system.

### Armor-Stat ESD
An epoxy-urethane ESD system offering superior abrasion and chemical resistance makes it one of the longest-wearing ESD floor systems available in the industry. The three-step system offers our highest static protection from primer through urethane topcoat. Excellent UV resistance ensures consistent color throughout the life of the floor.

CA 01350
COMPLIANT

**The samples shown are only close approximations and should not be used for specification purposes. Contact Dur-A-Flex to obtain actual samples for best color selection.**

## Standard Colors

SAFETY RED | TILE RED | BEIGE | CHARCOAL | CARAMEL

BRIGHT YELLOW | IVORY | MEDIUM GREY | SLATE GREY | SMOKE BLUE

GREEN | LIGHT GREY | CONCRETE GREY | WHITE** | BLACK

**Not available in Shop Floor

## Mica-Flake

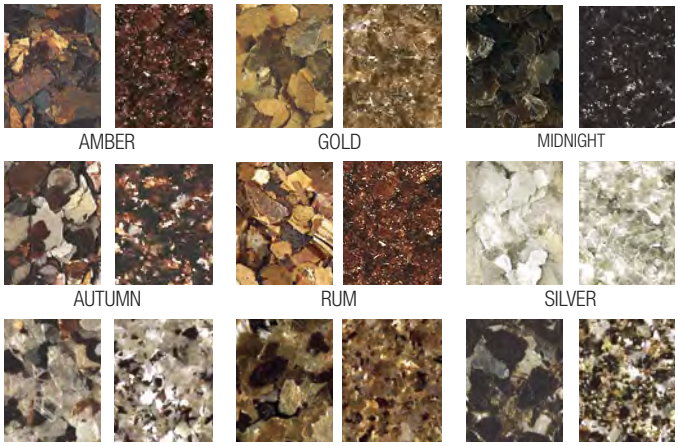

AMBER | GOLD | MIDNIGHT

AUTUMN | RUM | SILVER

NICKEL | GLIMMER | TORTOISE SHELL

All mica samples shown contain metallic flakes. Available in macro and micro sizes.

## Quartz Blends

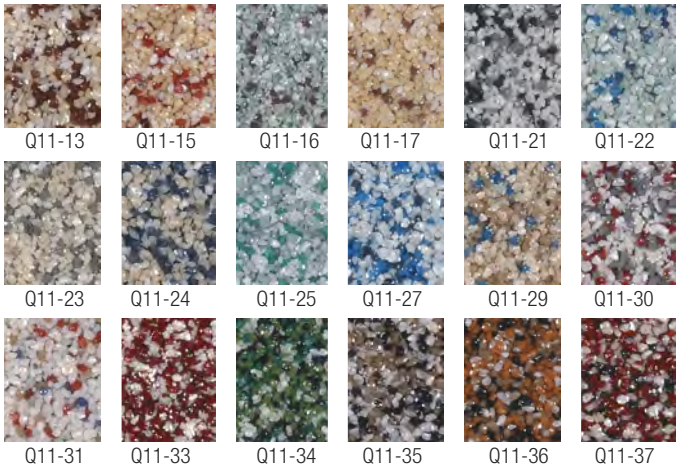

Q11-13 | Q11-15 | Q11-16 | Q11-17 | Q11-21 | Q11-22

Q11-23 | Q11-24 | Q11-25 | Q11-27 | Q11-29 | Q11-30

Q11-31 | Q11-33 | Q11-34 | Q11-35 | Q11-36 | Q11-37

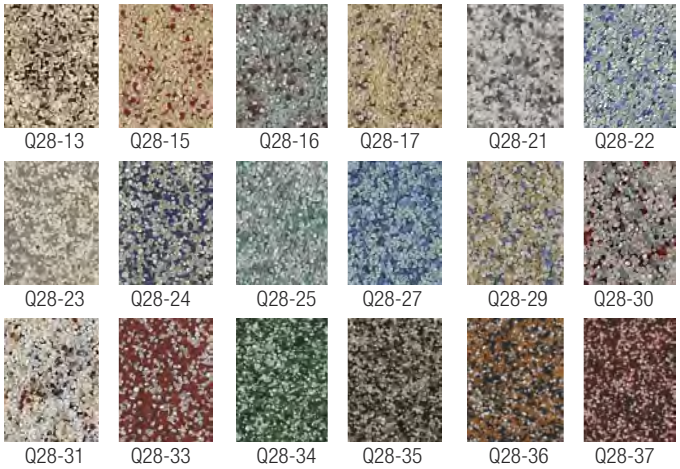

Q28-13 | Q28-15 | Q28-16 | Q28-17 | Q28-21 | Q28-22

Q28-23 | Q28-24 | Q28-25 | Q28-27 | Q28-29 | Q28-30

Q28-31 | Q28-33 | Q28-34 | Q28-35 | Q28-36 | Q28-37

## Macro Chip Blends

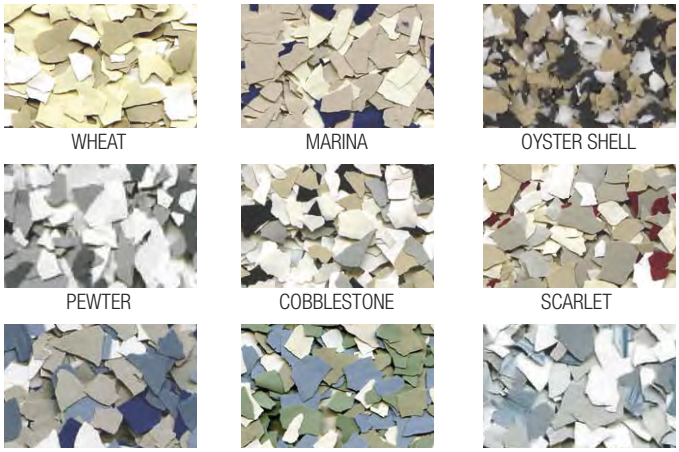

WHEAT | MARINA | OYSTER SHELL

PEWTER | COBBLESTONE | SCARLET

COBALT | CALYPSO | GLACIER

## Micro Chip Blends

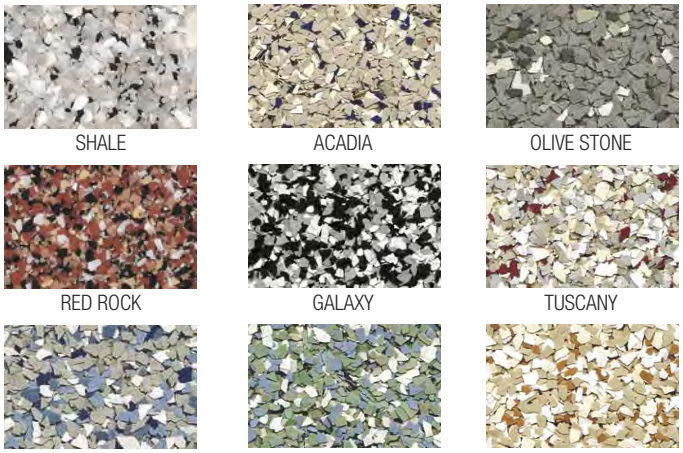

SHALE | ACADIA | OLIVE STONE

RED ROCK | GALAXY | TUSCANY

OCEAN | SEA GLASS | SAHARA

No one makes it easier to select, specify and install high performance flooring systems than Dur-A-Flex. Every step of the way, you'll experience superior customer service, professionalism and expertise as well as finely tuned processes—all the essentials which contribute to a solid business relationship.

5/13

DUR-A-FLEX®
INNOVATION FROM THE FLOOR UP

95 Goodwin Street, East Hartford, CT 06108
3969 East Guasti Road, Suite B, Ontario, CA 91761
Toll Free 800-253-3539 | 860-528-9838 | www.dur-a-flex.com

# Tab 3 – Lighting Fixture Cut Sheets

# DAYLED
## LED TROFFER 2X4

# quality performance, energy savings, an economical solution

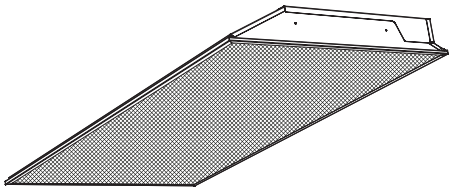

## PHILIPS DAY-BRITE DAYLED LED TROFFER 2X4

The Philips Day-Brite DayLED is an LED troffer offering general lighting distribution excellent for ambient illumination. It features a sealed, maintenance free, low profile housing, along with a frameless design that maximizes its luminous aperture and provides a clean, attractive ceiling appearance.

Project:

Location:

Catalog No:

Fixture Type:

Mfg: Qty:

Notes:

### Ordering guide

**example:** 1LTG34L840-4-21-UNV

| Width | Family | Ceiling Type | Lumen Package | Color | Length | Lens | Voltage | Options |
|---|---|---|---|---|---|---|---|---|
| **2** 2' | **LT** DayLED LED Troffer | **G** Grid | **40L** 4000 nominal delivered lumens<br>**47L** 4700 nominal delivered lumens<br>**56L** 5600 nominal delivered lumens<br>**71L** 7100 nominal delivered lumens | **840** 80 CRI, 4000K<br>**835** 80 CRI, 3500K | **4** 4' | **21** Pattern 12, .125" nominal<br>**12** DB-12, .156" nominal<br>**19** DB-19, .156" nominal<br>**184** Pattern 12, .125" nominal, diffuse<br>See sheet 420-SR for other options | **347**<br>**UNV** Universal voltage, 120-277 volt | **CM** Canadian Market<br>**DIM** 0-10V dimming driver<br>**SDIM** Step dimming driver<br>**F1** 3/8" flex, 3 wire 18 gauge<br>**GLR1** Fusing, fast blow |

### Accessories (order separately)

- **FMA24** – 2'x4' "F" mounting frame for NEMA "F" mounting



PHILIPS Day-Brite PHILIPS CFI

## Application

- High efficacy long life solid state lighting platform.
- General lighting distribution is excellent for ambient lighting.
- Lumen packages range from 4,000 to 7,100 lumens, providing flexibility to optimize light levels for a specific application.
- High CRI source provides excellent color rendering.
- LEDs are an excellent source for use with controls since frequent switching does not affect the life of the light source.
- Suitable for use in clean room application.

## Contruction/Finish

- Lower housing includes smooth edges for safe, easy handling.
- Housing is multi-stage phosphate treated for maximum corrosion resistance and finish coat is high reflectance baked white enamel.
- Sealed housing prevents the entry of dirt and bugs into the luminaire which eliminates the need for internal cleaning and reduces maintenance.
- T-bar clips are included.

## Electrical

- Driver and LED boards are accessible from above. LED boards are individually replaceable if required.
- ETL listed to UL standards, suitable for damp locations.
- Five-year luminaire warranty including LED boards and driver.
- High efficiency LEDs have 50,000 hour rated life (defined as 70% lumen maintenance.)
- Combinations are available providing up to 93 delivered lumens per Watt.
- Rated for clean room use – meets ISO14644-1 Class 5 (equivalent to Federal Standard No. 209E Class 100).
- Listed for used in insulated ceilings (Type IC).

## Enclosures

- Standard sealed configuration does not include a door frame since cleaning and relamping are not required.
- Frameless design maximizes luminous aperature and provides a clean appearance.
- A variety of lenses are available to tailor the luminaire to the application.
- Contact factory for applications requiring a door frame.

## Dimensions

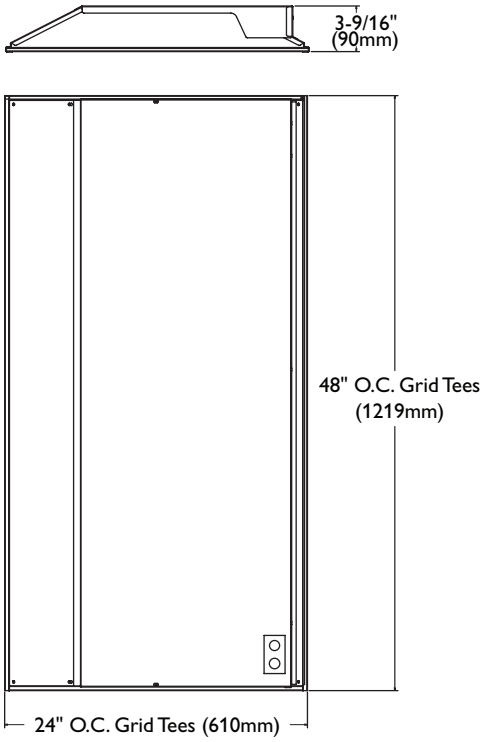


## Energy data

| Model | Initial Delivered Lumens at 25˚C Ambient* | Input Power | Lumens Per Watt* |
|---|---|---|---|
| 2LTG40L840-4-21 | 4,034 | 45W | 90LPW |
| 2LTG40L840-4-184 | 3,896 | 45W | 87LPW |
| 2LTG47L840-4-21 | 4,658 | 53W | 88LPW |
| 2LTG47L840-4-184 | 4,521 | 53W | 85LPW |
| 2LTG56L840-4-21 | 5,598 | 60W | 93LPW |
| 2LTG56L840-4-184 | 5,492 | 60W | 92LPW |
| 2LTG71L840-4-21 | 7,067 | 78W | 91LPW |
| 2LTG71L840-4-184 | 6,935 | 78W | 89LPW |

*3500K models are approx. 7% lower.

## DayLED LED Troffer 2x4, 4000 nominal delivered lumens, standard lens — LER – 90

| | |
|---|---|
| Catalog No. | 2LTG40L840-4-21 |
| Test No. | 29847 |
| S/MH | 1.2 |
| Source | 45WLED |
| Lumens/Lamp | 4034 |
| Input Watts | 45 |

Comparative yearly lighting energy cost per 1000 lumens – **$2.67** based on 3000 hrs. and $.08 pwr KWH.

The photometric results were obtained in the Philips Day-Brite laboratory which is NVLAP accredited by the National Institute of Standards and Technology.

Photometric values based on test performed in compliance with LM-79.

### Candlepower

| Angle | End | 45 | Cross |
|---|---|---|---|
| 0 | 1710 | 1710 | 1710 |
| 5 | 1716 | 1706 | 1685 |
| 10 | 1694 | 1681 | 1667 |
| 15 | 1660 | 1645 | 1631 |
| 20 | 1600 | 1593 | 1581 |
| 25 | 1522 | 1520 | 1515 |
| 30 | 1420 | 1422 | 1428 |
| 35 | 1291 | 1298 | 1310 |
| 40 | 1141 | 1153 | 1166 |
| 45 | 975 | 980 | 991 |
| 50 | 798 | 793 | 798 |
| 55 | 628 | 612 | 615 |
| 60 | 473 | 447 | 450 |
| 65 | 342 | 305 | 324 |
| 70 | 262 | 211 | 234 |
| 75 | 206 | 158 | 176 |
| 80 | 150 | 123 | 130 |
| 85 | 81 | 71 | 74 |

### Light Distribution

| Degrees | Lumens | % Luminaire |
|---|---|---|
| 0-30 | 1324 | 32.8 |
| 0-40 | 2134 | 52.9 |
| 0-60 | 3441 | 85.3 |
| 0-90 | 4034 | 100.0 |

### Average Luminance

| Angle | End | 45° | Cross |
|---|---|---|---|
| 45 | 2112 | 2123 | 2147 |
| 55 | 1677 | 1634 | 1642 |
| 65 | 1239 | 1105 | 1174 |
| 75 | 1219 | 935 | 1042 |
| 85 | 1423 | 1248 | 1300 |

### Coefficients of Utilization

**EFFECTIVE FLOOR CAVITY REFLECTANCE 20 PER (pfc=0.20)**

| pcc | 80 | | | 70 | | | 50 | |
|---|---|---|---|---|---|---|---|---|
| pw | 70 | 50 | 30 | 70 | 50 | 30 | 50 | 30 |
| RCR | | | | | | | | |
| 0 | 118 | 118 | 118 | 115 | 115 | 115 | 111 | 111 |
| 1 | 110 | 105 | 101 | 107 | 103 | 98 | 98 | 95 |
| 2 | 101 | 93 | 86 | 97 | 91 | 84 | 88 | 82 |
| 3 | 93 | 82 | 75 | 90 | 81 | 73 | 78 | 71 |
| 4 | 84 | 73 | 66 | 82 | 72 | 65 | 69 | 64 |
| 5 | 79 | 67 | 57 | 77 | 66 | 57 | 64 | 56 |
| 6 | 72 | 59 | 52 | 70 | 59 | 52 | 57 | 51 |
| 7 | 68 | 55 | 46 | 66 | 54 | 46 | 53 | 46 |
| 8 | 63 | 50 | 41 | 61 | 50 | 41 | 47 | 40 |
| 9 | 58 | 46 | 39 | 57 | 46 | 38 | 45 | 38 |
| 10 | 56 | 42 | 34 | 54 | 41 | 34 | 40 | 34 |

## DayLED LED Troffer 2x4, 4000 nominal delivered lumens, diffuse lens — LER – 87

| | |
|---|---|
| Catalog No. | 2LTG40L840-4-184 |
| Test No. | 29717 |
| S/MH | 1.2 |
| Source | 45WLED |
| Lumens/Lamp | 3896 |
| Input Watts | 45 |

Comparative yearly lighting energy cost per 1000 lumens – **$2.76** based on 3000 hrs. and $.08 pwr KWH.

The photometric results were obtained in the Philips Day-Brite laboratory which is NVLAP accredited by the National Institute of Standards and Technology.

Photometric values based on test performed in compliance with LM-79.

### Candlepower

| Angle | End | 45 | Cross |
|---|---|---|---|
| 0 | 1644 | 1644 | 1644 |
| 5 | 1641 | 1633 | 1631 |
| 10 | 1612 | 1606 | 1602 |
| 15 | 1565 | 1563 | 1557 |
| 20 | 1501 | 1497 | 1494 |
| 25 | 1413 | 1416 | 1415 |
| 30 | 1307 | 1309 | 1311 |
| 35 | 1182 | 1186 | 1188 |
| 40 | 1046 | 1047 | 1052 |
| 45 | 900 | 897 | 906 |
| 50 | 757 | 749 | 758 |
| 55 | 618 | 607 | 615 |
| 60 | 492 | 478 | 485 |
| 65 | 384 | 362 | 369 |
| 70 | 292 | 272 | 278 |
| 75 | 220 | 197 | 203 |
| 80 | 153 | 136 | 139 |
| 85 | 80 | 71 | 75 |

### Light Distribution

| Degrees | Lumens | % Luminaire |
|---|---|---|
| 0-30 | 1244 | 32.0 |
| 0-40 | 1984 | 50.9 |
| 0-60 | 3224 | 82.8 |
| 0-90 | 3894 | 100.0 |

### Average Luminance

| Angle | End | 45° | Cross |
|---|---|---|---|
| 45 | 1949 | 1943 | 1962 |
| 55 | 1650 | 1621 | 1642 |
| 65 | 1392 | 1312 | 1337 |
| 75 | 1302 | 1166 | 1201 |
| 85 | 1406 | 1248 | 1318 |

### Coefficients of Utilization

**EFFECTIVE FLOOR CAVITY REFLECTANCE 20 PER (pfc=0.20)**

| pcc | 80 | | | 70 | | | 50 | |
|---|---|---|---|---|---|---|---|---|
| pw | 70 | 50 | 30 | 70 | 50 | 30 | 50 | 30 |
| RCR | | | | | | | | |
| 0 | 118 | 118 | 118 | 115 | 115 | 115 | 111 | 111 |
| 1 | 109 | 105 | 101 | 107 | 102 | 98 | 97 | 94 |
| 2 | 100 | 92 | 85 | 96 | 90 | 83 | 86 | 81 |
| 3 | 92 | 81 | 73 | 89 | 80 | 72 | 77 | 70 |
| 4 | 83 | 72 | 65 | 81 | 71 | 64 | 68 | 61 |
| 5 | 78 | 66 | 56 | 76 | 65 | 56 | 61 | 55 |
| 6 | 71 | 58 | 51 | 69 | 57 | 50 | 56 | 48 |
| 7 | 67 | 54 | 46 | 65 | 53 | 45 | 52 | 45 |
| 8 | 63 | 50 | 40 | 60 | 48 | 40 | 47 | 40 |
| 9 | 58 | 46 | 38 | 56 | 45 | 36 | 44 | 36 |
| 10 | 55 | 41 | 34 | 54 | 41 | 34 | 40 | 34 |

## DayLED LED Troffer 2x4, 4700 nominal delivered lumens, standard lens — LER – 88

| | |
|---|---|
| Catalog No. | 2LTG47L840-4-21 |
| Test No. | 29854 |
| S/MH | 1.2 |
| Source | 53WLED |
| Lumens/Lamp | 4658 |
| Input Watts | 53 |

Comparative yearly lighting energy cost per 1000 lumens – **$2.73** based on 3000 hrs. and $.08 pwr KWH.

The photometric results were obtained in the Philips Day-Brite laboratory which is NVLAP accredited by the National Institute of Standards and Technology.

Photometric values based on test performed in compliance with LM-79.

### Candlepower

| Angle | End | 45 | Cross |
|---|---|---|---|
| 0 | 1973 | 1973 | 1973 |
| 5 | 1978 | 1970 | 1944 |
| 10 | 1956 | 1939 | 1921 |
| 15 | 1915 | 1898 | 1880 |
| 20 | 1851 | 1839 | 1823 |
| 25 | 1757 | 1751 | 1745 |
| 30 | 1641 | 1641 | 1647 |
| 35 | 1488 | 1497 | 1511 |
| 40 | 1318 | 1331 | 1346 |
| 45 | 1124 | 1131 | 1138 |
| 50 | 921 | 913 | 917 |
| 55 | 725 | 707 | 710 |
| 60 | 546 | 520 | 524 |
| 65 | 399 | 354 | 372 |
| 70 | 303 | 242 | 269 |
| 75 | 238 | 181 | 203 |
| 80 | 173 | 142 | 152 |
| 85 | 95 | 82 | 87 |

### Light Distribution

| Degrees | Lumens | % Luminaire |
|---|---|---|
| 0-30 | 1528 | 32.8 |
| 0-40 | 2463 | 52.9 |
| 0-60 | 3973 | 85.3 |
| 0-90 | 4659 | 100.0 |

### Average Luminance

| Angle | End | 45° | Cross |
|---|---|---|---|
| 45 | 2435 | 2450 | 2465 |
| 55 | 1936 | 1888 | 1896 |
| 65 | 1446 | 1283 | 1348 |
| 75 | 1408 | 1071 | 1201 |
| 85 | 1669 | 1441 | 1529 |

### Coefficients of Utilization

**EFFECTIVE FLOOR CAVITY REFLECTANCE 20 PER (pfc=0.20)**

| pcc | 80 | | | 70 | | | 50 | |
|---|---|---|---|---|---|---|---|---|
| pw | 70 | 50 | 30 | 70 | 50 | 30 | 50 | 30 |
| RCR | | | | | | | | |
| 0 | 118 | 118 | 118 | 115 | 115 | 115 | 111 | 111 |
| 1 | 110 | 105 | 101 | 107 | 103 | 98 | 98 | 95 |
| 2 | 101 | 93 | 86 | 97 | 91 | 84 | 88 | 82 |
| 3 | 93 | 82 | 75 | 90 | 81 | 73 | 78 | 71 |
| 4 | 84 | 73 | 66 | 82 | 72 | 65 | 69 | 64 |
| 5 | 79 | 67 | 57 | 77 | 66 | 57 | 64 | 56 |
| 6 | 72 | 59 | 52 | 70 | 58 | 52 | 57 | 51 |
| 7 | 68 | 55 | 46 | 66 | 54 | 46 | 53 | 46 |
| 8 | 63 | 50 | 41 | 61 | 50 | 41 | 47 | 40 |
| 9 | 58 | 46 | 39 | 57 | 46 | 38 | 45 | 38 |
| 10 | 56 | 42 | 34 | 54 | 41 | 34 | 40 | 34 |

## DayLED LED Troffer 2x4, 4700 nominal delivered lumens, diffuse lens — LER – 85

| | |
|---|---|
| Catalog No. | 2LTG47L840-4-184 |
| Test No. | 29708 |
| S/MH | 1.2 |
| Source | 53WLED |
| Lumens/Lamp | 4521 |
| Input Watts | 53 |

Comparative yearly lighting energy cost per 1000 lumens – **$2.82** based on 3000 hrs. and $.08 pwr KWH.

The photometric results were obtained in the Philips Day-Brite laboratory which is NVLAP accredited by the National Institute of Standards and Technology.

Photometric values based on test performed in compliance with LM-79.

### Candlepower

| Angle | End | 45 | Cross |
|---|---|---|---|
| 0 | 1902 | 1902 | 1902 |
| 5 | 1892 | 1896 | 1883 |
| 10 | 1859 | 1867 | 1851 |
| 15 | 1805 | 1813 | 1796 |
| 20 | 1727 | 1741 | 1727 |
| 25 | 1632 | 1642 | 1635 |
| 30 | 1506 | 1521 | 1511 |
| 35 | 1364 | 1376 | 1369 |
| 40 | 1206 | 1216 | 1213 |
| 45 | 1042 | 1048 | 1048 |
| 50 | 876 | 873 | 874 |
| 55 | 718 | 708 | 710 |
| 60 | 569 | 558 | 560 |
| 65 | 447 | 424 | 428 |
| 70 | 341 | 318 | 321 |
| 75 | 257 | 231 | 236 |
| 80 | 176 | 158 | 161 |
| 85 | 95 | 84 | 88 |

### Light Distribution

| Degrees | Lumens | % Luminaire |
|---|---|---|
| 0-30 | 1441 | 31.9 |
| 0-40 | 2298 | 50.8 |
| 0-60 | 3738 | 82.7 |
| 0-90 | 4519 | 100.0 |

### Average Luminance

| Angle | End | 45° | Cross |
|---|---|---|---|
| 45 | 2257 | 2270 | 2270 |
| 55 | 1917 | 1891 | 1896 |
| 65 | 1620 | 1537 | 1551 |
| 75 | 1521 | 1367 | 1397 |
| 85 | 1669 | 1476 | 1546 |

### Coefficients of Utilization

**EFFECTIVE FLOOR CAVITY REFLECTANCE 20 PER (pfc=0.20)**

| pcc | 80 | | | 70 | | | 50 | |
|---|---|---|---|---|---|---|---|---|
| pw | 70 | 50 | 30 | 70 | 50 | 30 | 50 | 30 |
| RCR | | | | | | | | |
| 0 | 118 | 118 | 118 | 115 | 115 | 115 | 111 | 111 |
| 1 | 109 | 105 | 101 | 107 | 102 | 98 | 97 | 94 |
| 2 | 100 | 92 | 85 | 96 | 90 | 83 | 86 | 81 |
| 3 | 92 | 81 | 73 | 89 | 80 | 72 | 77 | 70 |
| 4 | 83 | 72 | 65 | 81 | 71 | 64 | 68 | 61 |
| 5 | 78 | 66 | 56 | 76 | 64 | 56 | 61 | 55 |
| 6 | 71 | 58 | 51 | 69 | 57 | 50 | 56 | 48 |
| 7 | 67 | 54 | 46 | 65 | 53 | 45 | 52 | 45 |
| 8 | 63 | 50 | 40 | 60 | 48 | 40 | 47 | 40 |
| 9 | 58 | 46 | 38 | 56 | 45 | 36 | 44 | 36 |
| 10 | 55 | 41 | 34 | 54 | 41 | 34 | 40 | 34 |

## DayLED LED Troffer 2x4, 5600 nominal delivered lumens, standard lens — LER – 93

| | |
|---|---|
| Catalog No. | 2LTG56L840-4-21 |
| Test No. | 29832 |
| S/MH | 1.2 |
| Source | 60WLED |
| Lumens/Lamp | 5598 |
| Input Watts | 60 |

Comparative yearly lighting energy cost per 1000 lumens – **$2.58** based on 3000 hrs. and $.08 pwr KWH.

The photometric results were obtained in the Philips Day-Brite laboratory which is NVLAP accredited by the National Institute of Standards and Technology.

Photometric values based on test performed in compliance with LM-79.

### Candlepower

| Angle | End | 45 | Cross |
|---|---|---|---|
| 0 | 2365 | 2365 | 2365 |
| 5 | 2365 | 2357 | 2341 |
| 10 | 2338 | 2329 | 2313 |
| 15 | 2285 | 2275 | 2263 |
| 20 | 2209 | 2201 | 2193 |
| 25 | 2098 | 2103 | 2099 |
| 30 | 1959 | 1968 | 1976 |
| 35 | 1781 | 1797 | 1816 |
| 40 | 1572 | 1597 | 1615 |
| 45 | 1343 | 1363 | 1378 |
| 50 | 1100 | 1102 | 1111 |
| 55 | 870 | 851 | 861 |
| 60 | 653 | 620 | 637 |
| 65 | 482 | 427 | 461 |
| 70 | 370 | 290 | 323 |
| 75 | 288 | 221 | 245 |
| 80 | 207 | 172 | 185 |
| 85 | 109 | 100 | 104 |

### Light Distribution

| Degrees | Lumens | % Luminaire |
|---|---|---|
| 0-30 | 1831 | 32.7 |
| 0-40 | 2952 | 52.7 |
| 0-60 | 4769 | 85.2 |
| 0-90 | 5598 | 100.0 |

### Average Luminance

| Angle | End | 45° | Cross |
|---|---|---|---|
| 45 | 2909 | 2952 | 2985 |
| 55 | 2323 | 2272 | 2299 |
| 65 | 1747 | 1548 | 1671 |
| 75 | 1704 | 1308 | 1450 |
| 85 | 1916 | 1757 | 1828 |

### Coefficients of Utilization

**EFFECTIVE FLOOR CAVITY REFLECTANCE 20 PER (pfc=0.20)**

| pcc | 80 | | | 70 | | | 50 | |
|---|---|---|---|---|---|---|---|---|
| pw | 70 | 50 | 30 | 70 | 50 | 30 | 50 | 30 |
| RCR | | | | | | | | |
| 0 | 118 | 118 | 118 | 115 | 115 | 115 | 111 | 111 |
| 1 | 110 | 105 | 101 | 107 | 103 | 98 | 98 | 95 |
| 2 | 101 | 93 | 86 | 97 | 91 | 84 | 88 | 82 |
| 3 | 92 | 82 | 75 | 90 | 81 | 73 | 78 | 71 |
| 4 | 84 | 73 | 66 | 82 | 72 | 65 | 69 | 64 |
| 5 | 79 | 67 | 57 | 77 | 66 | 57 | 63 | 56 |
| 6 | 72 | 59 | 52 | 70 | 58 | 51 | 57 | 51 |
| 7 | 68 | 55 | 46 | 66 | 54 | 46 | 53 | 46 |
| 8 | 63 | 50 | 41 | 61 | 50 | 41 | 47 | 40 |
| 9 | 58 | 46 | 39 | 57 | 46 | 38 | 45 | 38 |
| 10 | 56 | 42 | 34 | 54 | 41 | 34 | 40 | 34 |

## DayLED LED Troffer 2x4, 5600 nominal delivered lumens, diffuse lens — LER – 92

| | |
|---|---|
| Catalog No. | 2LTG56L840-4-184 |
| Test No. | 29730 |
| S/MH | 1.2 |
| Source | 60WLED |
| Lumens/Lamp | 5492 |
| Input Watts | 60 |

Comparative yearly lighting energy cost per 1000 lumens – **$2.61** based on 3000 hrs. and $.08 pwr KWH.

The photometric results were obtained in the Philips Day-Brite laboratory which is NVLAP accredited by the National Institute of Standards and Technology.

Photometric values based on test performed in compliance with LM-79.

### Candlepower

| Angle | End | 45 | Cross |
|---|---|---|---|
| 0 | 2321 | 2321 | 2321 |
| 5 | 2316 | 2312 | 2297 |
| 10 | 2275 | 2271 | 2258 |
| 15 | 2211 | 2205 | 2195 |
| 20 | 2117 | 2115 | 2109 |
| 25 | 1997 | 1999 | 1996 |
| 30 | 1843 | 1850 | 1850 |
| 35 | 1671 | 1668 | 1675 |
| 40 | 1475 | 1476 | 1486 |
| 45 | 1267 | 1266 | 1271 |
| 50 | 1067 | 1054 | 1062 |
| 55 | 874 | 854 | 863 |
| 60 | 693 | 674 | 675 |
| 65 | 539 | 509 | 517 |
| 70 | 413 | 381 | 390 |
| 75 | 309 | 279 | 285 |
| 80 | 213 | 189 | 195 |
| 85 | 111 | 101 | 106 |

### Light Distribution

| Degrees | Lumens | % Luminaire |
|---|---|---|
| 0-30 | 1758 | 32.0 |
| 0-40 | 2801 | 51.0 |
| 0-60 | 4548 | 82.8 |
| 0-90 | 5490 | 100.0 |

### Average Luminance

| Angle | End | 45° | Cross |
|---|---|---|---|
| 45 | 2744 | 2742 | 2753 |
| 55 | 2334 | 2280 | 2304 |
| 65 | 1953 | 1845 | 1874 |
| 75 | 1829 | 1651 | 1687 |
| 85 | 1951 | 1775 | 1863 |

### Coefficients of Utilization

**EFFECTIVE FLOOR CAVITY REFLECTANCE 20 PER (pfc=0.20)**

| pcc | 80 | | | 70 | | | 50 | |
|---|---|---|---|---|---|---|---|---|
| pw | 70 | 50 | 30 | 70 | 50 | 30 | 50 | 30 |
| RCR | | | | | | | | |
| 0 | 118 | 118 | 118 | 115 | 115 | 115 | 111 | 111 |
| 1 | 109 | 105 | 101 | 107 | 102 | 98 | 97 | 94 |
| 2 | 100 | 92 | 85 | 96 | 90 | 83 | 86 | 81 |
| 3 | 92 | 81 | 73 | 89 | 80 | 72 | 77 | 70 |
| 4 | 83 | 72 | 65 | 81 | 71 | 64 | 68 | 61 |
| 5 | 78 | 66 | 56 | 76 | 65 | 56 | 61 | 55 |
| 6 | 71 | 58 | 51 | 69 | 58 | 50 | 56 | 50 |
| 7 | 67 | 54 | 46 | 66 | 53 | 45 | 52 | 45 |
| 8 | 63 | 50 | 40 | 60 | 48 | 40 | 47 | 40 |
| 9 | 58 | 46 | 38 | 56 | 45 | 36 | 44 | 36 |
| 10 | 55 | 41 | 34 | 54 | 41 | 34 | 40 | 34 |

## DayLED LED Troffer 2x4, 7100 nominal delivered lumens, standard lens — LER – 91

| | |
|---|---|
| Catalog No. | 2LTG71L840-4-21 |
| Test No. | 29838 |
| S/MH | 1.2 |
| Source | 76WLED |
| Lumens/Lamp | 7067 |
| Input Watts | 78 |

Comparative yearly lighting energy cost per 1000 lumens – **$2.64** based on 3000 hrs. and $.08 pwr KWH.

The photometric results were obtained in the Philips Day-Brite laboratory which is NVLAP accredited by the National Institute of Standards and Technology.

Photometric values based on test performed in compliance with LM-79.

### Candlepower

| Angle | End | 45 | Cross |
|---|---|---|---|
| 0 | 2977 | 2977 | 2977 |
| 5 | 2981 | 2970 | 2948 |
| 10 | 2942 | 2931 | 2911 |
| 15 | 2882 | 2871 | 2849 |
| 20 | 2784 | 2774 | 2757 |
| 25 | 2651 | 2651 | 2643 |
| 30 | 2475 | 2481 | 2489 |
| 35 | 2246 | 2272 | 2287 |
| 40 | 1993 | 2022 | 2040 |
| 45 | 1696 | 1714 | 1742 |
| 50 | 1385 | 1390 | 1403 |
| 55 | 1092 | 1076 | 1090 |
| 60 | 827 | 791 | 807 |
| 65 | 602 | 541 | 577 |
| 70 | 460 | 372 | 415 |
| 75 | 363 | 278 | 310 |
| 80 | 261 | 216 | 232 |
| 85 | 138 | 125 | 135 |

### Light Distribution

| Degrees | Lumens | % Luminaire |
|---|---|---|
| 0-30 | 2309 | 32.7 |
| 0-40 | 3723 | 52.7 |
| 0-60 | 6018 | 85.1 |
| 0-90 | 7069 | 100.0 |

### Average Luminance

| Angle | End | 45° | Cross |
|---|---|---|---|
| 45 | 3674 | 3713 | 3773 |
| 55 | 2916 | 2873 | 2911 |
| 65 | 2182 | 1961 | 2091 |
| 75 | 2148 | 1645 | 1834 |
| 85 | 2425 | 2197 | 2372 |

### Coefficients of Utilization

**EFFECTIVE FLOOR CAVITY REFLECTANCE 20 PER (pfc=0.20)**

| pcc | 80 | | | 70 | | | 50 | |
|---|---|---|---|---|---|---|---|---|
| pw | 70 | 50 | 30 | 70 | 50 | 30 | 50 | 30 |
| RCR | | | | | | | | |
| 0 | 118 | 118 | 118 | 115 | 115 | 115 | 111 | 111 |
| 1 | 110 | 105 | 101 | 107 | 103 | 98 | 98 | 95 |
| 2 | 101 | 93 | 86 | 97 | 91 | 84 | 88 | 82 |
| 3 | 92 | 82 | 75 | 90 | 81 | 73 | 78 | 71 |
| 4 | 84 | 73 | 66 | 82 | 72 | 65 | 69 | 64 |
| 5 | 79 | 67 | 57 | 77 | 65 | 57 | 63 | 56 |
| 6 | 72 | 59 | 52 | 70 | 58 | 51 | 57 | 51 |
| 7 | 68 | 55 | 46 | 66 | 54 | 46 | 53 | 46 |
| 8 | 63 | 50 | 41 | 61 | 50 | 41 | 47 | 40 |
| 9 | 58 | 46 | 38 | 57 | 46 | 38 | 45 | 38 |
| 10 | 56 | 42 | 34 | 54 | 41 | 34 | 40 | 34 |

## DayLED LED Troffer 2x4, 7100 nominal delivered lumens, diffuse lens — LER – 89

| | |
|---|---|
| Catalog No. | 2LTG71L840-4-184 |
| Test No. | 29724 |
| S/MH | 1.2 |
| Source | 76WLED |
| Lumens/Lamp | 6935 |
| Input Watts | 78 |

Comparative yearly lighting energy cost per 1000 lumens – **$2.70** based on 3000 hrs. and $.08 pwr KWH.

The photometric results were obtained in the Philips Day-Brite laboratory which is NVLAP accredited by the National Institute of Standards and Technology.

Photometric values based on test performed in compliance with LM-79.

### Candlepower

| Angle | End | 45 | Cross |
|---|---|---|---|
| 0 | 2925 | 2925 | 2925 |
| 5 | 2919 | 2913 | 2897 |
| 10 | 2869 | 2863 | 2850 |
| 15 | 2791 | 2781 | 2770 |
| 20 | 2671 | 2671 | 2660 |
| 25 | 2517 | 2517 | 2515 |
| 30 | 2326 | 2334 | 2332 |
| 35 | 2110 | 2112 | 2118 |
| 40 | 1859 | 1867 | 1879 |
| 45 | 1603 | 1604 | 1614 |
| 50 | 1349 | 1332 | 1338 |
| 55 | 1098 | 1081 | 1092 |
| 60 | 876 | 844 | 852 |
| 65 | 681 | 648 | 653 |
| 70 | 522 | 481 | 490 |
| 75 | 393 | 352 | 356 |
| 80 | 270 | 238 | 245 |
| 85 | 141 | 129 | 136 |

### Light Distribution

| Degrees | Lumens | % Luminaire |
|---|---|---|
| 0-30 | 2217 | 32.0 |
| 0-40 | 3534 | 51.0 |
| 0-60 | 5742 | 82.8 |
| 0-90 | 6932 | 100.0 |

### Average Luminance

| Angle | End | 45° | Cross |
|---|---|---|---|
| 45 | 3472 | 3474 | 3496 |
| 55 | 2932 | 2887 | 2916 |
| 65 | 2468 | 2348 | 2367 |
| 75 | 2326 | 2083 | 2107 |
| 85 | 2478 | 2267 | 2390 |

### Coefficients of Utilization

**EFFECTIVE FLOOR CAVITY REFLECTANCE 20 PER (pfc=0.20)**

| pcc | 80 | | | 70 | | | 50 | |
|---|---|---|---|---|---|---|---|---|
| pw | 70 | 50 | 30 | 70 | 50 | 30 | 50 | 30 |
| RCR | | | | | | | | |
| 0 | 118 | 118 | 118 | 115 | 115 | 115 | 111 | 111 |
| 1 | 109 | 105 | 101 | 107 | 102 | 98 | 97 | 94 |
| 2 | 100 | 92 | 85 | 96 | 90 | 83 | 86 | 81 |
| 3 | 92 | 81 | 73 | 89 | 80 | 72 | 77 | 70 |
| 4 | 83 | 72 | 65 | 81 | 71 | 64 | 68 | 61 |
| 5 | 78 | 66 | 56 | 76 | 65 | 56 | 61 | 55 |
| 6 | 71 | 58 | 51 | 69 | 57 | 50 | 56 | 48 |
| 7 | 67 | 54 | 46 | 65 | 53 | 45 | 52 | 45 |
| 8 | 63 | 50 | 40 | 60 | 48 | 40 | 47 | 40 |
| 9 | 58 | 46 | 38 | 56 | 45 | 36 | 44 | 36 |
| 10 | 55 | 41 | 34 | 54 | 41 | 34 | 40 | 34 |

© 2014 Koninklijke Philips N.V. All rights reserved.
Specifications are subject to change without notice.
www.philips.com/luminaires



Philips Lighting
North America Corporation
200 Franklin Square Drive
Somerset, NJ 08873
Tel. 855-486-2216

Imported by: Philips Lighting,
A division of Philips Electronics Ltd.
281 Hillmount Rd,
Markham, ON Canada L6C 2S3
Tel. 800-668-9008

# Tab 4 – Mechanical Cut Sheets

COOK

| MARK: EF-6 |
|---|
| PROJECT: COOK FANS |
| DATE: 10/20/2014 |

# SQN-B

## Centrifugal Square Inline
## Belt Drive

**STANDARD CONSTRUCTION FEATURES:**
**All aluminum wheel - Galvanized steel housing - Three removable access doors - Closed cell neoprene gasketing - Inlet and discharge duct collars - Universal mounting feet - Regreasable bearings in a cast housing rated at 200,000 hours average life - Permanently lubricated ball bearing motor - Adjustable pitch drives through 5 HP - All fans factory adjusted to specified fan RPM - Transit tested packaging.**

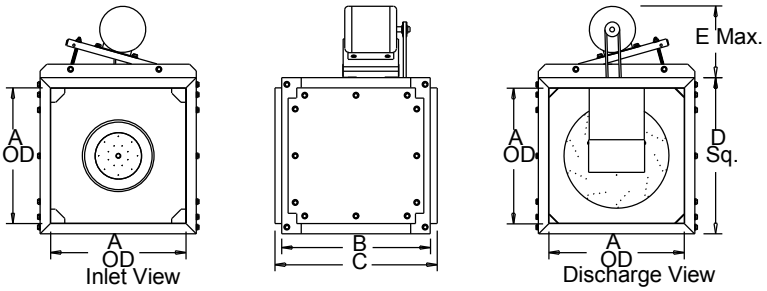


**Performance** (*Bhp includes 9% drive loss)

| Qty | Catalog Number | Flow (CFM) | SP (inwc) | Fan RPM | Power* (HP) | FEG |
|---|---|---|---|---|---|---|
| 1 | 135SQN-B | 1800 | 1.60 | 1958 | 1.03 | 56 |

Altitude (ft): 300 Temperature (F): 120

**Motor Information**

| HP | RPM | Volts/Ph/Hz | Enclosure | Mounted |
|---|---|---|---|---|
| 1-1/2 | 1725 | 208/3/60 | TEFC -PE | Yes |

**Sound Data Inlet Sound Power by Octave Band**

| 1 | 2 | 3 | 4 | 5 | 6 | 7 | 8 | LwA | dBA | Sones |
|---|---|---|---|---|---|---|---|---|---|---|
| 83 | 87 | 85 | 83 | 79 | 74 | 71 | 65 | 84 | 73 | 21 |

**Accessories:**
Premium Efficiency Motor (Min. 86.5%)
SHAFT GROUNDING RING
STD DISCONNECT PREWIRED
BDM-18 24V
BELT GUARD
FLANGED INLET
FLANGED OUTLET
INLET FLEX DUCT CONN
OUTLET FLEX DUCT CON
EXTENDED LUBE LINES
SC-125 SET(4) - ISOLATORS

**Dimensions** (inches)

| | |
|---|---|
| A | 18 |
| B | 20-1/4 |
| C | 22-1/4 |
| D | 20-3/4 |
| E | 12-1/2 |

NOTE: Accessories may affect dimensions shown.

| Shipping Weight(lbs)*** | 224 |
|---|---|

***Includes fan, motor & accessories.

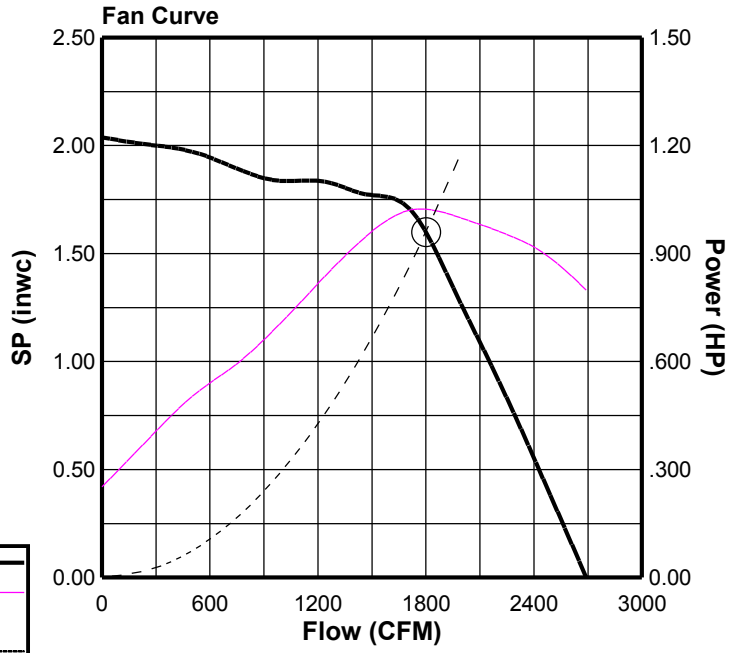


**Fan Curve Legend**

| | |
|---|---|
| CFM vs SP | ——— |
| CFM vs HP | ——— |
| Point of Operation | ○ |
| System Curve | - - - - - - |

| MARK: EF-6A |
|---|
| PROJECT: COOK FANS |
| DATE: 10/20/2014 |

# SQN-B

## Centrifugal Square Inline
## Belt Drive

**STANDARD CONSTRUCTION FEATURES:**
**All aluminum wheel - Galvanized steel housing - Three removable access doors - Closed cell neoprene gasketing - Inlet and discharge duct collars - Universal mounting feet - Regreasable bearings in a cast housing rated at 200,000 hours average life - Permanently lubricated ball bearing motor - Adjustable pitch drives through 5 HP - All fans factory adjusted to specified fan RPM - Transit tested packaging.**

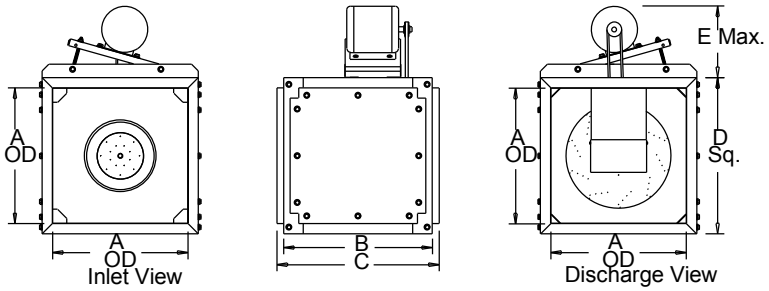


**Performance** (*Bhp includes 8% drive loss)

| Qty | Catalog Number | Flow (CFM) | SP (inwc) | Fan RPM | Power* (HP) | FEG |
|---|---|---|---|---|---|---|
| 1 | 150SQN-B | 2500 | 1.50 | 1752 | 1.25 | 60 |

Altitude (ft): 300 Temperature (F): 120

**Motor Information**

| HP | RPM | Volts/Ph/Hz | Enclosure | Mounted |
|---|---|---|---|---|
| 2 | 1725 | 208/3/60 | TEFC -PE | Yes |

**Sound Data Inlet Sound Power by Octave Band**

| 1 | 2 | 3 | 4 | 5 | 6 | 7 | 8 | LwA | dBA | Sones |
|---|---|---|---|---|---|---|---|---|---|---|
| 83 | 86 | 85 | 84 | 79 | 75 | 72 | 67 | 85 | 74 | 22 |

**Accessories:**
Premium Efficiency Motor (Min. 86.5%)
SHAFT GROUNDING RING
STD DISCONNECT PREWIRED
BDM-20 24V
BELT GUARD
FLANGED INLET
FLANGED OUTLET
INLET FLEX DUCT CONN
OUTLET FLEX DUCT CON
EXTENDED LUBE LINES
SC-125 SET(4) - ISOLATORS

**Dimensions** (inches)

| | |
|---|---|
| A | 20 |
| B | 21-7/8 |
| C | 23-7/8 |
| D | 23 |
| E | 12-3/4 |

NOTE: Accessories may affect dimensions shown.

| Shipping Weight(lbs)*** | 253 |
|---|---|

***Includes fan, motor & accessories.

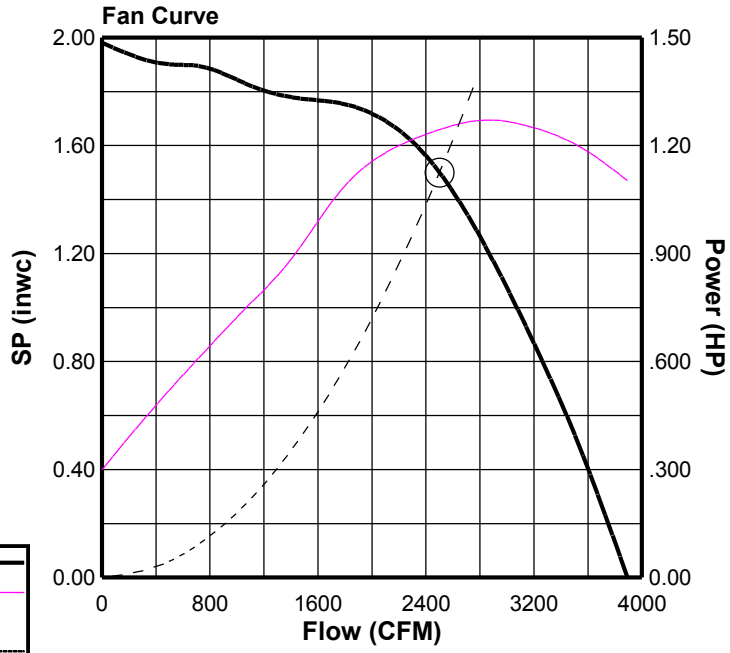


**Fan Curve Legend**

| | |
|---|---|
| CFM vs SP | ——— |
| CFM vs HP | ——— |
| Point of Operation | ◯ |
| System Curve | - - - - - - |

| |
|---|
| **MARK: RH-1** |
| **PROJECT: COOK FANS** |
| **DATE: 10/20/2014** |

# TRE

## Extruded Relief or Intake Ventilator

**STANDARD CONSTRUCTION FEATURES:**
**Heavy gauge all aluminum construction - Birdscreen - Solid welded and mitered tier corners with a built in rain catch on each tier - Built in water trough - Welded curb cap corners - Anti-condensate coating on underneath side of topcap - Five year warranty.**

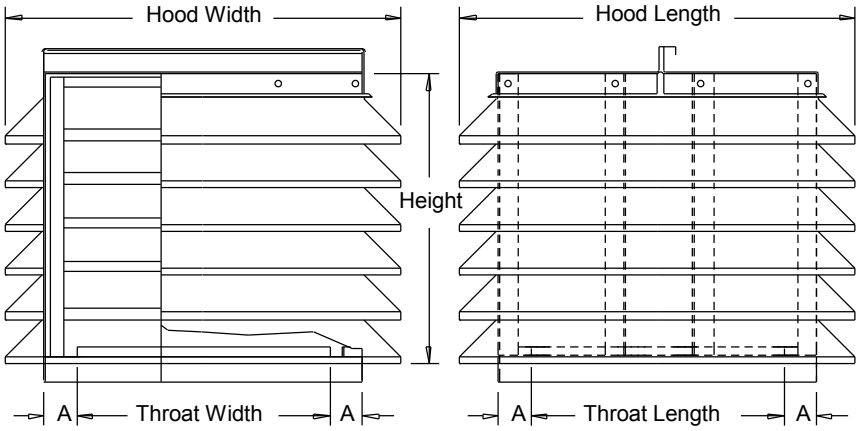


**Performance (Relief)** (*Bhp includes 8% drive loss)

| Qty | Catalog Number | Flow (CFM) | SP (inwc) | Installation |
|---|---|---|---|---|
| 1 | 16X36X4TRE | 2500 | .089 | Ducted |

Altitude (ft): 300 Temperature (F): 120

**Accessories:**
BDM 17.5X37.5 115V(THROAT MOUNTED)

**Dimensions** (inches)

| | |
|---|---|
| **Throat Width** | 16 |
| **Throat Length** | 36 |
| **Hood Width** | 27.75 |
| **Hood Length** | 47.75 |
| **Height** | 16 |
| **A** | 2.75 |
| **Free Area(Sq.ft)** | 7.69 |

NOTE: Accessories may affect dimensions shown.

| | |
|---|---|
| **Shipping Weight(lbs)*** ** | 228 |

***Includes accessories.

# Gravity Ventilation

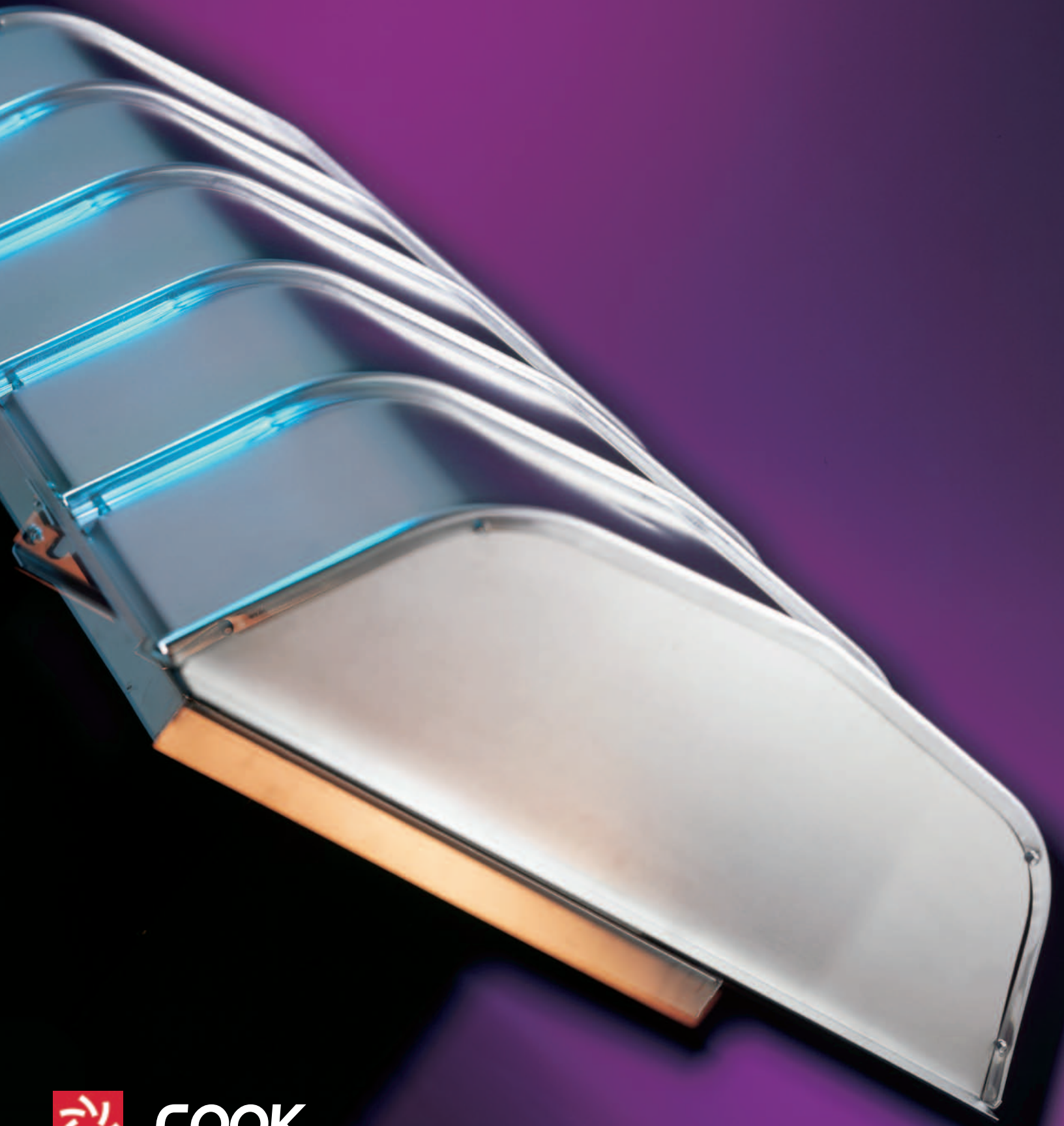

COOK

# GRAVITY VENTILATION

## Gravity Vents

**Page**


Introduction . . . . . 2-3
Gravity Ventilation . . . . . 4-5
Mechanical Ventilation . . . . . 6
Accessories . . . . . 7-8

**Specifications. Dimension & Performance Data**

GI / GR (Gravity Ventilator) . . . . . 9-13
PR (Spun Aluminum) . . . . . 14
TR (Spun Aluminum Tiered) . . . . . 15
TRE (Extruded Tiered) . . . . . 16-18
LSUG (Low Silhoutte Upblast) . . . . . 19
Other Available Products . . . . . 20

PR

## PR

- PR is a spun aluminum intake/relief ventilator designed for use in both gravity and mechanical ventilation systems.
- PR is compact, durable and efficient.
- PR bases are manufactured with a fully developed inlet to provide the most efficient and weather resistant path for both supply and exhaust applications.
- PR units are available in 9 sizes from 8 to 48 inches.

TR

## TR

- TR is a spun aluminum ventilator designed for use in both gravity and mechanical ventilation systems.
- TR units provide an increased intake area by utilizing two spun aluminum tiers and therefore, provide lower intake velocities reducing the introduction of airborne particles or moisture into the building.
- TR bases are manufactured with a fully developed base venturi to provide the most efficient and weather resistant path.
- TR units are available in 9 sizes from 8 to 48 inches.

TRE

## TRE

- TRE is a tiered aluminum intake/relief ventilator designed to be one of the most flexible designs on the market.
- TRE units can be tailored specifically to meet most building exhaust and intake applications.
- The tiers are constructed of high quality extruded aluminum and provide for clean lines that can meet the requirements for even the most demanding architectural applications.
- TRE units are available with throat dimensions from 12” x 12” to 60” x 120”.

LSUG

## LSUG

- LSUG is a low silhouette, gravity relief, upblast ventilator designed for use on vertical high velocity exhaust systems.
- LSUG units include damper doors and a high volume rain gutter to prevent water infiltration.
- LSUG units are available in 7 sizes from 24 to 60 inches.

## Curbs

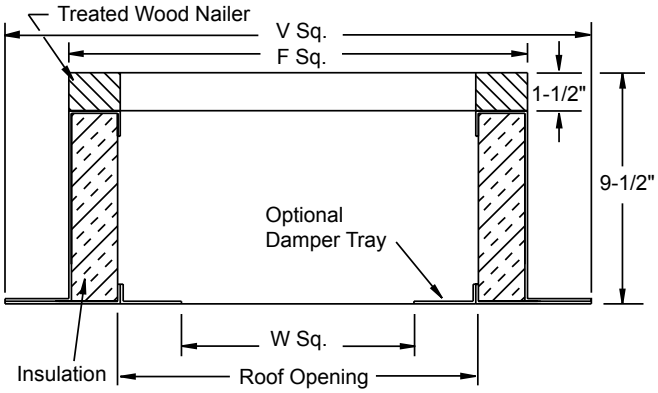


## Curb Construction Features

- Minimum 18 gauge galvanized steel (RCG) or .080 aluminum (RCA).
- 1-1/2", 3 lbs. density thermal and acoustical insulation.
- Continuously welded corners.
- Wood nailer.

## Options

- Damper tray.
- No wood nailer (deduct 1-1/2" from height).
- 13-1/2" tall construction.
- 3" cant (add 4" to V Sq. dimension).

**GI / GR / TRE Curb Sizing -** The curb size for a unit is found by adding 4" to each dimension of the throat size. For a 24 x 30 GI, the appropriate galvanized curb would be a RCG 28 x 34. Additional information can be found in **LOREN COOK** submittals.

### PR/TR/LSUG Curb Dimension Data

| PR/ TR | LSUG | Catalog Number | | F Sq. | V Sq. | W Sq. | Roof Opening |
|---|---|---|---|---|---|---|---|
| | | Galv. | Alum. | | | | |
| 8 | - | RCG-16 | RCA-16 | 16-1/2 | 20-1/2 | 9-3/4 | 13-1/2 |
| 12 | - | RCG-18 | RCA-18 | 18-1/2 | 22-1/2 | 11-3/4 | 15-1/2 |
| 16 | - | RCG-26 | RCA-26 | 26-1/2 | 30-1/2 | 19-3/4 | 23-1/2 |
| 20 | - | RCG-30 | RCA-30 | 30-1/2 | 34-1/2 | 23-3/4 | 27-1/2 |
| 24 | 24 | RCG-34 | RCA-34 | 34-1/2 | 38-1/2 | 27-3/4 | 31-1/2 |
| 30 | 30 | RCG-40 | RCA-40 | 40-1/2 | 44-1/2 | 33-3/4 | 37-1/2 |
| 36 | 36 | RCG-46 | RCA-46 | 46-1/2 | 50-1/2 | 39-3/4 | 43-1/2 |
| 42 | 42 | RCG-52 | RCA-52 | 52-1/2 | 56-1/2 | 45-3/4 | 49-1/2 |
| 48 | 48 | RCG-58 | RCA-58 | 58-1/2 | 62-1/2 | 51-3/4 | 55-1/2 |
| - | 54 | RCG-54 | RCA-54 | 64-1/2 | 66-1/2 | 57-1/4 | 61-1/2 |
| - | 60 | RCG-70 | RCA-50 | 70-1/2 | 74-1/2 | 63-3/4 | 67-1/2 |

All dimensions in inches. When motor operated damper is used, a wood nailer is required. Sound curbs available for most sizes. Contact factory for dimensions.

## Additional Accessories

- Aluminum Bird Screen
- 2" Washable Filters
- Hinged Base
- Magnetic Latches (LSUG)
- Discharge Guard (LSUG)
- Insect Screen
- Galvanized Construction (GI/GR)

## Available Coatings

- **LORENIZED**® - Standard on LSUG
- Epoxy
- Anti-condensate

# Extruded Tiered Gravity Ventilator

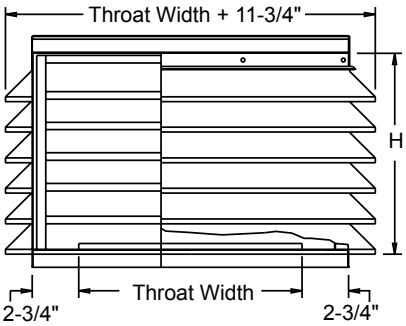


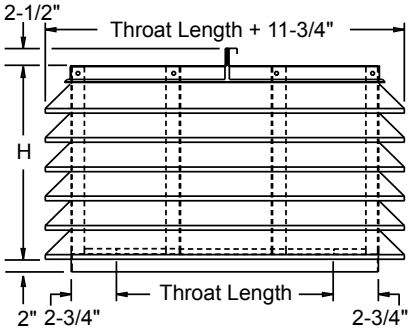


**Description -** Unit shall be an extruded aluminum, roof mounted gravity ventilator.

**Construction** - The unit shall be manufactured of 0.081 gauge extruded aluminum tiers welded to a minimum 8 gauge aluminum support structure. The aluminum hood shall be constructed of minimum 0.063 aluminum and provided with a layer of anti-condensate coating. The aluminum base shall have continuously welded curb cap corners for maximum leak protection. Birdscreen constructed of 1/2" galvanized mesh shall be mounted across the relief opening. Unit shall bear an engraved aluminum nameplate. Nameplate shall indicate design CFM and static pressure. Unit shall be shipped in ISTA Certified Transit Tested Packaging.

**Product** - Unit shall be model TRE as manufactured by Loren Cook Company of Springfield, Missouri.

### Intake Hood Velocity Notes

**Velocity to 500 FPM -** Velocity below 500 FPM provides for a level of protection against the influx of airborne mist or debris.

**Velocity 500 FPM to 1000 FPM** - Within this velocity range there is a possibility that fine, airborne mist will be carried into the building through the vent. Care should be taken in the location of the unit if airborne mist is a problem.

**Velocity Greater Than 1000 FPM** - Velocity in this range is not recommended unless special means are taken to prevent the influx of airborne matter and large droplets of moisture into the interior of the building. Velocities shown are to be used as a guide only. Final application and conditions will be a governing factor.

## TRE - Intake Performance Data

| Throat Size (In.) | No. of Tiers | Hood Size (In.) | Ht. (In.) | Curb Cap Size (In) | Throat Area ($FT^2$) | | | Static Pressure Drop | | | | | | | | | |
|---|---|---|---|---|---|---|---|---|---|---|---|---|---|---|---|---|---|
| | | | | | | Ducted | | 0.020 | 0.055 | 0.100 | 0.150 | 0.200 | 0.250 | 0.300 | 0.350 | 0.400 | 0.500 |
| | | | | | | Non-Ducted | | 0.028 | 0.068 | 0.134 | 0.198 | 0.264 | 0.325 | 0.390 | 0.455 | 0.520 | 0.645 |
| | | | | | | Hood Area | Shipping Weight | CFM | | | | | | | | | |
| 12 x 12 | 2 | 23.75 x 23.75 | 9 | 17.5 x 17.5 | 1.0 | 2.3 | 47 | 324 | 513 | 725 | 888 | 1026 | 1147 | 1256 | 1357 | 1451 | 1622 |
| 12 x 14 | 2 | 23.75 x 25.75 | 9 | 17.5 x 19.5 | 1.2 | 2.4 | 50 | 365 | 577 | 817 | 1000 | 1155 | 1291 | 1414 | 1528 | 1633 | 1826 |
| 12 x 16 | 2 | 23.75 x 27.75 | 9 | 17.5 x 21.5 | 1.3 | 2.5 | 52 | 404 | 638 | 902 | 1105 | 1276 | 1427 | 1563 | 1688 | 1805 | 2018 |
| 12 x 18 | 2 | 23.75 x 29.75 | 9 | 17.5 x 23.5 | 1.5 | 2.6 | 54 | 440 | 696 | 984 | 1205 | 1391 | 1556 | 1704 | 1841 | 1968 | 2200 |
| 12 x 24 | 2 | 23.75 x 35.75 | 9 | 17.5 x 29.5 | 2.0 | 3.0 | 61 | 541 | 856 | 1210 | 1482 | 1711 | 1913 | 2096 | 2264 | 2420 | 2706 |
| 14 x 14 | 2 | 25.75 x 25.75 | 9 | 19.5 x 19.5 | 1.4 | 2.5 | 52 | 409 | 646 | 913 | 1119 | 1292 | 1444 | 1582 | 1709 | 1827 | 2043 |
| 14 x 16 | 2 | 25.75 x 27.75 | 9 | 19.5 x 21.5 | 1.6 | 2.6 | 54 | 449 | 710 | 1004 | 1229 | 1420 | 1587 | 1739 | 1878 | 2008 | 2245 |
| 14 x 18 | 2 | 25.75 x 29.75 | 9 | 19.5 x 23.5 | 1.8 | 2.7 | 56 | 487 | 770 | 1089 | 1334 | 1540 | 1722 | 1886 | 2038 | 2178 | 2435 |
| 14 x 24 | 2 | 25.75 x 35.75 | 9 | 19.5 x 29.5 | 2.3 | 3.1 | 63 | 592 | 936 | 1323 | 1621 | 1872 | 2092 | 2292 | 2476 | 2647 | 2959 |
| 14 x 30 | 2 | 25.75 x 41.75 | 12.5 | 19.5 x 35.5 | 2.9 | 5.1 | 69 | 855 | 1352 | 1912 | 2342 | 2704 | 3023 | 3312 | 3577 | 3824 | 4275 |
| 16 x 16 | 2 | 27.75 x 27.75 | 9 | 21.5 x 21.5 | 1.8 | 2.7 | 56 | 491 | 776 | 1098 | 1345 | 1553 | 1736 | 1901 | 2054 | 2196 | 2455 |
| 16 x 18 | 2 | 27.75 x 29.75 | 9 | 21.5 x 23.5 | 2.0 | 2.8 | 58 | 530 | 838 | 1186 | 1452 | 1677 | 1875 | 2054 | 2218 | 2372 | 2652 |
| 16 x 24 | 2 | 27.75 x 35.75 | 9 | 21.5 x 29.5 | 2.7 | 3.2 | 65 | 638 | 1008 | 1426 | 1746 | 2016 | 2254 | 2469 | 2667 | 2851 | 3188 |
| 16 x 30 | 3 | 27.75 x 41.75 | 12.5 | 21.5 x 35.5 | 3.3 | 5.3 | 83 | 932 | 1474 | 2085 | 2554 | 2949 | 3297 | 3611 | 3901 | 4170 | 4662 |
| 16 x 32 | 3 | 27.75 x 43.75 | 12.5 | 21.5 x 37.5 | 3.6 | 5.4 | 86 | 978 | 1547 | 2187 | 2679 | 3093 | 3458 | 3788 | 4092 | 4374 | 4891 |
| 18 x 18 | 2 | 29.75 x 29.75 | 9 | 23.5 x 23.5 | 2.3 | 3.0 | 61 | 571 | 902 | 1276 | 1563 | 1804 | 2017 | 2210 | 2387 | 2552 | 2853 |
| 18 x 24 | 2 | 29.75 x 35.75 | 9 | 23.5 x 29.5 | 3.0 | 3.3 | 67 | 680 | 1975 | 1520 | 1861 | 2149 | 2403 | 2632 | 2843 | 3039 | 3398 |
| 18 x 30 | 3 | 29.75 x 41.75 | 12.5 | 23.5 x 35.5 | 3.8 | 5.4 | 86 | 1004 | 1587 | 2244 | 2748 | 3174 | 3548 | 3887 | 4198 | 4488 | 5018 |
| 18 x 32 | 3 | 29.75 x 43.75 | 12.5 | 23.5 x 37.5 | 4.0 | 5.6 | 88 | 1051 | 1661 | 2350 | 2878 | 3323 | 3715 | 4070 | 4396 | 4699 | 5254 |
| 18 x 36 | 3 | 29.75 x 47.75 | 12.5 | 23.5 x 41.5 | 4.5 | 5.9 | 93 | 1143 | 1807 | 2555 | 3129 | 3614 | 4040 | 4426 | 4780 | 5110 | 5714 |
| 24 x 24 | 3 | 35.75 x 35.75 | 12.5 | 29.5 x 29.5 | 4.0 | 5.4 | 86 | 1033 | 1634 | 2311 | 2830 | 3268 | 3653 | 4002 | 4323 | 4621 | 5167 |
| 24 x 30 | 3 | 35.75 x 41.75 | 12.5 | 29.5 x 35.5 | 5.0 | 5.9 | 93 | 1191 | 1884 | 2664 | 3263 | 3768 | 4213 | 4615 | 4984 | 5329 | 5957 |

# 50FF

- Aluminum border and filter frame
- ½ x ½ x ½" aluminum core
- High free area core
- Minimized pressure drop
- Matches model 50F in appearance

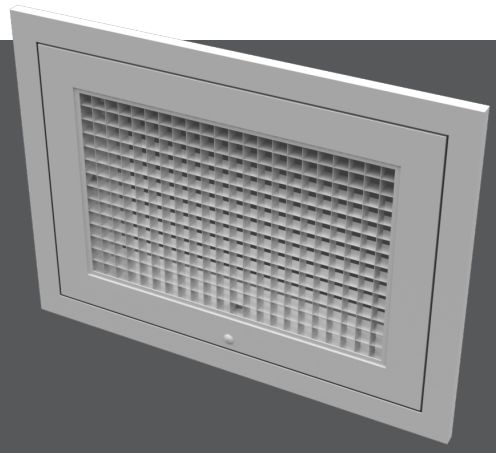

50FF

See website for Specifications

## AVAILABLE MODEL:

50FF / Aluminum Border & Core / Filter Frame

## FINISH

Standard Finish - #26 White

## OVERVIEW

### Filter Return

Titus Eggcrate grilles have the highest free area of any return grille. Available with aluminum border and aluminum grid; steel border and aluminum grid; or entirely stainless steel construction. Offered in ½ x ½ x ½", ½ x ½ x 1", or 1 x 1 x 1" core sizes. Also available as a filtered return.

For Performance Data, refer to page I22

## OPTIONS

- ½ x ½ x ½" Aluminum Eggcrate Core
- 1 inch Filter Frame
- Available Border Types:
  #1 - Surface Mount
  #3 - Lay-In
- Hidden Screw Holes
- Filter by Others