Gaithersburg
A CHARACTER COUNTS! CITY

City of Gaithersburg
31 South Summit Avenue, Gaithersburg, Maryland 20877

REQUEST FOR BIDS

No. 2016-008

CASEY COMMUNITY CENTER INTERIOR RENOVATIONS

EXHIBIT B
SPECIFICATIONS

MAYOR
Jud Ashman

COUNCIL MEMBERS
Cathy Drzyzgula
Henry Marraffa, Jr.
Michael Sesma
Neil Harris
Ryan Spiegel

CITY MANAGER
Tony Tomasello

Interior Renovations
at
Casey Community Center
Gaithersburg, MD

Project Specifications

(Permit Submission)

07.20.2015

Gaithersburg

A CHARACTER COUNTS! CITY

Prepared by
NIKA Architects + Engineers
For
City of Gaithersburg

CASEY COMMUNITY CENTER INTERIOR RENOVATION
PROJECT MASTER SPECIFICATIONS

TABLE OF CONTENTS

	DIVISION 00 - SPECIAL SECTIONS	**DATE**
00 01 15	List of Drawing Sheets	08-10
	DIVISION 01 - GENERAL REQUIREMENTS	
01 00 00	General Requirements	02-10
	DIVISION 04 – MASONRY	
04 22 00	CONCRETE UNIT MASONRY	06-14
	DIVISION 06 – WOOD,PLASTICS AND COMPOSITES	
06 20 23	INTERIOR FINISH CARPENTRY	09-14
06 41 16	PLASTIC-LAMINATE-FACED ARCHITECTURAL CABINETS	06-14
	DIVISION 07 - THERMAL AND MOISTURE PROTECTION	
07 21 00	THERMAL INSULATION	06-14
07 92 00	JOINT SEALANTS	06-14
	DIVISION 08 - OPENINGS	
08 14 16	FLUSH WOOD DOORS	06-14
	DIVISION 09 – FINISHES	
09 22 16	NON-STRUCTURAL METAL FRAMING	06-14
09 65 13	RESILIENT BASE AND ACCESSORIES	06-14
09 65 19	RESILIENT TILE FLOORING	06-14

	DIVISION 12 - FURNISHINGS	
12 32 16	MANUFACTURED PLASTIC-LAMINATE-FACED CASEWORK	06-14
	DIVISION 22 – PLUMBING	
220719	PLUMBING PIPING INSULATION	03-15
221116	DOMESTIC WATER PIPING	03-15
221316	SANITARY WASTE AND VENT PIPING	12-12
221319	SANITARY WASTE PIPING SPECIALTIES	03-13
224216.16	COMMERCIAL SINKS	03-15
	DIVISION 23 – HEATING, VENTILATING, AND AIR CONDITIONING (HVAC)	
23 05 13	Common Motor Requirements for HVAC Equipment	09-11
23 05 53	Identification for HVAC Piping and Equipment	03-13
23 05 93	Testing, Adjusting, and Balancing for HVAC	09-13
23 07 13	Duct Insulation	03-15
23 08 00	Commissioning of HVAC	03-15
23 23 00	REFRIGERANT PIPING	03-15
23 33 11 13	Metal ducts	03-15
23 34 16	Centrifugal HVAC fans	03-13
23 37 13.13	AIR DIFFUSERS	09-14
23 37 13.23	AIR REGISTERS AND GRILLES	09-14
23 41 00	PARTICULATE AIR FILTRATION	03-15
23 72 00	AIR-TO-AIR ENERGY RECOVERY EQUIPMENT	03-15
23 81 26	SPLIT-SYSTEM AIR-CONDITIONERS	03-15
23 82 39.13	CABINET UNIT HEATERS	03-15

	DIVISION 26 – ELECTRICAL	
26 05 19	Low-Voltage Electrical Power Conductors and Cables	09-14
26 05 26	GROUNDING AND BONDING FOR ELECTRICAL SYSTEMS	
26 05 33	Raceway and Boxes for Electrical Systems	09-14
26 24 16	Panelboards	03-15
26 27 26	Wiring Devices	12-14
26 51 16	Fluorescent Interior Lighting	09-14
26 52 19	Emergency and Exit Lighting	09-14
	DIVISION 27 – COMMUNICATIONS	
27 15 00	COMMUNICATIONS HORIZONTAL CABLING	09-14

SECTION 042200 - CONCRETE UNIT MASONRY

PART 1 - GENERAL

1.1 RELATED DOCUMENTS

A. Drawings and general provisions of the Contract, including General and Supplementary Conditions and Division 01 Specification Sections, apply to this Section.

1.2 SUMMARY

A. Section Includes:

1. Concrete masonry units.
2. Mortar and grout.
3. Masonry-joint reinforcement.
4. Miscellaneous masonry accessories.

B. Products Installed but not Furnished under This Section:

C. Related Requirements:

1.3 DEFINITIONS

A. CMU(s): Concrete masonry unit(s).

1.4 PREINSTALLATION MEETINGS

A. Preinstallation Conference: Conduct conference at Casey Community Center.

1.5 ACTION SUBMITTALS

A. Product Data: For each type of product.

B. Samples for Initial Selection:

1. To match existing masonry units.

1.6 INFORMATIONAL SUBMITTALS

A. Material Certificates: For each type and size of the following:

1. Masonry units.

    a. Include data on material properties Retain first subparagraph below only if retaining unit-strength method in "Performance Requirements" Article or if requirements for average net-area compressive strength of units are retained in Part 2.

B. Cold-Weather and Hot-Weather Procedures: Detailed description of methods, materials, and equipment to be used to comply with requirements.

1.7 QUALITY ASSURANCE

A. Testing Agency Qualifications: Qualified according to ASTM C 1093 for testing indicated.

B. Sample Panels: Build sample panels to verify selections made under Sample submittals and to demonstrate aesthetic effects. Comply with requirements in Section 014000 "Quality Requirements" for mockups.

1. Build sample panels for each type of exposed unit masonry construction typical exterior wall typical interior wall typical exterior and interior walls in sizes approximately 48 inches (1200 mm60 inches (1500 mm) long by 36 inches (900 mm) 48 inches (1200 mm) high by full thickness.
2. Build sample panels facing south.
3. Where masonry is to match existing, build panels adjacent and parallel to existing surface.
4. Protect approved sample panels from the elements with weather-resistant membrane.
5. Approval of sample panels is for color, texture, and blending of masonry units; relationship of mortar and sealant colors to masonry unit colors; tooling of joints; aesthetic qualities of workmanship; and other material and construction qualities specifically approved by Architect in writing.

    a. Approval of sample panels does not constitute approval of deviations from the Contract Documents contained in sample panels unless Architect specifically approves such deviations in writing.

C. Mockups: Build mockups to verify selections made under Sample submittals, to demonstrate aesthetic effects, and to set quality standards for materials and execution. Mockup may become part of the new work.

1. Build mockups for each type of exposed unit masonry construction typical exterior wall typical interior wall typical exterior and interior walls in sizes approximately 48 inches (1200 mm) 60 inches (1500 mm) 72 inches (1800 mm)96 inches (2400 mm) long by 36 inches (900 mm) 48 inches (1200 mm) 60 inches (1500 mm) 72 inches (1800 mm) high by full thickness, including face and backup wythes and accessories.

1.8 DELIVERY, STORAGE, AND HANDLING

A. Store masonry units on elevated platforms in a dry location. If units are not stored in an enclosed location, cover tops and sides of stacks with waterproof sheeting, securely tied. If units become wet, do not install until they are dry.

B. Deliver preblended, dry mortar mix in moisture-resistant containers. Store preblended, dry mortar mix in delivery containers on elevated platforms in a dry location or in covered weatherproof dispensing silos.

C. Store masonry accessories, including metal items, to prevent corrosion and accumulation of dirt and oil.

1.9 FIELD CONDITIONS

A. Protection of Masonry: During construction, cover tops of walls, projections, and sills with waterproof sheeting at end of each day's work. Cover partially completed masonry when construction is not in progress.

1. Extend cover a minimum of 24 inches (600 mm) down both sides of walls, and hold cover securely in place.

B. Stain Prevention: Prevent grout, mortar, and soil from staining the face of masonry to be left exposed or painted. Immediately remove grout, mortar, and soil that come in contact with such masonry.

1. Turn scaffold boards near the wall on edge at the end of each day to prevent rain from splashing mortar and dirt onto completed masonry.

C. Cold-Weather Requirements: Do not use frozen materials or materials mixed or coated with ice or frost. Do not build on frozen substrates. Remove and replace unit masonry damaged by frost or by freezing conditions. Comply with cold-weather construction requirements contained in TMS 602/ACI 530.1/ASCE 6.

1. Cold-Weather Cleaning: Use liquid cleaning methods only when air temperature is 40 deg F (4 deg C) and higher and will remain so until masonry has dried, but not less than seven days after completing cleaning.

D. Hot-Weather Requirements: Comply with hot-weather construction requirements contained in TMS 602/ACI 530.1/ASCE 6.

PART 2 - PRODUCTS

2.1 MANUFACTURERS

A. Source Limitations for Masonry Units: Obtain exposed masonry units of a uniform texture and color, or a uniform blend within the ranges accepted for these characteristics, from single source from single manufacturer for each product required.

Copyright 2014 AIA MasterSpec Premium

2.2 PERFORMANCE REQUIREMENTS

2.3 UNIT MASONRY, GENERAL

A. Masonry Standard: Comply with TMS 602/ACI 530.1/ASCE 6 except as modified by requirements in the Contract Documents.

B. Defective Units: Referenced masonry unit standards may allow a certain percentage of units to contain chips, cracks, or other defects exceeding limits stated. Do not use units where such defects are exposed in the completed WorkSee BIA Technical Notes 16B and NCMA TEK 7-3 for information on determining fire-resistance ratings of masonry walls.

C. Fire-Resistance Ratings: Comply with requirements for existing fire-resistance-rated assembly designs.

1. Where fire-resistance-rated construction is indicated, units shall be listed and labeled by a qualified testing agency acceptable to authorities having jurisdiction.

2.4 CONCRETE MASONRY UNITS

A. Shapes: Provide shapes indicated and as follows, with exposed surfaces matching exposed faces of adjacent units unless otherwise indicated.

1. Provide special shapes for lintels, corners, jambs, sashes, movement joints, headers, bonding, and other special conditions.
2. Provide matching units for outside corners unless otherwise indicated.

B. CMUs: ASTM C 90.
1. Density Classification: Normal weight unless otherwise indicated.
2. Size (Width): match existing.
3. Exposed Faces: match existing.

2.5 CONCRETEANDMASONRY LINTELS

A. General: Provide one of the following:

B. Concrete Lintels: ASTM C 1623, matching CMUs in color, texture, and density classification; and with reinforcing bars indicated. Provide lintels with net-area compressive strength not less than that of CMUs.

Copyright 2014 AIA MasterSpec Premium

2.6 MORTAR AND GROUT MATERIALS

A. Colored Cement Products: Packaged blend made from portland cement and hydrated lime masonry cement or mortar cement and mortar pigments, all complying with specified requirements, and containing no other ingredients.

B. Water: Potable.

2.7 REINFORCEMENT

1. <Double click here to find, evaluate, and insert list of manufacturers and products.>

B. Masonry-Joint Reinforcement, General: Ladder type complying with ASTM A 951/A 951M.

1. Interior Walls: Mill-galvanized carbon steel.
2. Wire Size for Side Rods: 0.148-inch (3.77-mm) 0.187-inch (4.76-mm) diameter.
3. Wire Size for Cross Rods: 0.148-inch (3.77-mm) 0.187-inch (4.76-mm) diameter.
4. Spacing of Cross Rods: Not more than 16 inches (407 mm) o.c.
5. Provide in lengths as required, with prefabricated corner and tee units.

2.8 MORTAR AND GROUT MIXES

A. General: Do not use admixtures, including pigments, air-entraining agents, accelerators, retarders, water-repellent agents, antifreeze compounds, or other admixtures unless otherwise indicated.

1. Do not use calcium chloride in mortar or grout.

B. Mortar for Unit Masonry: Comply with ASTM C 270, Specification. Provide the following types of mortar for applications stated unless another type is indicated.
1. For interior nonload-bearing partitions, Type O may be used instead of Type N.

C.
1. Mix to match existing masonry walls.
2. Application: Use pigmented mortar for exposed mortar joints with the following units:

3. Mix to match existing.

Copyright 2014 AIA MasterSpec Premium

PART 3 - EXECUTION

3.1 EXAMINATION

A. Examine conditions, with Installer present, for compliance with requirements for installation tolerances and other conditions affecting performance of the Work.

1. For the record, prepare written report, endorsed by Installer, listing conditions detrimental to performance of the Work.
2. Verify that substrates are free of substances that would impair mortar bond.

B. Before installation, examine rough-in and built-in construction for piping systems to verify actual locations of piping.

C. Proceed with installation only after unsatisfactory conditions have been corrected.

3.2 INSTALLATION, GENERAL

A. Build chases and recesses to accommodate items specified in this and other Sections.

B. Leave openings for equipment to be installed before completing masonry. After installing equipment, complete masonry to match construction immediately adjacent to opening.

C. Use full-size units without cutting if possible. If cutting is required to provide a continuous pattern or to fit adjoining construction, cut units with motor-driven saws; provide clean, sharp, unchipped edges. Allow units to dry before laying unless wetting of units is specified. Install cut units with cut surfaces and, where possible, cut edges concealed.

3.3 LAYING MASONRY WALLS

A. Lay out walls in advance for accurate spacing of surface bond patterns with uniform joint thicknesses and for accurate location of openings, movement-type joints, returns, and offsets. Avoid using less-than-half-size units, particularly at corners, jambs, and, where possible, at other locations.

B. Bond Pattern for Exposed Masonry: Unless otherwise indicated, lay exposed masonry to match existing.
1. At fire-rated partitions, treat joint between top of partition and underside of structure above to comply.

3.4 MORTAR BEDDING AND JOINTING

A. Lay hollow CMUs as follows:

1. Bed face shells in mortar and make head joints of depth equal to existing.
2. Bed webs in mortar in all courses of piers, columns, and pilasters.

Copyright 2014 AIA MasterSpec Premium

B. Tool exposed joints slightly concave when thumbprint hard, using a jointer larger than joint thickness unless otherwise indicated.

C. Cut joints flush for masonry walls to receive plaster or other direct-applied finishes (other than paint) unless otherwise indicated.

3.5 LINTELS

A. Provide concrete or masonry steel lintels where shown and where openings of more than 24 inches (610 mm) for block-size units are shown without structural steel or other supporting lintels.

B. Provide minimum bearing of 8 inches (200 mm) at each jamb unless otherwise indicated.
   1.

3.6 REPAIRING, POINTING, AND CLEANING

A. Remove and replace masonry units that are loose, chipped, broken, stained, or otherwise damaged or that do not match adjoining units. Install new units to match adjoining units; install in fresh mortar, pointed to eliminate evidence of replacement.

B. Pointing: During the tooling of joints, enlarge voids and holes, and completely fill with mortar. Point up joints, including corners, openings, and adjacent construction, to provide a neat, uniform appearance. Prepare joints for sealant application, where indicated.

C. In-Progress Cleaning: Clean unit masonry as work progresses by dry brushing to remove mortar fins and smears before tooling joints.

D. Final Cleaning:
   1. Clean concrete masonry by applicable cleaning methods indicated in NCMA TEK 8-4A.

3.7 MASONRY WASTE DISPOSAL

A. Salvageable Materials: Unless otherwise indicated, excess masonry materials are Contractor's property. At completion of unit masonry work, remove from Project site.

END OF SECTION 042200

Copyright 2014 AIA MasterSpec Premium

SECTION 062023 - INTERIOR FINISH CARPENTRY

PART 1 - GENERAL

1.1 RELATED DOCUMENTS

A. Drawings and general provisions of the Contract, including General and Supplementary Conditions and Division 01 Specification Sections, apply to this Section.

1.2 SUMMARY

A. Section Includes:

1. Interior trim, including nonfire-rated interior door frames.
2. Fire-rated interior door frames.
3. Shelving and clothes rods.

B. Related Requirements:
1. Section 061053 "Miscellaneous Rough Carpentry" for furring, blocking, and other carpentry work not exposed to view.
2. Section 099123 "Interior Painting" for priming and backpriming of interior finish carpentry.

1.3 DEFINITIONS

1.4 ACTION SUBMITTALS

A. Product Data: For each type of process and factory-fabricated product. Indicate component materials, dimensions, profiles, textures, and colors and include construction and application details.

1. Include data for wood-preservative treatment from chemical-treatment manufacturer and certification by treating plant that treated materials comply with requirements. Indicate type of preservative used and net amount of preservative retained. Include chemical-treatment manufacturer's written instructions for finishing treated material.
2. Include data for fire-retardant treatment from chemical-treatment manufacturer and certification by treating plant that treated materials comply with requirements.
3. For products receiving a waterborne treatment, include statement that moisture content of treated materials was reduced before shipment to Project site to levels specified.

B. Samples for Verification:

1. For each species and cut of lumber and panel products with nonfactory-applied finish, with half of exposed surface finished, 50 sq. in. (300 sq. cm) for lumber and 8 by 10 inches (200 by 250 mm) for panels.

Copyright 2014 AIA MasterSpec Premium

1.5 QUALITY ASSURANCE

1.6 DELIVERY, STORAGE, AND HANDLING

A. Stack lumber, plywood, and other panels flat with spacers between each bundle to provide air circulation. Protect materials from weather by covering with waterproof sheeting, securely anchored. Provide for air circulation around stacks and under coverings.

B. Deliver interior finish carpentry materials only when environmental conditions comply with requirements specified for installation areas. If interior finish carpentry materials must be stored in other than installation areas, store only where environmental conditions comply with requirements specified for installation areas.

1.7 FIELD CONDITIONS

A. Do not install finish carpentry materials that are wet, moisture damaged, or mold damaged.

1. Indications that materials are wet or moisture damaged include, but are not limited to, discoloration, sagging, or irregular shape.
2. Indications that materials are mold damaged include, but are not limited to, fuzzy or splotchy surface contamination and discoloration.

PART 2 - PRODUCTS

2.1 MATERIALS, GENERAL

A. Lumber: DOC PS 20 and applicable rules of grading agencies indicated. If no grading agency is indicated, comply with the applicable rules of any rules-writing agency certified by the American Lumber Standard Committee's Board of Review. Grade lumber by an agency certified by the American Lumber Standard Committee's Board of Review to inspect and grade lumber under the rules indicated.

1. Factory mark each piece of lumber with grade stamp of grading agency.
2. For exposed lumber, mark grade stamp on end or back of each piece.

Copyright 2014 AIA MasterSpec Premium

2.2 INTERIOR TRIM

A. Lumber Trim for Opaque Finish (Painted Finish):

1. Species and Grade: Eastern white pine, D Select.
2. Species and Grade: Eastern white, Idaho white, lodgepole, ponderosa, radiata, or sugar pine, D Select (Quality); NeLMA, NLGA, or WWPA.
3. Species and Grade: White woods, D Select.
4. For other grades of wood consult with the Cor.
5. Maximum Moisture Content: 19 percent with at least 85 percent of shipment at 12 percent or less.

2.3 SHELVING AND CLOTHES RODS

A. Exposed Closet Shelving: Made from the following material one of the following materials, 3/4 inch (19 mm) thick.

1. Particleboard with radiused and filled or solid-wood front edge.
2. MDF with radiused or solid-wood front edge.
3. Wood boards as specified above for lumber trim for opaque finish.

B. Shelf Cleats: 3/4-by-5-1/2-inch (19-by-140-mm) boards with hole and notch to receive clothes rods, as specified above for shelving lumber trim for opaque finish.

C. Shelf Brackets with Rod Support: BHMA A156.16, B04051; prime-painted formed steel.

D. Shelf Brackets without Rod Support: BHMA A156.16, B04041; prime-painted formed steel.

E. Clothes Rods: 1-1/2-inch- (38-mm-) diameter, clear, kiln-dried hardwood.

F. Clothes Rods: 1-5/16-inch- (33-mm-) diameter, aluminum tubes.

G. Rod Flanges: Aluminum.

2.4 MISCELLANEOUS MATERIALS

A. Fasteners for Interior Finish Carpentry: Nails, screws, and other anchoring devices of type, size, material, and finish required for application indicated to provide secure attachment, concealed where possible.

2.5 FABRICATION

A. Back out or kerf backs of the following members, except those with ends exposed in finished work:

1. Interior standing and running trim, except shoe and crown molds.

Copyright 2014 AIA MasterSpec Premium

B. Ease edges of lumber less than 1 inch (25 mm) in nominal thickness to 1/16-inch (1.5-mm) radius and edges of lumber 1 inch (25 mm) or more in nominal thickness to 1/8-inch (3-mm) radius.

PART 3 - EXECUTION

3.1 EXAMINATION

A. Examine finish carpentry materials before installation. Reject materials that are wet, moisture damaged, and mold damaged.

B. Proceed with installation only after unsatisfactory conditions have been corrected.

3.2 PREPARATION

A. Clean substrates of projections and substances detrimental to application.

B. Before installing interior finish carpentry, condition materials to average prevailing humidity in installation areas for a minimum of 24 hours unless longer conditioning is recommended by manufacturer.

3.3 INSTALLATION, GENERAL

A. Do not use materials that are unsound; warped; improperly treated or finished; inadequately seasoned; too small to fabricate with proper jointing arrangements; or with defective surfaces, sizes, or patterns.

B. Install interior finish carpentry level, plumb, true, and aligned with adjacent materials. Use concealed shims where necessary for alignment.

1. Scribe and cut interior finish carpentry to fit adjoining work. Refinish and seal cuts as recommended by manufacturer.
2. Where face fastening is unavoidable, countersink fasteners, fill surface flush, and sand unless otherwise indicated.
3. Install to tolerance of 1/8 inch in 96 inches (3 mm in 2438 mm) for level and plumb. Install adjoining interior finish carpentry with 1/32-inch (0.8-mm) maximum offset for flush installation and 1/16-inch (1.5-mm) maximum offset for reveal installation.

3.4 STANDING AND RUNNING TRIM INSTALLATION

A. Install with minimum number of joints practical, using full-length pieces from maximum lengths of lumber available. Do not use pieces less than 24 inches (610 mm) long, except where necessary. Stagger joints in adjacent and related standing and running trim. Cope at returns, miter at outside corners, and cope at inside corners to produce tight-fitting joints with full-surface contact throughout length of joint. Use scarf joints for end-to-end joints. Plane backs of casings to provide uniform thickness across joints where necessary for alignment.
1. Install trim after gypsum-board joint finishing operations are completed.

Copyright 2014 AIA MasterSpec Premium

2. Install without splitting; drill pilot holes before fastening where necessary to prevent splitting. Fasten to prevent movement or warping. Countersink fastener heads on exposed carpentry work and fill holes.

3. Install in full lengths without end joints.
4. Stagger end joints in random pattern to uniformly distribute joints on each wall.
5. Install with uniform end joints with only end-matched (tongue-and-groove) joints within each field of paneling.

3.5 SHELVING AND CLOTHES ROD INSTALLATION

A. Cut shelf cleats at ends of shelves about 1/2 inch (13 mm) less than width of shelves and sand exposed ends smooth.

B. Install shelf cleats by fastening to framing or backing with finish nails or trim screws, set below face and filled. Space fasteners not more than 16 inches (400 mm) o.c. Use two fasteners at each framing member or fastener location for cleats 4 inches nominal (89 mm actual) in width and wider.

C. Install shelf brackets according to manufacturer's written instructions, spaced not more than 32 inches (800 mm) 36 inches (900 mm) o.c. Fasten to framing members, blocking, or metal backing, or use toggle bolts or hollow wall anchors.

D. Cut shelves to neatly fit openings with only enough gap to allow shelves to be removed and reinstalled. Install shelves, fully seated on cleats, brackets, and supports.

1. Fasten shelves to cleats with finish nails or trim screws, set flush.

E. Install rod flanges for rods as indicated. Fasten to shelf cleats, framing members, blocking, or metal backing, or use toggle bolts or hollow wall anchors. Install rods in rod flanges.

3.6 ADJUSTING

A. Replace interior finish carpentry that is damaged or does not comply with requirements. Interior finish carpentry may be repaired or refinished if work complies with requirements and shows no evidence of repair or refinishing. Adjust joinery for uniform appearance.

3.7 CLEANING

A. Clean interior finish carpentry on exposed and semiexposed surfaces. Restore damaged or soiled areas and touch up factory-applied finishes if any.

3.8 PROTECTION

A. Protect installed products from damage from weather and other causes during construction.

B. Remove and replace finish carpentry materials that are wet, moisture damaged, and mold damaged.

Copyright 2014 AIA MasterSpec Premium

1. Indications that materials are wet or moisture damaged include, but are not limited to, discoloration, sagging, or irregular shape.
2. Indications that materials are mold damaged include, but are not limited to, fuzzy or splotchy surface contamination and discoloration.

END OF SECTION 062023

Copyright 2014 AIA MasterSpec Premium

SECTION 064116 - PLASTIC-LAMINATE-FACED ARCHITECTURAL CABINETS

PART 1 - GENERAL

1.1 RELATED DOCUMENTS

A. Drawings and general provisions of the Contract, including General and Supplementary Conditions and Division 01 Specification Sections, apply to this Section.

1.2 SUMMARY

A. Section Includes:

1. Plastic-laminate-faced architectural cabinets.
2. Wood furring, blocking, shims, and hanging strips for installing plastic-laminate-faced architectural cabinets unless concealed within other construction before cabinet installation.

B. Related Requirements:

1. Section 061053 "Rough Carpentry" for wood furring, blocking, shims, and hanging strips required for installing cabinets and concealed within other construction before cabinet installation.
2. Section 123623.13 "Plastic-Laminate-Clad Countertops."

1.3 PREINSTALLATION MEETINGS

A. Preinstallation Conference: Conduct conference at Casey Community Center.

1.4 ACTION SUBMITTALS

A. Product Data: For each type of product including panel products cabinet hardware and accessories.

B. Sustainable Design Submittals:

C. Shop Drawings: Show location of each item, dimensioned plans and elevations, large-scale details, attachment devices, and other components.
1. Show locations and sizes of furring, blocking, and hanging strips, including concealed blocking and reinforcement specified in other Sections.

Copyright 2014 AIA MasterSpec Premium

2. Show locations and sizes of cutouts and holes for electrical switches and outlets and other items installed in architectural plastic-laminate cabinets.
3. Apply AWI Quality Certification Program label to Shop Drawings.

D. Samples for Initial Selection:

1. Plastic laminates.
2. PVC edge material.

E. Samples for Verification:
1. Wood-grain plastic laminates, 12 by 24 inches (300 by 600 mm, for each type, pattern and surface finish, with one sample applied to core material and specified edge material applied to one edge.
2. Corner pieces as follows:

a. Cabinet-front frame joints between stiles and rails, as well as exposed end pieces, 18 inches (450 mm) high by 18 inches (450 mm) wide by 6 inches (150 mm) deep.
b. Miter joints for standing trim.

1.5 INFORMATIONAL SUBMITTALS

A. Qualification Data: For Installer fabricator.

B. Product Certificates: For each type of product

1. Composite wood and agrifiber products.
2. Adhesives.

C. Woodwork Quality Standard Compliance Certificates: AWI Quality Certification Program certificates.

D. Evaluation Reports: For fire-retardant-treated materials, from ICC-ES.

1.6 QUALITY ASSURANCE

A. Fabricator Qualifications: Shop that employs skilled workers who custom fabricate products similar to those required for this Project and whose products have a record of successful in-service performance. Shop is a certified participant in AWI's Quality Certification Program. Delete "Installer Qualifications" Paragraph below if not required or available. If AWI Quality Certification Program labels or certificates are required for installation, installer must be a certified participant. If woodwork must be FSC certified, fabricator must either install woodwork or be FSC certified for chain of custody.

B. Installer Qualifications: Fabricator of products or Certified participant in AWI's Quality Certification Program.

C. Mockups: Build mockups to verify selections made under Sample submittals and to demonstrate aesthetic effects and set quality standards for materials and execution.
1. Subject to compliance with requirements, approved mockups may become part of the completed Work if undisturbed at time of Substantial Completion.

Copyright 2014 AIA MasterSpec Premium

1.7 DELIVERY, STORAGE, AND HANDLING

A. Do not deliver cabinets until painting and similar operations that could damage woodwork have been completed in installation areas. If cabinets must be stored in other than installation areas, store only in areas where environmental conditions comply with requirements specified in "Field Conditions" Article.

1.8 FIELD CONDITIONS

A. Environmental Limitations: Do not deliver or install cabinets until, wet work is complete, and HVAC system is operating and maintaining temperature and relative humidity at occupancy levels during the remainder of the construction period.

B. Field Measurements: Where cabinets are indicated to fit to other construction, verify dimensions of other construction by field measurements before fabrication, and indicate measurements on Shop Drawings. Coordinate fabrication schedule with construction progress to avoid delaying the Work.

1. Locate concealed framing, blocking, and reinforcements that support cabinets by field measurements before being enclosed, and indicate measurements on Shop Drawings.

C. Established Dimensions: Where cabinets are indicated to fit to other construction, establish dimensions for areas where cabinets are to fit. Provide allowance for trimming at site, and coordinate construction to ensure that actual dimensions correspond to established dimensions.

1.9 COORDINATION

A. Coordinate sizes and locations of framing, blocking, furring, reinforcements, and other related units of Work specified in other Sections to ensure that cabinets can be supported and installed as indicated.

PART 2 - PRODUCTS

2.1 ARCHITECTURAL CABINET FABRICATORS

A. Fabricators: Subject to compliance with requirements, provide products recommended by the Cor:

2.2 PLASTIC-LAMINATE-FACED ARCHITECTURAL CABINETS

A. Quality Standard: Unless otherwise indicated, comply with the "Architectural Woodwork Standards" for grades of architectural plastic-laminate cabinets indicated for construction, finishes, installation, and other requirements.

1. Provide labels from AWI certification program indicating that woodwork including installation, complies with requirements of grades specified.

Copyright 2014 AIA MasterSpec Premium

B. Grade: Premium

C. Type of Construction: Frameless

D. Cabinet, Door, and Drawer Front Interface Style: See architectural drawings

E. Reveal Dimension: 1/2 inch (13 mm).

F. Laminate Cladding for Exposed Surfaces:

1. Horizontal Surfaces: Grade HGS
2. Postformed Surfaces: Grade HGP.
3. Vertical Surfaces: Grade HGS Retain one edge construction from "Edges" Subparagraph below. Coordinate with standards and grade selection.
4. Edges: Grade HGS
5. Pattern Direction: As selected by the Cor.
6. Delete "Materials for Semiexposed Surfaces" Paragraph below for woodworker's option from choices in standard.

    a. Edges of Plastic-Laminate Shelves: PVC tape, 0.018-inch (0.460-mm) minimum thickness, matching laminate in color, pattern, and finish

    b. For semiexposed backs of panels with exposed plastic-laminate surfaces, provide surface of high-pressure decorative laminate, NEMA LD 3, Grade VGS

7. Drawer Sides and Backs: Solid-hardwood lumber
8. Drawer Bottoms: Hardwood plywood Retain "Dust Panels" Paragraph below if required. Dust panels are not required by standards.

G. Dust Panels: 1/4-inch (6.4-mm) plywood or tempered hardboard above compartments and drawers unless located directly under tops.

H. Concealed Backs of Panels with Exposed Plastic-Laminate Surfaces: High-pressure decorative laminate, NEMA LD 3, Grade BKL.

I. Drawer Construction: Fabricate with exposed fronts fastened to subfront with mounting screws from interior of body.

1. Join subfronts, backs, and sides with glued rabbeted joints supplemented by mechanical fasteners or glued dovetail joints.

J. Colors, Patterns, and Finishes: Provide materials and products that result in colors and textures of exposed laminate surfaces complying with the following requirements:
1. As selected by COR from laminate manufacturer's full range in the following categories:

Copyright 2014 AIA MasterSpec Premium

2.3 WOOD MATERIALS

A. Wood Products: Provide materials that comply with requirements of referenced quality standard for each type of woodwork and quality grade specified unless otherwise indicated.

1. Wood Moisture Content: 5 to 10 percent.

B. Composite Wood and Agrifiber Products: Provide materials that comply with requirements of referenced quality standard for each type of woodwork and quality grade specified unless otherwise indicated.

1. Medium-Density Fiberboard: ANSI A208.2, Grade 130

2. Veneer-Faced Panel Products (Hardwood Plywood): HPVA HP-1.

2.4 CABINET HARDWARE AND ACCESSORIES

A. General: Provide cabinet hardware and accessory materials associated with architectural cabinets. Consult with the COR for selection.

B. Paragraphs below describing hardware items are examples only; revise to suit Project. Delete if schedule is included on Drawings. See the "Architectural Woodwork Standards" or BHMA standards for illustrations of and designations for additional types of cabinet hardware.

C. Shelf Rests: BHMA A156.9, B04013; metal

D. Drawer Slides: BHMA A156.9.

1. Grade 1 and Grade 2: Side mounted full-extension type; zinc-plated steel with polymer rollers.
2. For drawers not more than 3 inches (75 mm) high and not more than 24 inches (600 mm) wide, provide rade 2
3. For drawers more than 3 inches (75 mm) high but not more than 6 inches (150 mm) high and not more than 24 inches (600 mm) wide, provide Grade 1
4. For drawers more than 6 inches (150 mm) high or more than 24 inches (600 mm) wide, provide Grade 1HD-100.
5. For trash bins not more than 20 inches (500 mm) high and 16 inches (400 mm) wide, provide Grade 1HD-100.

E. Door Locks: BHMA A156.11, E07121.

F. Drawer Locks: BHMA A156.11, E07041.

G. Door and Drawer Silencers: BHMA A156.16, L03011.

Copyright 2014 AIA MasterSpec Premium

H. Exposed Hardware Finishes: For exposed hardware, provide finish that complies with BHMA A156.18 for BHMA finish number indicated.

I. For concealed hardware, provide manufacturer's standard finish that complies with product class requirements in BHMA A156.9.

2.5 MISCELLANEOUS MATERIALS

A. Furring, Blocking, Shims, and Hanging Strips: Softwood or hardwood lumber kiln dried to less than 15 percent moisture content.

B. Anchors: Select material, type, size, and finish required for each substrate for secure anchorage. Provide metal expansion sleeves or expansion bolts for post-installed anchors. Use nonferrous-metal or hot-dip galvanized anchors and inserts at inside face of exterior walls and at floors.

C. Adhesive for Bonding Plastic Laminate: Unpigmented contact cement Contact cement

D. Retain "Adhesive for Bonding Edges" Subparagraph below unless good chemical, fire, or temperature resistance is required.

1. Adhesive for Bonding Edges: Hot-melt adhesive or adhesive specified above for faces.

2.6 FABRICATION

A. Fabricate cabinets to dimensions, profiles, and details indicated.

B. Complete fabrication, including assembly and hardware application, to maximum extent possible before shipment to Project site. Disassemble components only as necessary for shipment and installation. Where necessary for fitting at site, provide ample allowance for scribing, trimming, and fitting.

C. Shop-cut openings to maximum extent possible to receive hardware, appliances, electrical work, and similar items. Locate openings accurately and use templates or roughing-in diagrams to produce accurately sized and shaped openings. Sand edges of cutouts to remove splinters and burrs.

PART 3 - EXECUTION

3.1 PREPARATION

A. Before installation, condition cabinets to average prevailing humidity conditions in installation areas.

B. Before installing cabinets, examine shop-fabricated work for completion and complete work as required.

Copyright 2014 AIA MasterSpec Premium

3.2 INSTALLATION

A. Grade: Install cabinets to comply with same grade as item to be installed.

B. Assemble cabinets and complete fabrication at Project site to the extent that it was not completed in the shop.

C. Install cabinets level, plumb, true, and straight. Shim as required with concealed shims. Install level and plumb to a tolerance of 1/8 inch in 96 inches (3 mm in 2400 mm).

D. Scribe and cut cabinets to fit adjoining work, refinish cut surfaces, and repair damaged finish at cuts.

E. Anchor cabinets to anchors or blocking built in or directly attached to substrates. Secure with countersunk, concealed fasteners and blind nailing. Use fine finishing nails or finishing screws for exposed fastening, countersunk and filled flush with woodwork.

1. Use filler matching finish of items being installed.

F. Cabinets: Install without distortion so doors and drawers fit openings properly and are accurately aligned. Adjust hardware to center doors and drawers in openings and to provide unencumbered operation. Complete installation of hardware and accessory items as indicated.

1. Install cabinets with no more than 1/8 inch in 96-inch (3 mm in 2400-mm) sag, bow, or other variation from a straight line.
2. Fasten wall cabinets through back, near top and bottom, and at ends not more than 16 inches (400 mm) o.c. with size and type of screws recommended by the cabinet manufacturer. Consult with the Cor prior to erection.

3.3 ADJUSTING AND CLEANING

A. Repair damaged and defective cabinets, where possible, to eliminate functional and visual defects; where not possible to repair, replace woodwork. Adjust joinery for uniform appearance.

B. Clean, lubricate, and adjust hardware.

C. Clean cabinets on exposed and semiexposed surfaces.

END OF SECTION 064116

Copyright 2014 AIA MasterSpec Premium

SECTION 072100 - THERMAL INSULATION

PART 1 - GENERAL

1.1 RELATED DOCUMENTS

A. Drawings and general provisions of the Contract, including General and Supplementary Conditions and Division 01 Specification Sections, apply to this Section.

1.2 SUMMARY

A. Section Includes:
1. Glass-fiber blanket.
2. Mineral-wool blanket.

B. Related Requirements:

1. Section 042000 "Unit Masonry" for insulation installed in masonry cells.

1.3 ACTION SUBMITTALS

A. Product Data: For each type of product.

1.4 INFORMATIONAL SUBMITTALS

A. Product Test Reports: For each product, for tests performed by a qualified testing agency.

B. Evaluation Reports: For foam-plastic insulation, from ICC-ES.

1.5 DELIVERY, STORAGE, AND HANDLING

A. Protect insulation materials from physical damage and from deterioration due to moisture, soiling, and other sources. Store inside and in a dry location. Comply with manufacturer's written instructions for handling, storing, and protecting during installation.

Copyright 2014 AIA MasterSpec Premium

PART 2 - PRODUCTS

2.1 GLASS-FIBER BLANKET

A. Glass-Fiber Blanket, Kraft Faced see architectural drawings: ASTM C 665, Type II (nonreflective faced), Class C (faced surface not rated for flame propagation); Category 1 (membrane is a vapor barrier).

B. Glass-Fiber Blanket, Foil Faced around showers: ASTM C 665, Type III (reflective faced), Class B (faced surface with a flame-propagation resistance of 0.12 W/sq. cm); Category 1 (membrane is a vapor barrier), faced with foil scrim, foil-scrim kraft, or foil-scrim polyethylene.

2.2 GLASS-FIBER BOARD

2.3 MINERAL-WOOL BLANKETS

A. Mineral-Wool Blanket, Unfaced See Architectural drawings: ASTM C 665, Type I (blankets without membrane facing); consisting of fibers; with maximum flame-spread and smoke-developed indexes of 25 and 50, respectively, per ASTM E 84; passing ASTM E 136 for combustion characteristics.

B. Mineral-Wool Blanket, Reinforced-Foil Faced Around Showers: ASTM C 665, Type III (reflective faced), Class A (faced surface with a flame-spread index of 25 or less per ASTM E 84); Category 1 (membrane is a vapor barrier), faced with foil scrim, foil-scrim kraft, or foil-scrim polyethylene.

Copyright 2014 AIA MasterSpec Premium

2.4 INSULATION FASTENERS

A. Adhesively Attached, Spindle-Type Anchors: Plate welded to projecting spindle; capable of holding insulation of specified thickness securely in position with self-locking washer in place.

1. Plate: Perforated, galvanized carbon-steel sheet, 0.030 inch (0.762 mm) thick by 2 inches (50 mm) square.
2. Spindle: Copper-coated, low-carbon steel; fully annealed; 0.105 inch (2.67 mm) in diameter; length to suit depth of insulation.

B. Adhesively Attached, Angle-Shaped, Spindle-Type Anchors: Angle welded to projecting spindle; capable of holding insulation of specified thickness securely in position with self-locking washer in place.

1. Angle: Formed from 0.030-inch- (0.762-mm-) thick, perforated, galvanized carbon-steel sheet with each leg 2 inches (50 mm) square.
2. Spindle: Copper-coated, low-carbon steel; fully annealed; 0.105 inch (2.67 mm) in diameter; length to suit depth of insulation.

C. Insulation-Retaining Washers: Self-locking washers formed from 0.016-inch- (0.41-mm-) thick galvanized-steel sheet, with beveled edge for increased stiffness, sized as required to hold insulation securely in place, but not less than 1-1/2 inches (38 mm) square or in diameter.

1. Protect ends with capped self-locking washers incorporating a spring steel insert to ensure permanent retention of cap in the following locations:

a. Crawl spaces.
b. Ceiling plenums.
c. Attic spaces.

D. Insulation Standoff: Spacer fabricated from galvanized mild-steel sheet for fitting over spindle of insulation anchor to maintain air space of 1 inch (25 mm) 2 inches (50 mm) 3 inches (76 mm) between face of insulation and substrate to which anchor is attached.

E. Anchor Adhesive: Product with demonstrated capability to bond insulation anchors securely to substrates without damaging insulation, fasteners, or substrates.

2.5 ACCESSORIES

A. Insulation for Miscellaneous Voids:

Copyright 2014 AIA MasterSpec Premium

1. Glass-Fiber Insulation: ASTM C 764, Type II, loose fill; with maximum flame-spread and smoke-developed indexes of 5, per ASTM E 84.

B. Adhesive for Bonding Insulation: Product compatible with insulation and air and water barrier materials, and with demonstrated capability to bond insulation securely to substrates without damaging insulation and substrates.

1.

PART 3 - EXECUTION

3.1 PREPARATION

A. Clean substrates of substances that are harmful to insulation, including removing projections capable of puncturing insulation or vapor retarders, or that interfere with insulation attachment.

3.2 INSTALLATION, GENERAL

A. Comply with insulation manufacturer's written instructions applicable to products and applications.

B. Install insulation that is undamaged, dry, and unsoiled and that has not been left exposed to ice, rain, or snow at any time.

C. Extend insulation to envelop entire area to be insulated. Fit tightly around obstructions and fill voids with insulation. Remove projections that interfere with placement.

D. Provide sizes to fit applications and selected from manufacturer's standard thicknesses, widths, and lengths. Apply single layer of insulation units unless multiple layers are otherwise shown or required to make up total thickness or to achieve R-value.

3.3 INSTALLATION OF INSULATION IN FRAMED CONSTRUCTION

A. Blanket Insulation: Install in cavities formed by framing members according to the following requirements:

1. Use insulation widths and lengths that fill the cavities formed by framing members. If more than one length is required to fill the cavities, provide lengths that will produce a snug fit between ends.
2. Place insulation in cavities formed by framing members to produce a friction fit between edges of insulation and adjoining framing members.
3. Maintain 3-inch (76-mm) clearance of insulation around recessed lighting fixtures not rated for or protected from contact with insulation.
4. For metal-framed wall cavities where cavity heights exceed 96 inches (2438 mm), support unfaced blankets mechanically and support faced blankets by taping flanges of insulation to flanges of metal studs.

Copyright 2014 AIA MasterSpec Premium

a. Exterior Walls: Set units with facing placed toward exterior of construction
b. Interior Walls: Set units with facing placed toward areas of high humidity.

B. Miscellaneous Voids: Install insulation in miscellaneous voids and cavity spaces where required to prevent gaps in insulation using the following materials:

1. Glass-Fiber Insulation: Compact to approximately 40 percent of normal maximum volume equaling a density of approximately 2.5 lb/cu. ft. (40 kg/cu. m).

3.4 PROTECTION

A. Protect installed insulation from damage due to harmful weather exposures, physical abuse, and other causes. Provide temporary coverings or enclosures where insulation is subject to abuse and cannot be concealed and protected by permanent construction immediately after installation.

END OF SECTION 072100

Copyright 2014 AIA MasterSpec Premium

SECTION 079200 - JOINT SEALANTS

PART 1 - GENERAL

1.1 RELATED DOCUMENTS

A. Drawings and general provisions of the Contract, including General and Supplementary Conditions and Division 01 Specification Sections, apply to this Section.

1.2 SUMMARY

A. Section Includes:

1. Silicone joint sealants.
2. Nonstaining silicone joint sealants.
3. Mildew-resistant joint sealants.

B. Related Requirements:

1.3 PREINSTALLATION MEETINGS

A. Preinstallation Conference: Conduct conference at Casey Community Center.

1.4 ACTION SUBMITTALS

A. Product Data: For each joint-sealant product.

B. Sustainable Design Submittals:

C. Samples for Initial Selection: Manufacturer's color charts consisting of strips of cured sealants showing the full range of colors available for each product exposed to view.

D. Samples for Verification: For each kind and color of joint sealant required, provide Samples with joint sealants in 1/2-inch- wide joints formed between two 6-inch-long strips of material matching the appearance of exposed surfaces adjacent to joint sealants.

E. Joint-Sealant Schedule: Include the following information:

1. Joint-sealant application, joint location, and designation.
2. Joint-sealant manufacturer and product name.
3. Joint-sealant formulation.
4. Joint-sealant color.

Copyright 2014 AIA MasterSpec Premium

1.5 INFORMATIONAL SUBMITTALS

A. Product Test Reports: For each kind of joint sealant, for tests performed by manufacturer and witnessed by a qualified testing agency.

1.6 QUALITY ASSURANCE

A. Installer Qualifications: An authorized representative who is trained and approved by manufacturer.

B. Mockups: Install sealant in mockups of assemblies specified in other Sections that are indicated to receive joint sealants specified in this Section. Use materials and installation methods specified in this Section.

1.7 PRECONSTRUCTION TESTING

1. Testing will not be required if joint-sealant manufacturers submit data that are based on previous testing, not older than 24 months, of sealant products for adhesion to, staining of, and compatibility with joint substrates and other materials matching those submitted.

1.8 FIELD CONDITIONS

A. Do not proceed with installation of joint sealants under the following conditions:

1. When ambient and substrate temperature conditions are outside limits permitted by joint-sealant manufacturer or are below 40 deg F (5 deg C).
2. When joint substrates are wet.
3. Where joint widths are less than those allowed by joint-sealant manufacturer for applications indicated.
4. Where contaminants capable of interfering with adhesion have not yet been removed from joint substrates.

1.9 WARRANTY

A. Special Installer's Warranty: Installer agrees to repair or replace joint sealants that do not comply with performance and other requirements specified in this Section within specified warranty period.

1. Warranty Period: Two years from date of Substantial Completion.

B. Special Manufacturer's Warranty: Manufacturer agrees to furnish joint sealants to repair or replace those joint sealants that do not comply with performance and other requirements specified in this Section within specified warranty period.

1. Warranty Period: Five years from date of Substantial Completion.

C. Special warranties specified in this article exclude deterioration or failure of joint sealants from the following:

Copyright 2014 AIA MasterSpec Premium

1. Movement of the structure caused by stresses on the sealant exceeding sealant manufacturer's written specifications for sealant elongation and compression.
2. Disintegration of joint substrates from causes exceeding design specifications.
3. Mechanical damage caused by individuals, tools, or other outside agents.
4. Changes in sealant appearance caused by accumulation of dirt or other atmospheric contaminants.

PART 2 - PRODUCTS

2.1 JOINT SEALANTS, GENERAL

A. Compatibility: Provide joint sealants, backings, and other related materials that are compatible with one another and with joint substrates under conditions of service and application, as demonstrated by joint-sealant manufacturer, based on testing and field experience.

B. Colors of Exposed Joint Sealants: As selected by Cor.

2.2 SILICONE JOINT SEALANTS

A. Silicone, S, NS, 100/50, NT: Single-component, nonsag, plus 100 percent and minus 50 percent movement capability, nontraffic-use, neutral-curing silicone joint sealant; ASTM C 920, Type S, Grade NS, Class 100/50, Use NT.

B. Silicone, S, NS, 50, NT: Single-component, nonsag, plus 50 percent and minus 50 percent movement capability, nontraffic-use, neutral-curing silicone joint sealant; ASTM C 920, Type S, Grade NS, Class 50, Use NT.

C. Silicone, S, NS, 35, NT: Single-component, nonsag, plus 35 percent and minus 35 percent movement capability. nontraffic-use, neutral-curing silicone joint sealant; ASTM C 920, Type S, Grade NS, Class 35, Use NT.

D. Silicone, S, NS, 25, NT: Single-component, nonsag, plus 25 percent and minus 25 percent movement capability, nontraffic-use, neutral-curing silicone joint sealant; ASTM C 920, Type S, Grade NS, Class 25, Use NT.

Copyright 2014 AIA MasterSpec Premium

E. Silicone, Acid Curing, S, NS, 25, NT: Single-component, nonsag, plus 25 percent and minus 25 percent movement capability, nontraffic-use, acid-curing silicone joint sealant: ASTM C 920, Type S, Grade NS, Class 25, Use NT.

F. Silicone, S, NS, 100/50, T, NT: Single-component, nonsag, plus 100 percent and minus 50 percent movement capability, traffic- and nontraffic-use, neutral-curing silicone joint sealant; ASTM C 920, Type S, Grade NS, Class 100/50, Uses T and NT.

G. Silicone, S, NS, 50, T, NT: Single-component, nonsag, plus 50 percent and minus 50 percent movement capability, traffic- and nontraffic-use, neutral-curing silicone joint sealant; ASTM C 920, Type S, Grade NS, Class 50, Uses T and NT.

H. Silicone, S, NS, 25, T, NT: Single-component, nonsag, plus 25 percent and minus 25 percent movement capability, traffic- and nontraffic-use, neutral-curing silicone joint sealant; ASTM C 920, Type S, Grade NS, Class 25, Uses T and NT.

I. Silicone, S, P, 100/50, T, NT: Single-component, pourable, plus 100 percent and minus 50 percent movement capability traffic- and nontraffic-use, neutral-curing silicone joint sealant; ASTM C 920, Type S, Grade P, Class 100/50, Uses T and NT.

J. Silicone, S, P, 25, T, NT: Single-component, pourable, plus 25 percent and minus 25 percent movement capability, traffic- and nontraffic-use, neutral-curing silicone joint sealant; ASTM C 920, Type S, Grade P, Class 25, Uses T and NT.

K. Silicone, M, P, 100/50, T, NT: Multicomponent, pourable, plus 100 percent and minus 50 percent movement capability, traffic- and nontraffic-use, neutral-curing silicone joint sealant; ASTM C 920, Type M, Grade P, Class 100/50, Uses T and NT.

2.3 NONSTAINING SILICONE JOINT SEALANTS

A. Nonstaining Joint Sealants: No staining of substrates when tested according to ASTM C 1248.

B. Silicone, Nonstaining, S, NS, 100/50, NT: Nonstaining, single-component, nonsag, plus 100 percent and minus 50 percent movement capability, nontraffic-use, neutral-curing silicone joint sealant; ASTM C 920, Type S, Grade NS, Class 100/50, Use NT.

1.

Copyright 2014 AIA MasterSpec Premium

C. Silicone, Nonstaining, S, NS, 50, NT: Nonstaining, single-component, nonsag, plus 50 percent and minus 50 percent movement capability, nontraffic-use, neutral-curing silicone joint sealant; ASTM C 920, Type S, Grade NS, Class 50, Use NT.

1. <Double click here to find, evaluate, and insert list of manufacturers and products.>

D. Silicone, Nonstaining, S, NS, 100/50, T, NT: Nonstaining, single-component, nonsag, plus 100 percent and minus 50 percent movement capability, traffic- and nontraffic-use, neutral-curing silicone joint sealant; ASTM C 920, Type S, Grade NS, Class 100/50, Uses T and NT.

1. <Double click here to find, evaluate, and insert list of manufacturers and products.>

E. Silicone, Nonstaining, M, NS, 50, NT: Nonstaining, multicomponent, nonsag, plus 50 percent and minus 50 percent movement capability, nontraffic-use, neutral-curing silicone joint sealant; ASTM C 920, Type M, Grade NS, Class 50, Use NT.

1. <Double click here to find, evaluate, and insert list of manufacturers and products.>

2.4 URETHANE JOINT SEALANTS

A. Urethane, S, NS, 25, NT: Single-component, nonsag, nontraffic-use, plus 25 percent and minus 25 percent movement capability, urethane joint sealant; ASTM C 920, Type S, Grade NS, Class 25, Use NT.

1. <Double click here to find, evaluate, and insert list of manufacturers and products.>

B. Urethane, S, NS, 100/50, T, NT: Single-component, nonsag, plus 100 percent and minus 50 percent movement capability, traffic- and nontraffic-use, urethane joint sealant; ASTM C 920, Type S, Grade NS, Class 100/50, Uses T and NT.

C. Urethane, S, NS, 25, T, NT: Single-component, nonsag, plus 25 percent and minus 25 percent movement capability, traffic- and nontraffic-use, urethane joint sealant; ASTM C 920, Type S, Grade NS, Class 25, Uses T and NT.

D. Urethane, S, P, 35, T, NT: Single-component, pourable, plus 35 percent and minus 35 percent movement capability, traffic- and nontraffic-use, urethane joint sealant; ASTM C 920, Type S, Grade P, Class 35, Uses T and NT.

E. Urethane, S, P, 25, T, NT: Single-component, pourable, plus 25 percent and minus 25 percent movement capability, traffic- and nontraffic-use, urethane joint sealant; ASTM C 920, Type S, Grade P, Class 25, Uses T and NT.

Copyright 2014 AIA MasterSpec Premium

F. Urethane, M, NS, 50, NT: Multicomponent, nonsag, plus 50 percent and minus 50 percent movement capability nontraffic-use, urethane joint sealant; ASTM C 920, Type M, Grade NS, Class 50, Use NT.

G. Urethane, M, NS, 25, NT: Multicomponent, nonsag, plus 25 percent and minus 25 percent movement capability, nontraffic-use, urethane joint sealant; ASTM C 920, Type M, Grade NS, Class 25, Use NT.

H. Urethane, M, NS, 50, T, NT: Multicomponent, nonsag, plus 50 percent and minus 50 percent movement capability, traffic- and nontraffic-use, urethane joint sealant; ASTM C 920, Type M, Grade NS, Class 50, Uses T and NT.

I. Urethane, M, NS, 25, T, NT: Multicomponent, nonsag, plus 25 percent and minus 25 percent movement capability, traffic- and nontraffic-use, urethane joint sealant; ASTM C 920, Type M, Grade NS, Class 25, Uses T and NT.

J. Urethane, M, P, 50, T, NT: Multicomponent, pourable, plus 50 percent and minus 50 percent movement capability, traffic- and nontraffic-use, urethane joint sealant; ASTM C 920, Type M, Grade P, Class 50, Uses T and NT.

K. Urethane, M, P, 25, T, NT: Multicomponent, pourable, plus 25 percent and minus 25 percent movement capability, traffic- and nontraffic-use, urethane joint sealant; ASTM C 920, Type M, Grade P, Class 25, Uses T and NT.

L. Urethane, Immersible, S, P, 50, T, NT, I: Immersible, single-component, pourable, plus 50 percent and minus 50 percent movement capability, traffic- and nontraffic-use, urethane joint sealant; ASTM C 920, Type S, Grade P, Class 50, Uses T, NT, and I.

M. Urethane, Immersible, S, P, 25, T, NT, I: Immersible, single-component, pourable, plus 25 percent and minus 25 percent movement capability, traffic- and nontraffic-use, urethane joint sealant; ASTM C 920, Type S, Grade P, Class 25, Uses T, NT, and I.

N. Polysulfide, Immersible, M, NS, 25, NT, I: Immersible, multicomponent, nonsag, plus 25 percent and minus 25 percent movement capability, nontraffic-use, polysulfide joint sealant; ASTM C 920, Type M, Grade NS, Class 25, Uses NT and I.

Copyright 2014 AIA MasterSpec Premium

O. Urethane, Immersible, M, NS, 50, T, NT, I: Immersible, multicomponent, nonsag, plus 50 percent and minus 50 percent movement capability, traffic- and nontraffic-use, urethane joint sealant; ASTM C 920, Type M, Grade NS, Class 50, Uses T, NT, and I.

P. Urethane, Immersible, M, NS, 25, T, NT, I: Immersible, multicomponent, nonsag, plus 25 percent and minus 25 percent movement capability, traffic- and nontraffic-use, urethane joint sealant; ASTM C 920, Type M, Grade NS, Class 25, Uses T, NT, and I.

Q. Polysulfide, Immersible, M, NS, 25, T, NT, I: Immersible, multicomponent, nonsag, plus 25 percent and minus 25 percent movement capability, traffic- and nontraffic-use, polysulfide joint sealant; ASTM C 920, Type M, Grade NS, Class 25, Uses T, NT, and I.

R. Urethane, Immersible, M, P, 25, T, NT, I: Immersible, multicomponent, pourable, plus 25 percent and minus 25 percent movement capability, traffic- and nontraffic-use, urethane joint sealant; ASTM C 920, Type M, Grade P, Class 25, Uses T, NT, and I.

2.

2.5 JOINT-SEALANT BACKING

A. Sealant Backing Material, General: Nonstaining; compatible with joint substrates, sealants, primers, and other joint fillers; and approved for applications indicated by sealant manufacturer based on field experience and laboratory testing.

B. Cylindrical Sealant Backings: ASTM C 1330, Type C (closed-cell material with a surface skin or any of the preceding types, as approved in writing by joint-sealant manufacturer for joint application indicated, and of size and density to control sealant depth and otherwise contribute to producing optimum sealant performance.

C. Bond-Breaker Tape: Polyethylene tape or other plastic tape recommended by sealant manufacturer for preventing sealant from adhering to rigid, inflexible joint-filler materials or joint surfaces at back of joint. Provide self-adhesive tape where applicable.

2.6 MISCELLANEOUS MATERIALS

A. Primer: Material recommended by joint-sealant manufacturer where required for adhesion of sealant to joint substrates indicated, as determined from preconstruction joint-sealant-substrate tests and field tests.

Copyright 2014 AIA MasterSpec Premium

B. Cleaners for Nonporous Surfaces: Chemical cleaners acceptable to manufacturers of sealants and sealant backing materials, free of oily residues or other substances capable of staining or harming joint substrates and adjacent nonporous surfaces in any way, and formulated to promote optimum adhesion of sealants to joint substrates.

C. Masking Tape: Nonstaining, nonabsorbent material compatible with joint sealants and surfaces adjacent to joints.

PART 3 - EXECUTION

3.1 EXAMINATION

A. Examine joints indicated to receive joint sealants, with Installer present, for compliance with requirements for joint configuration, installation tolerances, and other conditions affecting performance of the Work.

B. Proceed with installation only after unsatisfactory conditions have been corrected.

3.2 PREPARATION

A. Surface Cleaning of Joints: Clean out joints immediately before installing joint sealants to comply with joint-sealant manufacturer's written instructions and the following requirements:

1. Remove all foreign material from joint substrates that could interfere with adhesion of joint sealant, including dust, paints (except for permanent, protective coatings tested and approved for sealant adhesion and compatibility by sealant manufacturer), old joint sealants, oil, grease, waterproofing, water repellents, water, surface dirt, and frost.
2. Clean porous joint substrate surfaces by brushing, grinding, mechanical abrading, or a combination of these methods to produce a clean, sound substrate capable of developing optimum bond with joint sealants. Remove loose particles remaining after cleaning operations above by vacuuming or blowing out joints with oil-free compressed air. Porous joint substrates include the following:

    a. Concrete.
    b. Masonry.
    c. Unglazed surfaces of ceramic tile.

3. Remove laitance and form-release agents from concrete.
4. Clean nonporous joint substrate surfaces with chemical cleaners or other means that do not stain, harm substrates, or leave residues capable of interfering with adhesion of joint sealants. Nonporous joint substrates include the following:

    a. Metal.
    b. Porcelain enamel.
    c. Glazed surfaces of ceramic tile.
    d. Laminated plastic surfaces.

Copyright 2014 AIA MasterSpec Premium

B. Joint Priming: Prime joint substrates where recommended by joint-sealant manufacturer or as indicated by preconstruction joint-sealant-substrate tests or prior experience. Apply primer to comply with joint-sealant manufacturer's written instructions. Confine primers to areas of joint-sealant bond; do not allow spillage or migration onto adjoining surfaces.

C. Masking Tape: Use masking tape where required to prevent contact of sealant or primer with adjoining surfaces that otherwise would be permanently stained or damaged by such contact or by cleaning methods required to remove sealant smears. Remove tape immediately after tooling without disturbing joint seal.

3.3 INSTALLATION OF JOINT SEALANTS

A. General: Comply with joint-sealant manufacturer's written installation instructions for products and applications indicated, unless more stringent requirements apply.

B. Sealant Installation Standard: Comply with recommendations in ASTM C 1193 for use of joint sealants as applicable to materials, applications, and conditions indicated.

C. Install sealant backings of kind indicated to support sealants during application and at position required to produce cross-sectional shapes and depths of installed sealants relative to joint widths that allow optimum sealant movement capability.

1. Do not leave gaps between ends of sealant backings.
2. Do not stretch, twist, puncture, or tear sealant backings.
3. Remove absorbent sealant backings that have become wet before sealant application, and replace them with dry materials.

D. Install bond-breaker tape behind sealants where sealant backings are not used between sealants and backs of joints.

E. Install sealants using proven techniques that comply with the following and at the same time backings are installed:

1. Place sealants so they directly contact and fully wet joint substrates.
2. Completely fill recesses in each joint configuration.
3. Produce uniform, cross-sectional shapes and depths relative to joint widths that allow optimum sealant movement capability.

F. Tooling of Nonsag Sealants: Immediately after sealant application and before skinning or curing begins, tool sealants according to requirements specified in subparagraphs below to form smooth, uniform beads of configuration indicated; to eliminate air pockets; and to ensure contact and adhesion of sealant with sides of joint.

1. Remove excess sealant from surfaces adjacent to joints.
2. Use tooling agents that are approved in writing by sealant manufacturer and that do not discolor sealants or adjacent surfaces.
3. Provide concave joint profile per Figure 8A in ASTM C 1193 unless otherwise indicated.
4. Provide flush joint profile at locations indicated on Drawings according to Figure 8B in ASTM C 1193.

Copyright 2014 AIA MasterSpec Premium

a. Use masking tape to protect surfaces adjacent to recessed tooled joints.

3.4 FIELD QUALITY CONTROL

A. Field-Adhesion Testing: Field test joint-sealant adhesion to joint substrates as follows:

1. Extent of Testing: Test completed and cured sealant joints as follows:

2. Test Method: Test joint sealants according to Method A, Field-Applied Sealant Joint Hand Pull Tab, in Appendix X1 in ASTM C 1193 or Method A, Tail Procedure, in ASTM C 1521.

   a. For joints with dissimilar substrates, verify adhesion to each substrate separately; extend cut along one side, verifying adhesion to opposite side. Repeat procedure for opposite side.

3. Inspect tested joints and report on the following:

   a. Whether sealants filled joint cavities and are free of voids.
   b. Whether sealant dimensions and configurations comply with specified requirements.
   c. Whether sealants in joints connected to pulled-out portion failed to adhere to joint substrates or tore cohesively. Compare these results to determine if adhesion complies with sealant manufacturer's field-adhesion hand-pull test criteria.

4. Repair sealants pulled from test area by applying new sealants following same procedures used originally to seal joints. Ensure that original sealant surfaces are clean and that new sealant contacts original sealant.

B. Evaluation of Field-Adhesion-Test Results: Sealants not evidencing adhesive failure from testing or noncompliance with other indicated requirements will be considered satisfactory. Remove sealants that fail to adhere to joint substrates during testing or to comply with other requirements. Retest failed applications until test results prove sealants comply with indicated requirements.

3.5 CLEANING

A. Clean off excess sealant or sealant smears adjacent to joints as the Work progresses by methods and with cleaning materials approved in writing by manufacturers of joint sealants and of products in which joints occur.

3.6 PROTECTION

A. Protect joint sealants during and after curing period from contact with contaminating substances and from damage resulting from construction operations or other causes so sealants are without deterioration or damage at time of Substantial Completion. If, despite such protection, damage or deterioration occurs, cut out, remove, and repair damaged or deteriorated joint sealants immediately so installations with repaired areas are indistinguishable from original work.

Copyright 2014 AIA MasterSpec Premium

3.7 JOINT-SEALANT SCHEDULE

A. Joint-Sealant Application: Mildew-resistant interior joints in vertical surfaces and horizontal nontraffic surfaces.

1. Joint Locations:

a. Joints between plumbing fixtures and adjoining walls, floors, and counters.
b. Tile control and expansion joints where indicated.
c. Other joints as indicated on Drawings.

END OF SECTION 079200

Copyright 2014 AIA MasterSpec Premium

SECTION 081416 - FLUSH WOOD DOORS

PART 1 - GENERAL

1.1 RELATED DOCUMENTS

A. Drawings and general provisions of the Contract, including General and Supplementary Conditions and Division 01 Specification Sections, apply to this Section.

1.2 SUMMARY

A. Section Includes:

1. Solid-core doors with wood-veneer MDO hardboard or MDF aces.
2. Factory fitting flush wood doors to frames and factory machining for hardware.

1.3 PREINSTALLATION MEETINGS

A. Preinstallation Conference: Conduct conference at Casey Community Center.

1.4 ACTION SUBMITTALS

A. Product Data: For each type of door. Include details of core and edge construction, louvers, and trim for openings. Include factory-finishing specifications.

B. Shop Drawings: Indicate location, size, and hand of each door; elevation of each kind of door; construction details not covered in Product Data; and the following:

1. Dimensions and locations of blocking.
2. Dimensions and locations of mortises and holes for hardware.
3. Dimensions and locations of cutouts.
4. Undercuts.
5. Requirements for veneer matching.
6. Doors to be factory finished and finish requirements.
7. Fire-protection ratings for fire-rated doors.

C. Samples for Initial Selection: For factory-finished doors.

D. Samples for Verification:
1. Corner sections of doors, approximately 8 by 10 inches (200 by 250 mm), with door faces and edges representing actual materials to be used.
   a. Finish veneer-faced door Samples with same materials proposed for factory-finished doors.

2. Louver blade and frame sections, 6 inches (150 mm) long, for each material and finish specified.

Copyright 2014 AIA MasterSpec Premium

3. Frames for light openings, 6 inches (150 mm) long, for each material, type, and finish required.

1.5 INFORMATIONAL SUBMITTALS

A. Sample Warranty: For special warranty.

B. Quality Standard Compliance Certificates: AWI Quality Certification

1.7 DELIVERY, STORAGE, AND HANDLING

A. Comply with requirements of referenced standard and manufacturer's written instructions.

B. Package doors individually in cardboard cartons and wrap bundles of doors in plastic sheeting.

C. Mark each door on top and bottom rail with opening number used on Shop Drawings.

1.8 FIELD CONDITIONS

A. Environmental Limitations: Do not deliver or install doors until spaces are enclosed and wet work in spaces is complete and dry, and HVAC system is operating and maintaining ambient temperature and humidity conditions at occupancy levels during remainder of construction period.

1.9 WARRANTY

A. A. Special Warranty: Manufacturer agrees to repair or replace doors that fail in materials or workmanship within specified warranty period.

1. Failures include, but are not limited to, the following:

a. Warping (bow, cup, or twist) more than 1/4 inch (6.4 mm) in a 42-by-84-inch (1067-by-2134-mm) section.
b. Telegraphing of core construction in face veneers exceeding 0.01 inch in a 3-inch (0.25 mm in a 76.2-mm) span.

2. Warranty shall also include installation and finishing that may be required due to repair or replacement of defective doors.
3. Warranty Period for Solid-Core Interior Doors: Life of installation.

Copyright 2014 AIA MasterSpec Premium

PART 2 - PRODUCTS

2.1 MANUFACTURERS

A. Source Limitations: Obtain flush wood doors from single manufacturer.

2.2 FLUSH WOOD DOORS, GENERAL

A. Quality Standard: In addition to requirements specified, comply with AWI's

1. Provide AWI Quality Certification Labels indicating that doors comply with requirements of grades specified.
2. Contract Documents contain selections chosen from options in quality standard and additional requirements beyond those of quality standard. Comply with those selections and requirements in addition to quality standard.

B. WDMA I.S.1-A Performance Grade: Heavy Duty.

C. WDMA I.S.1-A Performance Grade:

1. Heavy Duty unless otherwise indicated.
2. Extra Heavy Duty: Classrooms public toilets janitor's closets assembly spaces exits and where indicated.
3. Standard Duty: private toilets and where indicated.

D. Fire-Rated Wood Doors: Doors complying with NFPA 80 that are listed and labeled by a qualified testing agency, for fire-protection ratings indicated,.
1. Edge Construction: Provide edge construction with intumescent seals concealed by outer stile. Comply with specified requirements for exposed edges.
2. Provide doors with glued-wood-stave or structural-composite-lumber cores instead of particleboard cores for doors indicated to receive exit devices.

E. Structural-Composite-Lumber-Core Doors:

1. Structural Composite Lumber: WDMA I.S.10.

a. Screw Withdrawal, Face: 700 lbf (3100 N).
b. Screw Withdrawal, Edge: 400 lbf (1780 N).

Copyright 2014 AIA MasterSpec Premium

2. Edge Construction: At hinge stiles, provide laminated-edge construction with improved screw-holding capability and split resistance. Comply with specified requirements for exposed edges.

   a. Screw-Holding Capability: 550 lbf (2440 N) per WDMA T.M.-10.

J. Interior Solid-Core Doors :

1. Grade: Custom Grade A faces.
2. To match existing doors. Consult with the Cor.
3. Cut: To match existing. Consult with the Cor.
4. Core: Either glued wood stave or structural composite lumber.
5. Construction: Match existing doors. Consult with the Cor.

2.3 DOORS FOR OPAQUE FINISH

A. Interior Solid-Core Doors A601:

1. Grade: Custom.
2. Faces: Match existing doors. See door schedule.

3. Exposed Vertical Edges: Any closed-grain hardwood.
4. Core: Match existing doors.
5. Construction: Match existing doors.
6. WDMA I.S.1-A Performance Grade: Heavy Duty.

2.4 FABRICATION

A. Factory fit doors to suit frame-opening sizes indicated. Comply with clearance requirements of referenced quality standard for fitting unless otherwise indicated.

B. Factory machine doors for hardware that is not surface applied. Locate hardware to comply with DHI-WDHS-3. Comply with final hardware schedules, door frame Shop Drawings, BHMA-156.115-W, and hardware templates. Consult with the Cor.

1. Coordinate with hardware mortises in metal frames to verify dimensions and alignment before factory machining.

C. Openings: Factory cut and trim openings through doors.

1. Light Openings: Trim openings with moldings of material and profile indicated.

2.5 FACTORY FINISHING

A. General: Comply with referenced quality standard for factory finishing. Complete fabrication, including fitting doors for openings and machining for hardware that is not surface applied, before finishing.

Copyright 2014 AIA MasterSpec Premium

1. Finish faces, all four edges, edges of cutouts, and mortises. Stains and fillers may be omitted on bottom edges, edges of cutouts, and mortises.

B. Factory finish doors that are indicated to receive transparent finish.

1. Grade: Custom.
2. Effect: Open-grain finish Filled finish Semifilled finish, produced by applying an additional finish coat to partially fill the wood pores.
3. Sheen: Satin.

4. Grade: Custom.
5. Color: Match existing door color. Consult with the Cor.
6. Sheen: Satin.

PART 3 - EXECUTION

3.1 EXAMINATION

A. Examine doors and installed door frames, with Installer present, before hanging doors.

1. Verify that installed frames comply with indicated requirements for type, size, location, and swing characteristics and have been installed with level heads and plumb jambs.
2. Reject doors with defects.

B. Proceed with installation only after unsatisfactory conditions have been corrected.

3.2 INSTALLATION

A. Installation Instructions: Install doors to comply with manufacturer's written instructions and referenced quality standard, and as indicated.

B. Factory-Fitted Doors: Align in frames for uniform clearance at each edge.

C. Factory-Finished Doors: Restore finish before installation if fitting or machining is required at Project site.

3.3 ADJUSTING

A. Operation: Rehang or replace doors that do not swing or operate freely.

B. Finished Doors: Replace doors that are damaged or that do not comply with requirements. Doors may be repaired or refinished if Work complies with requirements and shows no evidence of repair or refinishing.

END OF SECTION 081416

Copyright 2014 AIA MasterSpec Premium

SECTION 092216 - NON-STRUCTURAL METAL FRAMING

PART 1 - GENERAL

1.1 RELATED DOCUMENTS

A. Drawings and general provisions of the Contract, including General and Supplementary Conditions and Division 01 Specification Sections, apply to this Section.

1.2 SUMMARY

A. Section Includes:

1. Non-load-bearing steel framing systems for interior partitions.
2. Suspension systems for interior ceilings and soffits.
3. Grid suspension systems for gypsum board ceilings.

B. Related Requirements:

1.3 ACTION SUBMITTALS

A. Product Data: For each type of product.

1. Studs and Runners: Provide documentation that framing members' certification is according to SIFA's "Code Compliance Certification Program for Cold-Formed Steel Structural and Non-Structural Framing Members."

PART 2 - PRODUCTS

2.1 PERFORMANCE REQUIREMENTS

A. Fire-Test-Response Characteristics: For fire-resistance-rated assemblies that incorporate non-load-bearing steel framing, provide materials and construction identical to those tested in assembly indicated, according to ASTM E 119 by an independent testing agency.

2.2 FRAMING SYSTEMS

A. Framing Members, General: Comply with ASTM C 754 for conditions indicated.

Copyright 2014 AIA MasterSpec Premium

1. Steel Sheet Components: Comply with ASTM C 645 requirements for metal unless otherwise indicated.
2. Protective Coating: ASTM A 653/A 653M, G40 (Z120), hot-dip galvanized in kitchen area and in other areas.

C. Studs and Runners: ASTM C 645. Use either steel studs and runners or embossed steel studs and runners.

1. Steel Studs and Runners:

a. Minimum Base-Metal Thickness: As indicated on Drawings As required by performance requirements for horizontal deflection 0.0179 inch (0.455 mm) 0.0269 inch (0.683 mm) 0.0296 inch (0.752 mm) 0.0329 inch (0.836 mm).
b. Depth: As indicated on Drawings 3-5/8 inches (92 mm)6 inches (152 mm) 4 inches (102 mm) 2-1/2 inches (64 mm) 1-5/8 inches (41 mm).

2. Embossed Steel Studs and Runners:

a. <Double click here to find, evaluate, and insert list of manufacturers and products.>
b. Minimum Base-Metal Thickness: As indicated on Drawings As required by horizontal deflection performance requirements 0.0147 inch (0.373 mm) 0.0190 inch (0.483 mm) <Insert thickness>.
c. Depth: As indicated on Drawings 3-5/8 inches (92 mm) 6 inches (152 mm) 4 inches (102 mm) 2-1/2 inches (64 mm) 1-5/8 inches (41 mm).

CI. Slip-Type Head Joints: Where indicated, provide one of the following:

1. Clip System: Clips designed for use in head-of-wall deflection conditions that provide a positive attachment of studs to runners while allowing 1-1/2-inch (38-mm).

2. Single Long-Leg Runner System: ASTM C 645 top runner with 2-inch- (51-mm-) deep flanges in thickness not less than indicated for studs, installed with studs friction fit into top runner and with continuous bridging located within 12 inches (305 mm) of the top of studs to provide lateral bracing.
3. Deflection Track: Steel sheet top runner manufactured to prevent cracking of finishes applied to interior partition framing resulting from deflection of structure above; in thickness not less than indicated for studs and in width to accommodate depth of studs.

CII. Flat Strap and Backing Plate: Steel sheet for blocking and bracing in length and width indicated.

Copyright 2014 AIA MasterSpec Premium

1. Minimum Base-Metal Thickness: As indicated on Drawings0.0179 inch (0.455 mm) 0.0269 inch (0.683 mm) 0.0296 inch (0.752 mm) 0.0329 inch (0.836 mm) .

F. Cold-Rolled Channel Bridging: Steel, 0.0538-inch (1.367-mm) minimum base-metal thickness, with minimum 1/2-inch- (13-mm-) wide flanges.

1. Depth: 1-1/2 inches (38 mm) .
2. Clip Angle: Not less than 1-1/2 by 1-1/2 inches (38 by 38 mm), 0.068-inch- (1.72-mm-) thick, galvanized steel.

G. Hat-Shaped, Rigid Furring Channels: ASTM C 645.

1. Minimum Base-Metal Thickness: 0.0179 inch (0.455 mm) 0.0296 inch (0.752 mm) 0.0329 inch (0.836 mm)
2. Depth: As indicated on Drawings7/8 inch (22.2 mm) 1-1/2 inches (38 mm).

H. Cold-Rolled Furring Channels: 0.053-inch (1.34-mm) uncoated-steel thickness, with minimum 1/2-inch- (13-mm-) wide flanges.

1. Depth: 3/4 inch (19 mm).
2. Furring Brackets: Adjustable, corrugated-edge-type steel sheet with minimum uncoated-steel thickness of 0.0329 inch (0.8 mm).
3. Tie Wire: ASTM A 641/A 641M, Class 1 zinc coating, soft temper, 0.062-inch- (1.59-mm-) diameter wire, or double strand of 0.048-inch- (1.21-mm-) diameter wire.

I. Z-Shaped Furring: With slotted or non slotted web, face flange of 1-1/4 inches (32 mm), wall attachment flange of 7/8 inch (22 mm), minimum uncoated-metal thickness of 0.0179 inch (0.455 mm), and depth required to fit insulation thickness indicated.

2.3 SUSPENSION SYSTEMS

A. Tie Wire: ASTM A 641/A 641M, Class 1 zinc coating, soft temper, 0.062-inch- (1.59-mm-) diameter wire, or double strand of 0.048-inch- (1.21-mm-) diameter wire.

B. Hanger Attachments to Concrete:

1. Expansion Anchors: Fabricated from corrosion-resistant materials, with allowable load or strength design capacities calculated according to ICC-ES AC193 and ACI 318 greater than or equal to the design load, as determined by testing per ASTM E 488/E 488M conducted by a qualified testing agency.
2. Power-Actuated Anchors: Fastener system of type suitable for application indicated, fabricated from corrosion-resistant materials, with allowable load capacities calculated according to ICC-ES AC70, greater than or equal to the design load, as determined by testing per ASTM E 1190 conducted by a qualified testing agency.

Copyright 2014 AIA MasterSpec Premium

C. Wire Hangers: ASTM A 641/A 641M, Class 1 zinc coating, soft temper, 0.16 inch (4.12 mm) in diameter.

D. Flat Hangers: Steel sheet, 1 by 3/16 inch (25 by 5 mm) by length indicated .

E. Carrying Channels: Cold-rolled, commercial-steel sheet with a base-metal thickness of 0.0538 inch (1.367 mm) and minimum 1/2-inch- (13-mm-) wide flanges.

1. Depth: As indicated on Drawings2-1/2 inches (64 mm)

F. Furring Channels (Furring Members):

1. Cold-Rolled Channels: 0.0538-inch (1.367-mm) uncoated-steel thickness, with minimum 1/2-inch- (13-mm-) wide flanges, 3/4 inch (19 mm) deep.
2. Steel Studs and Runners: ASTM C 645.

a. Minimum Base-Metal Thickness: As indicated on
b. Depth: As indicated on See "Embossed Steel Studs and Runners" Article in the Evaluations for information about embossed steel studs and runners.

3. Embossed Steel Studs and Runners: ASTM C 645.

a. Minimum Base-Metal Thickness: As indicated on
b. Depth: As indicated on Drawings3-5/8 inches (92 mm).

4. Hat-Shaped, Rigid Furring Channels: ASTM C 645, 7/8 inch (22 mm) deep.

a. Minimum Base-Metal Thickness: As indicated on Drawings

5. Resilient Furring Channels: 1/2-inch- (13-mm-) deep members designed to reduce sound transmission.

a. Configuration: Asymmetrical or hat shaped.

G. Grid Suspension System for Gypsum Board Ceilings: ASTM C 645, direct-hung system composed of main beams and cross-furring members that interlock.

2.4 AUXILIARY MATERIALS

A. General: Provide auxiliary materials that comply with referenced installation standards.

1. Fasteners for Metal Framing: Of type, material, size, corrosion resistance, holding power and other properties required to fasten steel members to substrates.

Copyright 2014 AIA MasterSpec Premium

PART 3 - EXECUTION

3.1 EXAMINATION

A. Examine areas and substrates, with Installer present, and including welded hollow-metal frames, cast-in anchors, and structural framing, for compliance with requirements and other conditions affecting performance of the Work.

B. Proceed with installation only after unsatisfactory conditions have been corrected.

3.2 PREPARATION

A. Suspended Assemblies: Coordinate installation of suspension systems with installation of overhead structure to ensure that inserts and other provisions for anchorages to building structure have been installed to receive hangers at spacing required to support the Work and that hangers will develop their full strength.

1. Furnish concrete inserts and other devices indicated to other trades for installation in advance of time needed for coordination and construction.

3.3 INSTALLATION, GENERAL

A. Installation Standard: ASTM C 754.
1. Gypsum Board Assemblies: Also comply with requirements in ASTM C 840 that apply to framing installation.

B. Install framing and accessories plumb, square, and true to line, with connections securely fastened.

C. Install supplementary framing, and blocking to support fixtures, equipment services, heavy trim, grab bars, toilet accessories, furnishings, or similar construction.

D. Install bracing at terminations in assemblies.

E. Do not bridge building control and expansion joints with non-load-bearing steel framing members. Frame both sides of joints independently.

3.4 INSTALLING FRAMED ASSEMBLIES

A. Install framing system components according to spacings indicated, but not greater than spacings required by referenced installation standards for assembly types.

1. Single-Layer Application: 16 inches (406 mm) o.c. unless otherwise indicated.
2. Tile Backing Panels: 16 inches (406 mm) o.c. unless otherwise indicated.

B. Install studs so flanges within framing system point in same direction.

Copyright 2014 AIA MasterSpec Premium

C. Install tracks (runners) at floors and overhead supports. Extend framing full height to structural supports or substrates above suspended ceilings except where partitions are indicated to terminate at suspended ceilings. Continue framing around ducts that penetrate partitions above ceiling.

1. Slip-Type Head Joints: Where framing extends to overhead structural supports, install to produce joints at tops of framing systems that prevent axial loading of finished assemblies.
2. Door Openings: Screw vertical studs at jambs to jamb anchor clips on door frames; install runner track section (for cripple studs) at head and secure to jamb studs.

   a. Install two studs at each jamb unless otherwise indicated.
   b. Extend jamb studs through suspended ceilings and attach to underside of overhead structure.

3. Other Framed Openings: Frame openings other than door openings the same as required for door openings unless otherwise indicated. Install framing below sills of openings to match framing required above door heads.
4. Fire-Resistance-Rated Partitions: Install framing to comply with fire-resistance-rated assembly indicated and support closures and to make partitions continuous from floor to underside of solid structure.

   a. Firestop Track: Where indicated, install to maintain continuity of fire-resistance-rated assembly indicated.

5. Sound-Rated Partitions: Install framing to comply with sound-rated assembly indicated.

D. Direct Furring:
1. Attach to concrete or masonry with stub nails, screws designed for masonry attachment, or powder-driven fasteners spaced 24 inches (610 mm) o.c.

E. Z-Shaped Furring Members:

1. Erect insulation, specified in Section 072100 "Thermal Insulation," vertically and hold in place with Z-shaped furring members spaced 24 inches (610 mm) <Insert dimension> o.c.
2. Except at exterior corners, securely attach narrow flanges of furring members to wall with concrete stub nails, screws designed for masonry attachment, or powder-driven fasteners spaced 24 inches (610 mm) o.c.
3. At exterior corners, attach wide flange of furring members to wall with short flange extending beyond corner; on adjacent wall surface, screw-attach short flange of furring channel to web of attached channel. At interior corners, space second member no more than 12 inches (305 mm) from corner and cut insulation to fit.

F. Installation Tolerance: Install each framing member so fastening surfaces vary not more than 1/8 inch (3 mm) from the plane formed by faces of adjacent framing.

Copyright 2014 AIA MasterSpec Premium

3.5 INSTALLING SUSPENSION SYSTEMS

A. Install suspension system components according to spacings indicated, but not greater than spacings required by referenced installation standards for assembly types.

1. Hangers: 48 inches (1219 mm) o.c.
2. Carrying Channels (Main Runners): 48 inches (1219 mm) o.c.
3. Furring Channels (Furring Members): 16 inches (406 mm) o.c.

B. Isolate suspension systems from building structure where they abut or are penetrated by building structure to prevent transfer of loading imposed by structural movement.

C. Suspend hangers from building structure as follows:

1. Install hangers plumb and free from contact with insulation or other objects within ceiling plenum that are not part of supporting structural or suspension system.

   a. Splay hangers only where required to miss obstructions and offset resulting horizontal forces by bracing, counters playing, or other equally effective means.

2. Where width of ducts and other construction within ceiling plenum produces hanger spacings that interfere with locations of hangers required to support standard suspension system members, install supplemental suspension members and hangers in the form of trapezes or equivalent devices.

3. Wire Hangers: Secure by looping and wire tying, either directly to structures or to inserts, eye screws, or other devices and fasteners that are secure and appropriate for substrate, and in a manner that will not cause hangers to deteriorate or otherwise fail.
4. Flat Hangers: Secure to structure, including intermediate framing members, by attaching to inserts, eye screws, or other devices and fasteners that are secure and appropriate for structure and hanger, and in a manner that will not cause hangers to deteriorate or otherwise fail.
5. Do not attach hangers to steel roof deck.
6. Do not attach hangers to permanent metal forms. Furnish cast-in-place hanger inserts that extend through forms.
7. Do not attach hangers to rolled-in hanger tabs of composite steel floor deck.
8. Do not connect or suspend steel framing from ducts, pipes, or conduit.

D. Seismic Bracing: Sway-brace suspension systems with hangers used for support As required by the Montgomery county building code.

E. Installation Tolerances: Install suspension systems that are level to within 1/8 inch in 12 feet (3 mm in 3.6 m) measured lengthwise on each member that will receive finishes and transversely between parallel members that will receive finishes.

END OF SECTION 092216

Copyright 2014 AIA MasterSpec Premium

SECTION 096513 - RESILIENT BASE AND ACCESSORIES

PART 1 - GENERAL

1.1 RELATED DOCUMENTS

A. Drawings and general provisions of the Contract, including General and Supplementary Conditions and Division 01 Specification Sections, apply to this Section.

1.2 SUMMARY

A. Section Includes:

1. Resilient base.

1.3 ACTION SUBMITTALS

A. Product Data: For each type of product.

B. Sustainable Design Submittals:

C. Samples: For each exposed product and for each color and texture specified, not less than 12 inches (300 mm) long.

D. Product Schedule: For resilient base and accessory products. Use same designations indicated on Drawings. See drawings

1.4 MAINTENANCE MATERIAL SUBMITTALS

A. Furnish extra materials that match products installed and that are packaged with protective covering for storage and identified with labels describing contents.

1. Furnish not less than 10 linear feet (3 linear m of each type, color, pattern, and size of resilient product installed.

1.5 QUALITY ASSURANCE

A. Mockups:

1. Coordinate mockups in this Section with mockups specified in other Sections.

Copyright 2014 AIA MasterSpec Premium

1.6 DELIVERY, STORAGE, AND HANDLING

A. Store resilient products and installation materials in dry spaces protected from the weather, with ambient temperatures maintained within range recommended by manufacturer, but not less than 50 deg F (10 deg C) or more than 90 deg F (32 deg C).

1.7 FIELD CONDITIONS

A. Maintain ambient temperatures within range recommended by manufacturer, but not less than 70 deg F (21 deg Cor more than 95 deg F (35 deg C, in spaces to receive resilient products during the following time periods:

1. 48 hours before installation.
2. During installation.
3. 48 hours after installation.

B. After installation and until Substantial Completion, maintain ambient temperatures within range recommended by manufacturer.

C. Install resilient products after other finishing operations, including painting, have been completed.

PART 2 - PRODUCTS

2.1 PERFORMANCE REQUIREMENTS

A. <Double click to insert sustainable design text for low-emitting resilient base and accessories.>

2.2 THERMOSET-RUBBER BASE <Insert drawing designation>

A. Product Standard: ASTM F 1861, Type TS (rubber, vulcanized thermoset), Group I (solid, homogeneous).

1. Style and Location:

a. Style A, Straight: Provide in areas with carpet <Insert requirements>.
b. Style B, Cove: Provide in areas with resilient flooring<Insert requirements>.

B. Thickness: 0.125 inch (3.2 mm).

C. Height: As indicated on Drawings.

D. Lengths: Coils in manufacturer's standard length.

E. Outside Corners: Job formed or preformed.

Copyright 2014 AIA MasterSpec Premium

G. Inside Corners: Job formed or preformed.

H. Colors: As shown on drawings

2.3 INSTALLATION MATERIALS

A. Trowelable Leveling and Patching Compounds: Latex-modified, portland cement based or blended hydraulic-cement-based formulation provided or approved by resilient-product manufacturer for applications indicated.

B. Adhesives: Water-resistant type recommended by resilient-product manufacturer for resilient products and substrate conditions indicated.

PART 3 - EXECUTION

3.1 EXAMINATION

A. Examine substrates, with Installer present, for compliance with requirements for maximum moisture content and other conditions affecting performance of the Work.

1. Verify that finishes of substrates comply with tolerances and other requirements specified in other Sections and that substrates are free of cracks, ridges, depressions, scale, and foreign deposits that might interfere with adhesion of resilient products.

B. Proceed with installation only after unsatisfactory conditions have been corrected.

1. Installation of resilient products indicates acceptance of surfaces and conditions.

3.2 PREPARATION

A. Prepare substrates according to manufacturer's written instructions to ensure adhesion of resilient products.

B. Fill cracks, holes, and depressions in substrates with trowelable leveling and patching compound; remove bumps and ridges to produce a uniform and smooth substrate.

C. Do not install resilient products until they are the same temperature as the space where they are to be installed.

1. At least 48 hours in advance of installation, move resilient products and installation materials into spaces where they will be installed.

D. Immediately before installation, sweep and vacuum clean substrates to be covered by resilient products.

Copyright 2014 AIA MasterSpec Premium

3.3 RESILIENT BASE INSTALLATION

A. Comply with manufacturer's written instructions for installing resilient base.

B. Apply resilient base to walls, columns, pilasters, casework and cabinets in toe spaces, and other permanent fixtures in rooms and areas where base is required.

C. Install resilient base in lengths as long as practical without gaps at seams and with tops of adjacent pieces aligned.

D. Tightly adhere resilient base to substrate throughout length of each piece, with base in continuous contact with horizontal and vertical substrates.

E. Do not stretch resilient base during installation.

F. On masonry surfaces or other similar irregular substrates, fill voids along top edge of resilient base with manufacturer's recommended adhesive filler material.

G. Preformed Corners: Install preformed corners before installing straight pieces.

H. Job-Formed Corners:

1. Outside Corners: Use straight pieces of maximum lengths possible and form with returns not less than 3 inches (76 mm) in length.

   a. Form without producing discoloration (whitening) at bends.

2. Inside Corners: Use straight pieces of maximum lengths possible and form with returns not less than 3 inches (76 mm) in length.

   a. Miter or cope corners to minimize open joints.

3.4 RESILIENT ACCESSORY INSTALLATION

A. Comply with manufacturer's written instructions for installing resilient accessories.

B. Resilient Molding Accessories: Butt to adjacent materials and tightly adhere to substrates throughout length of each piece. Install reducer strips at edges of floor covering that would otherwise be exposed.

3.5 CLEANING AND PROTECTION

A. Comply with manufacturer's written instructions for cleaning and protecting resilient products.

B. Perform the following operations immediately after completing resilient-product installation:

1. Remove adhesive and other blemishes from exposed surfaces.
2. Sweep and vacuum horizontal surfaces thoroughly.
3. Damp-mop horizontal surfaces to remove marks and soil.

Copyright 2014 AIA MasterSpec Premium

C. Protect resilient products from mars, marks, indentations, and other damage from construction operations and placement of equipment and fixtures during remainder of construction period.

D. Cover resilient products subject to wear and foot traffic until Substantial Completion.

END OF SECTION 096513

Copyright 2014 AIA MasterSpec Premium

SECTION 096519 - RESILIENT TILE FLOORING

PART 1 - GENERAL

1.1 RELATED DOCUMENTS

A. Drawings and general provisions of the Contract, including General and Supplementary Conditions and Division 01 Specification Sections, apply to this Section.

1.2 SUMMARY

A. Section Includes:

1. Solid vinyl floor tile.
2. Vinyl composition floor tile.

1.3 ACTION SUBMITTALS

A. Product Data: For each type of product.

B. Shop Drawings: For each type of floor tile. Include floor tile layouts, edges, columns, doorways, enclosing partitions, built-in furniture, cabinets, and cutouts.

1. Show details of special patterns.

C. Samples: Full-size units of each color and pattern of floor tile required.

1.4 INFORMATIONAL SUBMITTALS

A. Qualification Data: For Installer.

1.5 CLOSEOUT SUBMITTALS

A. Maintenance Data: For each type of floor tile to include in maintenance manuals.

1.6 MAINTENANCE MATERIAL SUBMITTALS

A. Furnish extra materials that match products installed and that are packaged with protective covering for storage and identified with labels describing contents.

Copyright 2014 AIA MasterSpec Premium

1. Floor Tile: Furnish one extra box, of each type, color, and pattern of floor tile installed. As requested by the Cor.

1.7 QUALITY ASSURANCE

A. Installer Qualifications: A qualified installer who employs workers for this Project who are competent in techniques required by manufacturer for floor tile installation and seaming method indicated.

B. Mockups

1. Build mockups for floor tile including resilient base and accessories.

   a. Size: Minimum 16 sq. ft. for each type, color, and pattern in locations directed by Cor.

2. Approval of mockups does not constitute approval of deviations from the Contract Documents contained in mockups unless Architect specifically approves such deviations in writing.
3. Subject to compliance with requirements, approved mockups may become part of the completed Work if undisturbed at time of Substantial Completion.

1.8 DELIVERY, STORAGE, AND HANDLING

A. Store floor tile and installation materials in dry spaces protected from the weather, with ambient temperatures maintained within range recommended by manufacturer, but not less than 50 deg F (10 deg C) or more than 90 deg F (32 deg C). Store floor tiles on flat surfaces.

1.9 FIELD CONDITIONS

A. Maintain ambient temperatures within range recommended by manufacturer, but not less than 70 deg F (21 deg C) or more than 95 deg F (35 deg C) , in spaces to receive floor tile during the following time periods:

1. 48 hours before installation.
2. During installation.
3. 48 hours after installation.

B. After installation and until Substantial Completion, maintain ambient temperatures within range recommended by manufacturer, but not less than 55 deg F (13 deg C) or more than 95 deg F (35 deg C) .

C. Close spaces to traffic during floor tile installation.

D. Close spaces to traffic for 48 hours after floor tile installation.

E. Install floor tile after other finishing operations, including painting, have been completed.

Copyright 2014 AIA MasterSpec Premium

PART 2 - PRODUCTS

2.1 PERFORMANCE REQUIREMENTS

A. Fire-Test-Response Characteristics: For resilient tile flooring, as determined by testing identical products according to ASTM E 648 or NFPA 253 by a qualified testing agency.

B.

2.2 SOLID VINYL FLOOR TILE

A. Tile Standard: ASTM F 1700.

1. Class: As indicated by product designations Class I, monolithic vinyl tile Class II, surface-decorated vinyl tile Class III, printed film vinyl tile].
2. Type: A, smooth surface B, embossed surface.

B. Thickness: 0.080 inch (2.0 mm) 0.100 inch (2.5 mm) 0.120 inch (3.0 mm) 0.125 inch (3.2 mm) <Insert dimension>.

C. Size: 12 by 12 inches (305 by 305 mm) 18 by 18 inches (457 by 457 mm) 24 by 24 inches (610 by 610 mm) 36 by 36 inches (914 by 914 mm) 3 by 36 inches (76 by 914 mm) <Insert dimensions>.

D. Colors and Patterns: As indicated by manufacturer's designations Match Architect's sample As selected by Architect from full range of industry colors.

2.3 VINYL COMPOSITION FLOOR TILE <Insert drawing designation>

A. Tile Standard: ASTM F 1066, Class 1, solid-color or Class 2, through-pattern See schedule.

B. Wearing Surface: Smooth.

C. Thickness: 0.125 inch (3.2 mm).

D. Size: 12 by 12 inches (305 by 305 mm).

E. Colors and Patterns: As indicated by manufacturer's designations Match Architect's sample As selected by Architect from full range of industry colors.

Copyright 2014 AIA MasterSpec Premium

2.4 INSTALLATION MATERIALS

A. Trowelable Leveling and Patching Compounds: Latex-modified, portland cement based or blended hydraulic-cement-based formulation provided or approved by floor tile manufacturer for applications indicated.

B. Adhesives: Water-resistant type recommended by floor tile and adhesive manufacturers to suit floor tile and substrate conditions indicated.

C. Seamless-Installation Accessories:

1. Heat-Welding Bead: Manufacturer's solid-strand product for heat welding seams.

a. Color: As selected by Architect from manufacturer's full range to contrast with floor tile Match floor tile.

2. Chemical-Bonding Compound: Manufacturer's product for chemically bonding seams.

D. Floor Polish: Provide protective, liquid floor-polish products recommended by floor tile manufacturer.

E. Joint Sealant for Resilient Terrazzo Floor Tile: Silicone sealant of type and grade recommended in writing by floor tile manufacturer to suit resilient terrazzo floor tile.

1. Joint-Sealant Color: White As selected by Architect from manufacturer's full range to match floor tile Match floor tile.

F. Sealers and Finish Coats for Resilient Terrazzo Floor Tile: Products recommended by floor tile manufacturer for resilient terrazzo floor tile.

PART 3 - EXECUTION

3.1 EXAMINATION

A. Examine substrates, with Installer present, for compliance with requirements for maximum moisture content and other conditions affecting performance of the Work.

1. Verify that finishes of substrates comply with tolerances and other requirements specified in other Sections and that substrates are free of cracks, ridges, depressions, scale, and foreign deposits that might interfere with adhesion of floor tile.

Copyright 2014 AIA MasterSpec Premium

B. Proceed with installation only after unsatisfactory conditions have been corrected.

3.2 PREPARATION

A. Prepare substrates according to floor tile manufacturer's written instructions to ensure adhesion of resilient products.

B. Concrete Substrates: Prepare according to ASTM F 710.

1. Verify that substrates are dry and free of curing compounds, sealers, and hardeners.
2. Remove substrate coatings and other substances that are incompatible with adhesives and that contain soap, wax, oil, or silicone, using mechanical methods recommended by floor tile manufacturer. Do not use solvents.

C. Fill cracks, holes, and depressions in substrates with trowelable leveling and patching compound; remove bumps and ridges to produce a uniform and smooth substrate.

D. Do not install floor tiles until they are the same temperature as the space where they are to be installed.

1. At least 48 hours in advance of installation, move resilient floor tile and installation materials into spaces where they will be installed.

E. Immediately before installation, sweep and vacuum clean substrates to be covered by resilient floor tile.

3.3 FLOOR TILE INSTALLATION

A. Comply with manufacturer's written instructions for installing floor tile.

B. Lay out floor tiles from center marks established with principal walls, discounting minor offsets, so tiles at opposite edges of room are of equal width. Adjust as necessary to avoid using cut widths that equal less than one-half tile at perimeter.

C. Match floor tiles for color and pattern by selecting tiles from cartons in the same sequence as manufactured and packaged, if so numbered. Discard broken, cracked, chipped, or deformed tiles.

D. Scribe, cut, and fit floor tiles to butt neatly and tightly to vertical surfaces and permanent fixtures including built-in furniture, cabinets, pipes, outlets, and door frames.

E. Extend floor tiles into toe spaces, door reveals, closets, and similar openings. Extend floor tiles to center of door openings.

F. Maintain reference markers, holes, and openings that are in place or marked for future cutting by repeating on floor tiles as marked on substrates. Use chalk or other nonpermanent marking device.

G. Install floor tiles on covers for telephone and electrical ducts, building expansion-joint covers, and similar items in finished floor areas. Maintain overall continuity of color and pattern

Copyright 2014 AIA MasterSpec Premium

between pieces of tile installed on covers and adjoining tiles. Tightly adhere tile edges to substrates that abut covers and to cover perimeters.

H. Adhere floor tiles to flooring substrates using a full spread of adhesive applied to substrate to produce a completed installation without open cracks, voids, raising and puckering at joints, telegraphing of adhesive spreader marks, and other surface imperfections.

3.4 CLEANING AND PROTECTION

A. Comply with manufacturer's written instructions for cleaning and protecting floor tile.

B. Perform the following operations immediately after completing floor tile installation:

1. Remove adhesive and other blemishes from exposed surfaces.
2. Sweep and vacuum surfaces thoroughly.
3. Damp-mop surfaces to remove marks and soil.

C. Protect floor tile from mars, marks, indentations, and other damage from construction operations and placement of equipment and fixtures during remainder of construction period.

D. Floor Polish: Remove soil, adhesive, and blemishes from floor tile surfaces before applying liquid floor polish.

1. Sealer: Apply two base coats of liquid sealer.
2. Finish: Apply According to tile manufacturer’s instructions <Insert requirements> coats of liquid floor finish.

E. Cover floor tile until Substantial Completion.

END OF SECTION 096519

Copyright 2014 AIA MasterSpec Premium

SECTION 123216 - MANUFACTURED PLASTIC-LAMINATE-FACED CASEWORK

PART 1 - GENERAL

1.1 RELATED DOCUMENTS

A. Drawings and general provisions of the Contract, including General and Supplementary Conditions and Division 01 Specification Sections, apply to this Section.

1.2 SUMMARY

A. Section includes plastic-laminate-faced cabinets of stock design.

B. Related Requirements:

1. Section 061000 "Rough Carpentry" Section 061053 "Miscellaneous Rough Carpentry" for wood blocking for anchoring casework.
2. Section 092216 "Non-Structural Metal Framing" for reinforcements in metal-framed partitions for anchoring casework.
3. Section 096513 "Resilient Base and Accessories" for resilient base applied to plastic-laminate-faced casework.
4. Section 123553.16 "Plastic-Laminate Laboratory Casework."
5. Section 123623.13 "Plastic-Laminate-Clad Countertops."

1.3 DEFINITIONS

A. Definitions in the AWI's, AWMAC's, and WI's "Architectural Woodwork Standards" apply to the work of this Section.

B. MDF: Medium-density fiberboard.

C. Hardwood Plywood: A panel product composed of layers or plies of veneer, or of veneers in combination with lumber core, hardboard core, MDF core, or particleboard core, joined with adhesive, and faced both front and back with hardwood veneers.

1.4 PREINSTALLATION MEETINGS

A. Preinstallation Conference: Conduct conference at Casey Community Center.

B. Keying Conference: Conduct conference at Casey Community Center. Incorporate keying conference decisions into final keying requirements.

Copyright 2014 AIA MasterSpec Premium

1.5 COORDINATION

A. Coordinate sizes and locations of framing, blocking, furring, reinforcements, and other related units of Work specified in other Sections to ensure that casework can be supported and installed as indicated.

1.6 ACTION SUBMITTALS

A. Product Data: For each type of product.

B. Sustainable Design Submittals:

C. Shop Drawings: Include plans, elevations, sections, details, and attachments to other work. Show fabrication details, including types and locations of hardware. Show installation details, including field joints and filler panels. Indicate manufacturer's catalog numbers for casework.

D. Keying Schedule: Include schematic keying diagram and index each key set to unique designations that are coordinated with the Contract Documents.

E. Samples: For cabinet finishes.

F. Samples for Initial Selection: For cabinet finishes.

G. Samples for Verification: 8-by-10-inch (200-by-250-mm) Samples for each type of finish. and the following:

1. One full-size finished base cabinet complete with hardware, doors, and drawers.
2. One full-size finished wall cabinet complete with hardware, doors, and adjustable shelves.
3. Maintain full-size Samples at Project site during construction in an undisturbed condition as a standard for judging the completed Work. Unless otherwise indicated, approved sample units may become part of the completed Work if in undisturbed condition at time of Substantial Completion. Notify Architect of their exact locations.

1.7 INFORMATIONAL SUBMITTALS

A. Qualification Data: For Installer.

B. Quality Standard Compliance Certificates: AWI Quality Certification WI Certified Compliance Program certificates.

C. Sample Warranty: For special warranty.

Copyright 2014 AIA MasterSpec Premium

1.8 QUALITY ASSURANCE

A. Installer Qualifications: An authorized representative who is trained and approved by manufacturer for installation of units required for this Project and who is a certified participant in AWI's Quality Certification Program a licensee of WI's Certified Compliance Program.

1.9 DELIVERY, STORAGE, AND HANDLING

A. Deliver casework only after painting, utility roughing-in, and similar operations that could damage, soil, or deteriorate casework have been completed in installation areas. If casework must be stored in other than installation areas, store only in areas where environmental conditions meet requirements specified in "Project Conditions" Article.

B. Keep finished surfaces covered with polyethylene film or other protective covering during handling and installation.

1.10 FIELD CONDITIONS

A. Environmental Limitations: Do not deliver or install casework until building is enclosed, wet work is complete, and HVAC system is operating and maintaining temperature and relative humidity at occupancy levels during the remainder of the construction period. Maintain temperature and relative humidity during the remainder of the construction period in range recommended for Project location by the AWI's, AWMAC's, and WI's "Architectural Woodwork Standards."

B. Established Dimensions: Where casework is indicated to fit to other construction, establish dimensions for areas where woodwork is to fit. Provide allowance for trimming at site, and coordinate construction to ensure that actual dimensions correspond to established dimensions.

C. Locate concealed framing, blocking, and reinforcements that support casework by field measurements before being enclosed, and indicate measurements on Shop Drawings.

1.11 WARRANTY

A. Special Warranty: Manufacturer agrees to repair or replace components of casework that fail in materials or workmanship within specified warranty period.

1. Failures include, but are not limited to, the following:

   a. Delamination of components or other failures of glue bond.
   b. Warping of components.
   c. Failure of operating hardware.

2. Warranty Period: Five years from date of Substantial Completion.

Copyright 2014 AIA MasterSpec Premium

PART 2 - PRODUCTS

2.1 MANUFACTURERS

A. Source Limitations: Obtain plastic-laminate-faced cabinets from single manufacturer.

2.2 CASEWORK, GENERAL

A. Quality Standard: Unless otherwise indicated, comply with the AWI's, AWMAC's, and WI's "Architectural Woodwork Standards" for grades of casework indicated for construction, finishes, installation, and other requirements.

1. Grade: Premium, Custom, Economy.
2. Provide labels and certificates from AWI WI certification program indicating that casework, including installation, complies with requirements of grades specified.

B. Product Designations: Drawings indicate sizes, configurations, and finish materials of manufactured plastic-laminate-faced cabinets by referencing designated manufacturer's catalog numbers. Other manufacturers' casework of similar sizes and door and drawer configurations, of same finish materials, and complying with the Specifications may be considered. See Section 016000 "Product Requirements."

C. Product Designations: Drawings indicate configurations of manufactured plastic-laminate-faced cabinets by referencing designations of Casework Design Series numbering system in Appendix A of the AWI's, AWMAC's, and WI's "Architectural Woodwork Standards."

2.3 CASEWORK

A. Design:

1. Lipped overlay with radiused wood edges and full-width, recessed finger pulls machined into faces of doors and drawers.
2. Reveal overlay with recessed finger pulls machined into faces of doors and drawers.
3. Flush overlay.

B. Grain Direction for Wood Grain Plastic Laminate:

1. Vertical on both doors and drawer fronts, with continuous vertical matching.
2. Vertical on doors, horizontal on drawer fronts.
3. Lengthwise on face frame members.
4. Vertical on end panels.
5. Side to side on bottoms and tops of units.
6. Vertical on knee-space panels.

Copyright 2014 AIA MasterSpec Premium

7. Horizontal on aprons.

C. Exposed Materials:

1. Plastic Laminate: Grade HGS, Grade HGL, Grade VGS.

   a. Colors and Patterns: As indicated by manufacturer's designations Match Architect's sample As selected by Architect from manufacturer's full range.

2. Unless otherwise indicated, provide specified edgebanding on all exposed edges.
3. Solid Wood: Clear hardwood lumber of species indicated, selected for compatible grain and color.
4. Wood Species: Red oak, White birch, Alder, White maple, Hickory, Cherry.

D. Semiexposed Materials:

1. Plastic Laminate: Grade VGS, Grade CLS unless otherwise indicated. Provide plastic laminate for semiexposed surfaces unless otherwise indicated.

   a. Provide plastic laminate of same grade as exposed surfaces for interior faces of doors and drawer fronts and other locations where opposite side of component is exposed.

2. Thermoset Decorative Panels: Provide thermoset decorative panels for semiexposed surfaces unless otherwise indicated.

   a. Provide plastic laminate of same grade as exposed surfaces for interior faces of doors and drawer fronts and other locations where opposite side of component is exposed.

3. Hardboard: Use only for cabinet backs where exterior side of back is not exposed.
4. Metal for Steel Drawer Pans: Cold-rolled, carbon-steel sheet complying with ASTM A 1008/A 1008M; matte finish; suitable for exposed applications.
5. Unless otherwise indicated, provide specified edgebanding on all semiexposed edges.

E. Concealed Materials:

1. Solid Wood: Any hardwood or softwood species, with no defects affecting strength or utility.
2. Plywood: Hardwood plywood.
3. Plastic Laminate: Grade BKL.
4. Particleboard.
5. MDF.
6. Hardboard.

2.4 MATERIALS

A. Maximum Moisture Content for Lumber: 7 percent for hardwood and 12 percent for softwood.

Copyright 2014 AIA MasterSpec Premium

C. Hardwood Plywood: HPVA HP-1, particleboard core except where veneer core is indicated.

D. Softwood Plywood: DOC PS 1.

E. Particleboard: ANSI A208.1, Grade M-2.

F. Particleboard: Straw-based particleboard complying with ANSI A208.1, Grade M-2, except for density.

G. MDF: ANSI A208.2, Grade 130.

H. Hardboard: ANSI A135.4, Class 1 Tempered.

I. Plastic Laminate: High-pressure decorative laminate complying with NEMA LD 3.

J. Edgebanding for Plastic Laminate: Plastic laminate matching adjacent surfaces Rigid PVC extrusions, through color with satin finish, 3 mm thick at doors and drawer fronts, 1 mm thick elsewhere.

K. Thermoset Decorative Panels: Particleboard or medium-density fiberboard finished with thermally fused, melamine-impregnated decorative paper and complying with requirements of NEMA LD 3, Grade VGL, for Test Methods 3.3, 3.4, 3.6, 3.8, and 3.10.

L. Edgebanding for Thermoset Decorative Panels: PVC or polyester edgebanding matching thermoset decorative panels.

M. Glass for Glazed Doors: Clear float glass complying with ASTM C 1036, Type I, Class 1, Quality-Q3; not less than 5.0 mm 6.0 mm thick.

N. Glass for Glazed Doors: Clear tempered glass complying with ASTM C 1048, Kind FT, Condition A, Type I, Class 1, Quality-Q3; not less than 5.0 mm thick.

O. Glass for Glazed Doors: Clear laminated tempered glass complying with ASTM C 1172, Kind LT, Condition A, Type I, Class I, Quality-Q3; with two plies not less than 3.0 mm thick and with clear, polyvinyl butyral interlayer.

P. Frameless Glass Doors: Clear tempered glass complying with ASTM C 1048, Kind FT, Condition A, Type I, Class 1, Quality-Q3; not less than 5.0 mm, 6.0 mm thick; with exposed edges seamed before tempering.

2.5 COLORS AND FINISHES

A. Wood Colors and Finishes: As indicated by manufacturer's designations Match Architect's sample As selected by Architect from casework manufacturer's full range.

B. Thermoset Decorative Panel Colors, Patterns, and Finishes: As indicated by manufacturer's designations As selected by Architect from casework manufacturer's full range As selected by Architect from thermoset decorative panel manufacturer's full range As selected by Architect from thermoset decorative panel manufacturer's full range of solid colors As selected by Architect from thermoset decorative panel manufacturer's full range of wood-grain patterns.

Copyright 2014 AIA MasterSpec Premium

C. Plastic-Laminate Colors, Patterns, and Finishes: As indicated by manufacturer's designations As selected by Architect from casework manufacturer's full range As selected by Architect from plastic-laminate manufacturer's full range As selected by Architect from plastic-laminate manufacturer's full range of solid colors As selected by Architect from plastic-laminate manufacturer's full range of wood-grain patterns.

D. PVC Edgebanding Color: Casework manufacturer's standard As selected from casework manufacturer's full range.

2.6 FABRICATION

A. Plastic-Laminate-Faced Cabinet Construction: As required by referenced quality standard, but not less than the following:

1. Bottoms and Ends of Cabinets, and Tops of Wall Cabinets and Tall Cabinets: 3/4-inch particleboard.
2. Shelves: 3/4-inchthick particleboard 3/4-inch- thick plywood or 1-inch- thick particleboard].
3. Backs of Cabinets: 1/2-inch- thick particleboard or MDF where exposed, 1/4-inch hardboard 1/4-inch veneer-core hardwood plywood dadoed into sides, bottoms, and tops where not exposed.
4. Drawer Fronts: 3/4-inch particleboard.
5. Drawer Sides and Backs: 1/2-inch solid-wood or veneer-core hardwood plywood [particleboard or MDF], with glued dovetail or multiple-dowel joints.
6. Drawer Bottoms: 1/4-inch hardwood plywood particleboard or MDF glued and dadoed into front, back, and sides of drawers. Use 1/2-inch material for drawers more than 24 inches wide.
7. Drawer Bodies: Steel drawer pans formed from 0.0359-inch- thick metal, metallic phosphate treated, and finished with manufacturer's standard two-coat, baked-enamel finish consisting of prime coat and thermosetting topcoat with a minimum dry film thickness of 1 mil for topcoat and 2 mils for system.
8. Doors 48 Inches High or Less: 3/4 inch thick, with particleboard or MDF cores and solid-wood stiles and rails.
9. Doors More Than 48 Inches High: 1-1/16 inches thick, with honeycomb cores and solid hardwood stiles and rails.
10. Doors More Than 48 Inches High: 1-1/8 inches thick, with particleboard cores.
11. Stiles and Rails of Glazed Doors 48 Inches High or Less: 3/4 inch thick, with particleboard cores.
12. Stiles and Rails of Glazed Doors More Than 48 Inches High: 1-1/16-inch- thick, with solid wood cores.
13. Stiles and Rails of Glazed Doors More Than 48 Inches High: 1-1/8 inches thick, with particleboard cores.

B. Filler Strips: Provide as needed to close spaces between cabinets and walls, ceilings, and indicated equipment. Fabricate from same material and with same finish as cabinets.

Copyright 2014 AIA MasterSpec Premium

2.7 CASEWORK HARDWARE AND ACCESSORIES

A. Hardware, General: Unless otherwise indicated, provide manufacturer's standard satin-finish mirror polished-finish powder-coated, commercial-quality, heavy-duty hardware.

1. Use threaded metal or plastic inserts with machine screws for fastening to particleboard except where hardware is through-bolted from back side.

B. Butt Hinges: Stainless-steel Chrome-plated Powder-coated, semiconcealed, five-knuckle hinges complying with BHMA A156.9, Grade 1, with antifriction bearings and rounded tips. Provide two hinges for doors less than 48 inches high, and provide three hinges for doors more than 48 inches high.

C. Frameless Concealed Hinges (European Type): BHMA A156.9, Type B01602, 100 135 170degrees of opening, self-closing. Provide two hinges for doors less than 48 inches high, and provide three hinges for doors more than 48 inches high.

D. Pulls: Solid nylon aluminum stainless-steel or chrome-plated brass wire pulls, fastened from back with two screws. For sliding doors, provide recessed stainless-steel or chrome-plated flush pulls. Provide two pulls for drawers more than 24 inches wide.

E. Pulls: Semirecessed plastic pulls. For sliding doors, provide recessed plastic flush-pulls. Provide two pulls for drawers more than 24 inches wide.

F. Door Catches: Zinc-plated Powder-coated, nylon-roller spring catch or dual, self-aligning, permanent magnet catch. Provide two catches on doors more than 48 inches high.

G. Drawer Slides: BHMA A156.9, Type B05091.

1. Standard Duty (Grades 1, 2, and 3): Side mounted and extending under bottom edge of drawer; full partial-extension type; zinc-plated epoxy-coated steel with polymer rollers.
2. Heavy Duty (Grade 1HD-100 and Grade 1HD-200): Side mounted; full full-overtravel-extension type; zinc-plated, steel ball-bearing slides.
3. Box Drawer Slides: Grade 1 Grade 1HD-100], for drawers not more than 6 inches high and 24 inches wide.
4. File Drawer Slides: Grade 1HD-100 Grade 1HD-200, for drawers more than 6 inches high or 24 inches wide.
5. Pencil Drawer Slides: Grade 1 Grade 2, for drawers not more than 3 inches high and 24 inches wide.
6. Keyboard Slides: Grade 1 Grade 1HD-100, for computer keyboard shelves.
7. Trash Bin Slides: Grade 1HD-100 Grade 1HD-200, for trash bins not more than 20 inches high and 16 inches wide.

H. Label Holders: Stainless steel or chrome plated, sized to receive standard label cards approximately 1 by 2 inches, attached with screws or brads.

1. Provide label holders where indicated on all drawers.

I. Drawer and Hinged Door Locks: Cylindrical (cam) Mortise type, five-pin tumbler, brass with chrome-plated finish, and complying with BHMA A156.11, Grade 1.

Copyright 2014 AIA MasterSpec Premium

1. Provide a minimum of two keys per lock and six master keys.
2. Provide locks where indicated on all doors and drawers.

J. Sliding-Door Hardware Sets: Manufacturer's standard, to suit type and size of sliding-door units.

K. Adjustable Shelf Supports: Two-pin locking plastic shelf rests complying with BHMA A156.9, Type B04013 Single-pin metal shelf rests complying with BHMA A156.9, Type B04013.

L. Adjustable Shelf Supports: Mortise-type, zinc-plated powder-coated steel standards and shelf rests complying with BHMA A156.9, Types B04071 and B04091.

PART 3 - EXECUTION

3.1 EXAMINATION

A. Examine areas, with Installer present, for compliance with requirements for installation tolerances, location of framing and reinforcements, and other conditions affecting performance of the Work.

B. Proceed with installation only after unsatisfactory conditions have been corrected.

3.2 CASEWORK INSTALLATION

A. Grade: Install cabinets to comply with same grade as item to be installed.

B. Install casework level, plumb, and true; shim as required, using concealed shims. Where casework abuts other finished work, apply filler strips and scribe for accurate fit, with fasteners concealed where practical.

C. Base Cabinets: Set cabinets straight, level, and plumb. Adjust subtops within 1/16 inch of a single plane. Align similar adjoining doors and drawers to a tolerance of 1/16 inch. Bolt adjacent cabinets together with joints flush, tight, and uniform.

D. Wall Cabinets: Hang cabinets straight, level, and plumb. Adjust fronts and bottoms within 1/16 inch of a single plane. Fasten to hanging strips, masonry, framing, wood blocking, or reinforcements in walls and partitions. Align similar adjoining doors to a tolerance of 1/16 inch.

E. Fasten cabinets to adjacent cabinets and to masonry, framing, wood blocking, or reinforcements in walls and partitions to comply with the AWI's, AWMAC's, and WI's "Architectural Woodwork Standards."

F. Install hardware uniformly and precisely. Set hinges snug and flat in mortises unless otherwise indicated. Adjust and align hardware so moving parts operate freely and contact points meet accurately. Allow for final adjustment after installation.

G. Adjust casework and hardware so doors and drawers operate smoothly without warp or bind. Lubricate operating hardware as recommended by manufacturer.

Copyright 2014 AIA MasterSpec Premium

3.3 CLEANING

A. Repair or remove and replace defective work as directed on completion of installation.

B. Clean finished surfaces, touch up as required, and remove or refinish damaged or soiled areas to match original factory finish, as approved by Architect.

END OF SECTION 123216

Copyright 2010 AIA MasterSpec Premium

SECTION 220719 - PLUMBING PIPING INSULATION

PART 1 - GENERAL

1.1 RELATED DOCUMENTS

A. Drawings and general provisions of the Contract, including General and Supplementary Conditions and Division 01 Specification Sections, apply to this Section.

1.2 SUMMARY

A. Section includes insulating the following plumbing piping services:

1. Domestic cold-water piping.
2. Domestic hot-water piping.

1.3 ACTION SUBMITTALS

A. Product Data: For each type of product indicated. Include thermal conductivity, water-vapor permeance thickness, and jackets (both factory- and field-applied, if any).

1.4 INFORMATIONAL SUBMITTALS

A. Qualification Data: For qualified Installer.

B. Material Test Reports: From a qualified testing agency acceptable to authorities having jurisdiction indicating, interpreting, and certifying test results for compliance of insulation materials, sealers, attachments, cements, and jackets, with requirements indicated. Include dates of tests and test methods employed.

C. Field quality-control reports.

PART 2 - PRODUCTS

2.1 INSULATION MATERIALS

A. Comply with requirements in "Piping Insulation Schedule, General," "Indoor Piping Insulation Schedule," "Outdoor, Aboveground Piping Insulation Schedule," and "Outdoor, Underground Piping Insulation Schedule" articles for where insulating materials shall be applied.

B. Products shall not contain asbestos, lead, mercury, or mercury compounds.

C. Products that come in contact with stainless steel shall have a leachable chloride content of less than 50 ppm when tested according to ASTM C 871.

Copyright 2010 AIA MasterSpec Premium

D. Insulation materials for use on austenitic stainless steel shall be qualified as acceptable according to ASTM C 795.

E. Foam insulation materials shall not use CFC or HCFC blowing agents in the manufacturing process. See Editing Instruction No. 1 in the Evaluations for cautions about naming manufacturers and products. See Section 016000 "Product Requirements."

F. Flexible Elastomeric Insulation: Closed-cell, sponge- or expanded-rubber materials. Comply with ASTM C 534, Type I for tubular materials.

2.2 See Editing Instruction No. 1 in the Evaluations for cautions about naming manufacturers and products. See Section 016000 "Product Requirements."TAPES

A. ASJ Tape: White vapor-retarder tape matching factory-applied jacket with acrylic adhesive, complying with ASTM C 1136.
   1. Width: 3 inches (75 mm).
   2. Thickness: 11.5 mils (0.29 mm).
   3. Adhesion: 90 ounces force/inch (1.0 N/mm) in width.
   4. Elongation: 2 percent.
   5. Tensile Strength: 40 lbf/inch (7.2 N/mm) in width.
   6. ASJ Tape Disks and Squares: Precut disks or squares of ASJ tape.

PART 3 - EXECUTION

3.1 EXAMINATION

A. Examine substrates and conditions for compliance with requirements for installation tolerances and other conditions affecting performance of insulation application.

   1. Verify that systems to be insulated have been tested and are free of defects.
   2. Verify that surfaces to be insulated are clean and dry.

B. Proceed with installation only after unsatisfactory conditions have been corrected.

3.2 PREPARATION

A. Surface Preparation: Clean and dry surfaces to receive insulation. Remove materials that will adversely affect insulation application.

B. Surface Preparation: Clean and prepare surfaces to be insulated. Before insulating, apply a corrosion coating to insulated surfaces as follows:

   1. Stainless Steel: Coat 300 series stainless steel with an epoxy primer 5 mils (0.127 mm) thick and an epoxy finish 5 mils (0.127 mm) thick if operating in a temperature range

Copyright 2010 AIA MasterSpec Premium

between 140 and 300 deg F (60 and 149 deg C). Consult coating manufacturer for appropriate coating materials and application methods for operating temperature range.

2. Carbon Steel: Coat carbon steel operating at a service temperature between 32 and 300 deg F (0 and 149 deg C) with an epoxy coating. Consult coating manufacturer for appropriate coating materials and application methods for operating temperature range.

C. Coordinate insulation installation with the trade installing heat tracing. Comply with requirements for heat tracing that apply to insulation.

D. Mix insulating cements with clean potable water; if insulating cements are to be in contact with stainless-steel surfaces, use demineralized water.

3.3 GENERAL INSTALLATION REQUIREMENTS

A. Install insulation materials, accessories, and finishes with smooth, straight, and even surfaces; free of voids throughout the length of piping including fittings, valves, and specialties.

B. Install insulation materials, forms, vapor barriers or retarders, jackets, and thicknesses required for each item of pipe system as specified in insulation system schedules.

C. Install accessories compatible with insulation materials and suitable for the service. Install accessories that do not corrode, soften, or otherwise attack insulation or jacket in either wet or dry state.

D. Install insulation with longitudinal seams at top and bottom of horizontal runs.

E. Install multiple layers of insulation with longitudinal and end seams staggered.

F. Do not weld brackets, clips, or other attachment devices to piping, fittings, and specialties.

G. Keep insulation materials dry during application and finishing.

H. Install insulation with tight longitudinal seams and end joints. Bond seams and joints with adhesive recommended by insulation material manufacturer.

I. Install insulation with least number of joints practical.

1. Cover joints and seams with tape, according to insulation material manufacturer's written instructions, to maintain vapor seal.
2. Where vapor barriers are indicated, apply vapor-barrier mastic on seams and joints and at ends adjacent to pipe flanges and fittings.

J. Cut insulation in a manner to avoid compressing insulation more than 75 percent of its nominal thickness.

K. Finish installation with systems at operating conditions. Repair joint separations and cracking due to thermal movement.

L. Repair damaged insulation facings by applying same facing material over damaged areas. Extend patches at least 4 inches (100 mm) beyond damaged areas. Adhere, staple, and seal patches similar to butt joints.

Copyright 2010 AIA MasterSpec Premium

M. For above-ambient services, do not install insulation to the following:

1. Vibration-control devices.
2. Testing agency labels and stamps.
3. Nameplates and data plates.
4. Cleanouts.

3.4 PENETRATIONS

A. Insulation Installation at Roof Penetrations: Install insulation continuously through roof penetrations.

1. Seal penetrations with flashing sealant.
2. For applications requiring only indoor insulation, terminate insulation above roof surface and seal with joint sealant. For applications requiring indoor and outdoor insulation, install insulation for outdoor applications tightly joined to indoor insulation ends. Seal joint with joint sealant.
3. Extend jacket of outdoor insulation outside roof flashing at least 2 inches (50 mm) below top of roof flashing.
4. Seal jacket to roof flashing with flashing sealant.

B. Insulation Installation at Underground Exterior Wall Penetrations: Terminate insulation flush with sleeve seal. Seal terminations with flashing sealant.

C. Insulation Installation at Aboveground Exterior Wall Penetrations: Install insulation continuously through wall penetrations.

1. Seal penetrations with flashing sealant.
2. For applications requiring only indoor insulation, terminate insulation inside wall surface and seal with joint sealant. For applications requiring indoor and outdoor insulation, install insulation for outdoor applications tightly joined to indoor insulation ends. Seal joint with joint sealant.
3. Extend jacket of outdoor insulation outside wall flashing and overlap wall flashing at least 2 inches (50 mm).
4. Seal jacket to wall flashing with flashing sealant.

D. Insulation Installation at Interior Wall and Partition Penetrations (That Are Not Fire Rated): Install insulation continuously through walls and partitions.

E. Insulation Installation at Fire-Rated Wall and Partition Penetrations: Install insulation continuously through penetrations of fire-rated walls and partitions.

1. Comply with requirements in Section 078413 "Penetration Firestopping" for firestopping and fire-resistive joint sealers.

F. Insulation Installation at Floor Penetrations:

1. Pipe: Install insulation continuously through floor penetrations.
2. Seal penetrations through fire-rated assemblies. Comply with requirements in Section 078413 "Penetration Firestopping."

Copyright 2010 AIA MasterSpec Premium

3.5 GENERAL PIPE INSULATION INSTALLATION

A. Requirements in this article generally apply to all insulation materials except where more specific requirements are specified in various pipe insulation material installation articles.

B. Insulation Installation on Fittings, Valves, Strainers, Flanges, and Unions:

1. Install insulation over fittings, valves, strainers, flanges, unions, and other specialties with continuous thermal and vapor-retarder integrity unless otherwise indicated.
2. Insulate pipe elbows using preformed fitting insulation or mitered fittings made from same material and density as adjacent pipe insulation. Each piece shall be butted tightly against adjoining piece and bonded with adhesive. Fill joints, seams, voids, and irregular surfaces with insulating cement finished to a smooth, hard, and uniform contour that is uniform with adjoining pipe insulation.
3. Insulate tee fittings with preformed fitting insulation or sectional pipe insulation of same material and thickness as used for adjacent pipe. Cut sectional pipe insulation to fit. Butt each section closely to the next and hold in place with tie wire. Bond pieces with adhesive.
4. Insulate valves using preformed fitting insulation or sectional pipe insulation of same material, density, and thickness as used for adjacent pipe. Overlap adjoining pipe insulation by not less than two times the thickness of pipe insulation, or one pipe diameter, whichever is thicker. For valves, insulate up to and including the bonnets, valve stuffing-box studs, bolts, and nuts. Fill joints, seams, and irregular surfaces with insulating cement.
5. Insulate strainers using preformed fitting insulation or sectional pipe insulation of same material, density, and thickness as used for adjacent pipe. Overlap adjoining pipe insulation by not less than two times the thickness of pipe insulation, or one pipe diameter, whichever is thicker. Fill joints, seams, and irregular surfaces with insulating cement. Insulate strainers so strainer basket flange or plug can be easily removed and replaced without damaging the insulation and jacket. Provide a removable reusable insulation cover. For below-ambient services, provide a design that maintains vapor barrier.
6. Insulate flanges and unions using a section of oversized preformed pipe insulation. Overlap adjoining pipe insulation by not less than two times the thickness of pipe insulation, or one pipe diameter, whichever is thicker.
7. Cover segmented insulated surfaces with a layer of finishing cement and coat with a mastic. Install vapor-barrier mastic for below-ambient services and a breather mastic for above-ambient services. Reinforce the mastic with fabric-reinforcing mesh. Trowel the mastic to a smooth and well-shaped contour.
8. For services not specified to receive a field-applied jacket except for flexible elastomeric and polyolefin, install fitted PVC cover over elbows, tees, strainers, valves, flanges, and unions. Terminate ends with PVC end caps. Tape PVC covers to adjoining insulation facing using PVC tape.
9. Stencil or label the outside insulation jacket of each union with the word "union." Match size and color of pipe labels.

C. Insulate instrument connections for thermometers, pressure gages, pressure temperature taps, test connections, flow meters, sensors, switches, and transmitters on insulated pipes. Shape insulation at these connections by tapering it to and around the connection with insulating cement and finish with finishing cement, mastic, and flashing sealant.

Copyright 2010 AIA MasterSpec Premium

D. Install removable insulation covers at locations indicated. Installation shall conform to the following:

1. Make removable flange and union insulation from sectional pipe insulation of same thickness as that on adjoining pipe. Install same insulation jacket as adjoining pipe insulation.
2. When flange and union covers are made from sectional pipe insulation, extend insulation from flanges or union long at least two times the insulation thickness over adjacent pipe insulation on each side of flange or union. Secure flange cover in place with stainless-steel or aluminum bands. Select band material compatible with insulation and jacket.
3. Construct removable valve insulation covers in same manner as for flanges, except divide the two-part section on the vertical center line of valve body.
4. When covers are made from block insulation, make two halves, each consisting of mitered blocks wired to stainless-steel fabric. Secure this wire frame, with its attached insulation, to flanges with tie wire. Extend insulation at least 2 inches (50 mm) over adjacent pipe insulation on each side of valve. Fill space between flange or union cover and pipe insulation with insulating cement. Finish cover assembly with insulating cement applied in two coats. After first coat is dry, apply and trowel second coat to a smooth finish.
5. Unless a PVC jacket is indicated in field-applied jacket schedules, finish exposed surfaces with a metal jacket.

3.6 INSTALLATION OF FLEXIBLE ELASTOMERIC INSULATION

A. Seal longitudinal seams and end joints with manufacturer's recommended adhesive to eliminate openings in insulation that allow passage of air to surface being insulated.

B. Insulation Installation on Pipe Flanges:

1. Install pipe insulation to outer diameter of pipe flange.
2. Make width of insulation section same as overall width of flange and bolts, plus twice the thickness of pipe insulation.
3. Fill voids between inner circumference of flange insulation and outer circumference of adjacent straight pipe segments with cut sections of sheet insulation of same thickness as pipe insulation.
4. Secure insulation to flanges and seal seams with manufacturer's recommended adhesive to eliminate openings in insulation that allow passage of air to surface being insulated.

C. Insulation Installation on Pipe Fittings and Elbows:

1. Install mitered sections of pipe insulation.
2. Secure insulation materials and seal seams with manufacturer's recommended adhesive to eliminate openings in insulation that allow passage of air to surface being insulated.

D. Insulation Installation on Valves and Pipe Specialties:

1. Install preformed valve covers manufactured of same material as pipe insulation when available.

Copyright 2010 AIA MasterSpec Premium

2. When preformed valve covers are not available, install cut sections of pipe and sheet insulation to valve body. Arrange insulation to permit access to packing and to allow valve operation without disturbing insulation.
3. Install insulation to flanges as specified for flange insulation application.
4. Secure insulation to valves and specialties and seal seams with manufacturer's recommended adhesive to eliminate openings in insulation that allow passage of air to surface being insulated.

3.7 INSTALLATION OF MINERAL-FIBER INSULATION

A. Insulation Installation on Straight Pipes and Tubes:

1. Secure each layer of preformed pipe insulation to pipe with wire or bands and tighten bands without deforming insulation materials.
2. Where vapor barriers are indicated, seal longitudinal seams, end joints, and protrusions with vapor-barrier mastic and joint sealant.
3. For insulation with factory-applied jackets on above-ambient surfaces, secure laps with outward clinched staples at 6 inches (150 mm) o.c.
4. For insulation with factory-applied jackets on below-ambient surfaces, do not staple longitudinal tabs. Instead, secure tabs with additional adhesive as recommended by insulation material manufacturer and seal with vapor-barrier mastic and flashing sealant.

B. Insulation Installation on Pipe Flanges:

1. Install preformed pipe insulation to outer diameter of pipe flange.
2. Make width of insulation section same as overall width of flange and bolts, plus twice the thickness of pipe insulation.
3. Fill voids between inner circumference of flange insulation and outer circumference of adjacent straight pipe segments with mineral-fiber blanket insulation.
4. Install jacket material with manufacturer's recommended adhesive, overlap seams at least 1 inch (25 mm), and seal joints with flashing sealant.

C. Insulation Installation on Pipe Fittings and Elbows:

1. Install preformed sections of same material as straight segments of pipe insulation when available.
2. When preformed insulation elbows and fittings are not available, install mitered sections of pipe insulation, to a thickness equal to adjoining pipe insulation. Secure insulation materials with wire or bands.

D. Insulation Installation on Valves and Pipe Specialties:

1. Install preformed sections of same material as straight segments of pipe insulation when available.
2. When preformed sections are not available, install mitered sections of pipe insulation to valve body.
3. Arrange insulation to permit access to packing and to allow valve operation without disturbing insulation.
4. Install insulation to flanges as specified for flange insulation application.

Copyright 2010 AIA MasterSpec Premium

3.8 FIELD QUALITY CONTROL

A. Testing Agency: Owner will engage a qualified testing agency to perform tests and inspections.

B. Perform tests and inspections.

C. Tests and Inspections:

1. Inspect pipe, fittings, strainers, and valves, randomly selected by Architect, by removing field-applied jacket and insulation in layers in reverse order of their installation. Extent of inspection shall be limited to three locations of straight pipe, three locations of threaded fittings, three locations of welded fittings, two locations of threaded strainers, two locations of welded strainers, three locations of threaded valves, and three locations of flanged valves for each pipe service defined in the "Piping Insulation Schedule, General" Article.

D. All insulation applications will be considered defective Work if sample inspection reveals noncompliance with requirements.

3.9 PIPING INSULATION SCHEDULE, GENERAL

A. Acceptable preformed pipe and tubular insulation materials and thicknesses are identified for each piping system and pipe size range. If more than one material is listed for a piping system, selection from materials listed is Contractor's option.

B. Items Not Insulated: Unless otherwise indicated, do not install insulation on the following:

1. Drainage piping located in crawl spaces.
2. Underground piping.
3. Chrome-plated pipes and fittings unless there is a potential for personnel injury.

3.10 INDOOR PIPING INSULATION SCHEDULE

A. Domestic Cold Water:

1. NPS 1 (DN 25) and Smaller: Insulation shall be one of the following:
   a. Flexible Elastomeric: 1/2 inch (13 mm) thick.
   b. Mineral-Fiber, Preformed Pipe Insulation, Type I: 1/2 inch (13 mm) thick.

2. NPS 1-1/4 (DN 32) and Larger: Insulation shall be one of the following:
   a. Flexible Elastomeric: 1 inch (25 mm) thick.
   b. Mineral-Fiber, Preformed Pipe Insulation, Type I: 1 inch (25 mm) thick.

B. Domestic Hot and Recirculated Hot Water:

1. NPS 1-1/4 (DN 32) and Smaller: Insulation shall be one of the following:
   a. Flexible Elastomeric: 3/4 inch (19 mm) thick.
   b. Mineral-Fiber, Preformed Pipe Insulation, Type I: 1/2 inch (13 mm) thick.

2. NPS 1-1/2 (DN 40) and Larger: Insulation shall be one of the following:

Copyright 2010 AIA MasterSpec Premium

a. Flexible Elastomeric: 1 inch (25 mm) thick.
b. Mineral-Fiber, Preformed Pipe Insulation, Type I: 1 inch (25 mm thick. Retain first paragraph below for personnel protection.

END OF SECTION 220719

Copyright 2013 AIA MasterSpec Premium

SECTION 221116 - DOMESTIC WATER PIPING

PART 1 - GENERAL

1.1 RELATED DOCUMENTS

A. Drawings and general provisions of the Contract, including General and Supplementary Conditions and Division 01 Specification Sections, apply to this Section.

1.2 SUMMARY

A. Section Includes:

1. Under-building-slab and aboveground domestic water pipes, tubes, and fittings inside buildings.

1.3 ACTION SUBMITTALS

A. Product Data: For transition fittings and dielectric fittings.

1.4 FIELD CONDITIONS

A. Interruption of Existing Water Service: Do not interrupt water service to facilities occupied by Owner or others unless permitted under the following conditions and then only after arranging to provide temporary water service according to requirements indicated:
1. Do not interrupt water service without Construction Manager's written permission.

PART 2 - PRODUCTS

2.1 PIPING MATERIALS

A. Potable-water piping and components shall comply with NSF 14 and NSF 61 Annex G. Plastic piping components shall be marked with "NSF-pw."

2.2 COPPER TUBE AND FITTINGS

A. Hard Copper Tube: ASTM B 88, Type L (ASTM B 88M, Type B) and ASTM B 88, Type M (ASTM B 88M, Type C) water tube, drawn temper.

B. Cast-Copper, Solder-Joint Fittings: ASME B16.18, pressure fittings.

C. Wrought-Copper, Solder-Joint Fittings: ASME B16.22, wrought-copper pressure fittings.

Copyright 2013 AIA MasterSpec Premium

D. Bronze Flanges: ASME B16.24, Class 150, with solder-joint ends.

E. Copper Unions:

1. MSS SP-123.
2. Cast-copper-alloy, hexagonal-stock body.
3. Ball-and-socket, metal-to-metal seating surfaces.
4. Solder-joint or threaded ends.

F. Copper Pressure-Seal-Joint Fittings:
1. Fittings for NPS 2 (DN 50) and Smaller: Wrought-copper fitting with EPDM-rubber, O-ring seal in each end.
2. Fittings for NPS 2-1/2 to NPS 4 (DN 65 to DN 100): Cast-bronze or wrought-copper fitting with EPDM-rubber, O-ring seal in each end.

G. Copper Push-on-Joint Fittings:
1. Description:

a. Cast-copper fitting complying with ASME B16.18 or wrought-copper fitting complying with ASME B 16.22.
b. Stainless-steel teeth and EPDM-rubber, O-ring seal in each end instead of solder-joint ends.

H. Copper-Tube, Extruded-Tee Connections:
1. Description: Tee formed in copper tube according to ASTM F 2014.

I. Appurtenances for Grooved-End Copper Tubing:
1. Bronze Fittings for Grooved-End, Copper Tubing: ASTM B 75 (ASTM B 75M) copper tube or ASTM B 584 bronze castings.
2. Mechanical Couplings for Grooved-End Copper Tubing:

a. Copper-tube dimensions and design similar to AWWA C606.
b. Ferrous housing sections.
c. EPDM-rubber gaskets suitable for hot and cold water.
d. Bolts and nuts.
e. Minimum Pressure Rating: 300 psig (2070 kPa).

2.3 DUCTILE-IRON PIPE AND FITTINGS

A. Mechanical-Joint, Ductile-Iron Pipe:

1. AWWA C151/A21.51, with mechanical-joint bell and plain spigot end unless grooved or flanged ends are indicated.
2. Glands, Gaskets, and Bolts: AWWA C111/A21.11, ductile- or gray-iron glands, rubber gaskets, and steel bolts.

B. Standard-Pattern, Mechanical-Joint Fittings:

1. AWWA C110/A21.10, ductile or gray iron.

Copyright 2013 AIA MasterSpec Premium

2. Glands, Gaskets, and Bolts: AWWA C111/A21.11, ductile- or gray-iron glands, rubber gaskets, and steel bolts.

C. Compact-Pattern, Mechanical-Joint Fittings:

1. AWWA C153/A21.53, ductile iron.
2. Glands, Gaskets, and Bolts: AWWA C111/A21.11, ductile- or gray-iron glands, rubber gaskets, and steel bolts.

D. Push-on-Joint, Ductile-Iron Pipe:

1. AWWA C151/A21.51.
2. Push-on-joint bell and plain spigot end unless grooved or flanged ends are indicated.

E. Standard-Pattern, Push-on-Joint Fittings:

1. AWWA C110/A21.10, ductile or gray iron.

F. Compact-Pattern, Push-on-Joint Fittings:

1. AWWA C153/A21.53, ductile iron.

G. Plain-End, Ductile-Iron Pipe: AWWA C151/A21.51.

H. Appurtenances for Grooved-End, Ductile-Iron Pipe:
1. Fittings for Grooved-End, Ductile-Iron Pipe: ASTM A 47/A 47M, malleable-iron castings or ASTM A 536, ductile-iron castings with dimensions that match pipe.
2. Mechanical Couplings for Grooved-End, Ductile-Iron-Piping:

a. AWWA C606 for ductile-iron-pipe dimensions.
b. Ferrous housing sections.
c. EPDM-rubber gaskets suitable for hot and cold water.
d. Bolts and nuts.
e. Minimum Pressure Rating:

1) NPS 14 to NPS 18 (DN 350 to DN 450): 250 psig (1725 kPa.
2) NPS 20 to NPS 46 (DN 500 to DN 900): 150 psig (1035 kPa).

2.4 CPVC PIPING

A. CPVC Pipe: ASTM F 441/F 441M, Schedule 40.

1. CPVC Socket Fittings: ASTM F 438 for Schedule 40.

B. CPVC Piping System: ASTM D 2846/D 2846M, SDR 11, pipe and socket fittings.

C. CPVC Tubing System: ASTM D 2846/D 2846M, SDR 11, tube and socket fittings.

Copyright 2013 AIA MasterSpec Premium

2.5 PVC PIPE AND FITTINGS

A. PVC Pipe: ASTM D 1785, Schedule 40.

B. PVC Socket Fittings: ASTM D 2466 for Schedule 40.

2.6 PP PIPE AND FITTINGS

A. PP Pipe: ASTM F 2389, SDR 7.4.

B. PVC Socket Fittings: ASTM F 2389.

2.7 PIPING JOINING MATERIALS

A. Pipe-Flange Gasket Materials:

1. AWWA C110/A21.10, rubber, flat face, 1/8 inch (3.2 mm) thick or ASME B16.21, nonmetallic and asbestos free unless otherwise indicated.
2. Full-face or ring type unless otherwise indicated.

B. Metal, Pipe-Flange Bolts and Nuts: ASME B18.2.1, carbon steel unless otherwise indicated.

C. Solder Filler Metals: ASTM B 32, lead-free alloys.

D. Flux: ASTM B 813, water flushable.

E. Brazing Filler Metals: AWS A5.8/A5.8M, BCuP Series, copper-phosphorus alloys for general-duty brazing unless otherwise indicated.

F. Solvent Cements for Joining CPVC Piping and Tubing: ASTM F 493.

1. CPVC solvent cement shall have a VOC content of 490 g/L or less when calculated according to 40 CFR 59, Subpart D (EPA Method 24).
2. Adhesive primer shall have a VOC content of 550 g/L or less when calculated according to 40 CFR 59, Subpart D (EPA Method 24).
3. Solvent cement and adhesive primer shall comply with the testing and product requirements of the California Department of Health Services' "Standard Practice for the Testing of Volatile Organic Emissions from Various Sources Using Small-Scale Environmental Chambers."

G. Solvent Cements for Joining PVC Piping: ASTM D 2564. Include primer according to ASTM F 656.

1. PVC solvent cement shall have a VOC content of 510 g/L or less when calculated according to 40 CFR 59, Subpart D (EPA Method 24).
2. Adhesive primer shall have a VOC content of 550 g/L or less when calculated according to 40 CFR 59, Subpart D (EPA Method 24).
3. Solvent cement and adhesive primer shall comply with the testing and product requirements of the California Department of Health Services' "Standard Practice for the

Copyright 2013 AIA MasterSpec Premium

Testing of Volatile Organic Emissions from Various Sources Using Small-Scale Environmental Chambers."

H. Plastic, Pipe-Flange Gaskets, Bolts, and Nuts: Type and material recommended by piping system manufacturer unless otherwise indicated.

2.8 ENCASEMENT FOR PIPING

A. Standard: ASTM A 674 or AWWA C105/A21.5.

B. Form: Sheet or tube.

C. Color: Black or natural.

2.9 TRANSITION FITTINGS

A. General Requirements:

1. Same size as pipes to be joined.
2. Pressure rating at least equal to pipes to be joined.
3. End connections compatible with pipes to be joined.

B. Fitting-Type Transition Couplings: Manufactured piping coupling or specified piping system fitting.

C. Sleeve-Type Transition Coupling: AWWA C219.

D. Plastic-to-Metal Transition Fittings:
1. Description:

a. CPVC or PVC one-piece fitting with manufacturer's Schedule 80 equivalent dimensions.

E. Plastic-to-Metal Transition Unions:
1. Description:

a. **CPVC or PVC** four-part union.
b. Solvent-cement-joint plastic end.
c. Union nut.

2.10 DIELECTRIC FITTINGS

A. General Requirements: Assembly of copper alloy and ferrous materials with separating nonconductive insulating material. Include end connections compatible with pipes to be joined.

B. Dielectric Unions:
1. Standard: ASSE 1079.
2. Pressure Rating: **125 psig (860 kPa) minimum at 180 deg F (82 deg C), 150 psig (1035 kPa)**.

Copyright 2013 AIA MasterSpec Premium

3. End Connections: Solder-joint copper alloy and threaded ferrous.

C. Dielectric Flanges:
1. Standard: ASSE 1079.
2. Factory-fabricated, bolted, companion-flange assembly.
3. Pressure Rating: **125 psig (860 kPa) minimum at 180 deg F (82 deg C**.
4. End Connections: Solder-joint copper alloy and threaded ferrous; threaded solder-joint copper alloy and threaded ferrous.

D. Dielectric-Flange Insulating Kits:
1. Nonconducting materials for field assembly of companion flanges.
2. Pressure Rating: **150 psig (1035 kPa)**.
3. Gasket: Neoprene or phenolic.
4. Bolt Sleeves: Phenolic or polyethylene.
5. Washers: Phenolic with steel backing washers.

E. Dielectric Nipples:
1. Standard: IAPMO PS 66.
2. Electroplated steel nipple complying with ASTM F 1545.
3. Pressure Rating and Temperature: **300 psig (2070 kPa) at 225 deg F (107 deg C**.
4. End Connections: Male threaded or grooved.
5. Lining: Inert and noncorrosive, propylene.

PART 3 - EXECUTION

3.1 EARTHWORK

A. Comply with requirements in Section 312000 "Earth Moving" for excavating, trenching, and backfilling.

3.2 PIPING INSTALLATION

A. Drawing plans, schematics, and diagrams indicate general location and arrangement of domestic water piping. Indicated locations and arrangements are used to size pipe and calculate friction loss, expansion, and other design considerations. Install piping as indicated unless deviations to layout are approved on coordination drawings.

B. Install copper tubing under building slab according to CDA's "Copper Tube Handbook."

C. Install ductile-iron piping under building slab with restrained joints according to AWWA C600 and AWWA M41.

D. Install underground copper tube and ductile-iron pipe in PE encasement according to ASTM A 674 or AWWA C105/A21.5.

E. Install shutoff valve, hose-end drain valve, strainer, pressure gage, and test tee with valve inside the building at each domestic water-service entrance. Comply with requirements for pressure

Copyright 2013 AIA MasterSpec Premium

gages in Section 220519 "Meters and Gages for Plumbing Piping" and with requirements for drain valves and strainers in Section 221119 "Domestic Water Piping Specialties."

F. Install shutoff valve immediately upstream of each dielectric fitting.

G. Install water-pressure-reducing valves downstream from shutoff valves. Comply with requirements for pressure-reducing valves in Section 221119 "Domestic Water Piping Specialties."

H. Install domestic water piping level without pitch and plumb.

I. Rough-in domestic water piping for water-meter installation according to utility company's requirements.

J. Install seismic restraints on piping. Comply with requirements for seismic-restraint devices in Section 220548 "Vibration and Seismic Controls for Plumbing Piping and Equipment."

K. Install piping concealed from view and protected from physical contact by building occupants unless otherwise indicated and except in equipment rooms and service areas.

L. Install piping indicated to be exposed and piping in equipment rooms and service areas at right angles or parallel to building walls. Diagonal runs are prohibited unless specifically indicated otherwise.

M. Install piping above accessible ceilings to allow sufficient space for ceiling panel removal, and coordinate with other services occupying that space.

N. Install piping to permit valve servicing.

O. Install nipples, unions, special fittings, and valves with pressure ratings the same as or higher than the system pressure rating used in applications below unless otherwise indicated.

P. Install piping free of sags and bends.

Q. Install fittings for changes in direction and branch connections.

R. Install PEX piping with loop at each change of direction of more than 90 degrees.

S. Install unions in copper tubing at final connection to each piece of equipment, machine, and specialty.

T. Install pressure gages on suction and discharge piping for each plumbing pump and packaged booster pump. Comply with requirements for pressure gages in Section 220519 "Meters and Gages for Plumbing Piping."

U. Install sleeves for piping penetrations of walls, ceilings, and floors. Comply with requirements for sleeves specified in Section 220517 "Sleeves and Sleeve Seals for Plumbing Piping."

3.3 JOINT CONSTRUCTION

A. Ream ends of pipes and tubes and remove burrs. Bevel plain ends of steel pipe.

Copyright 2013 AIA MasterSpec Premium

B. Remove scale, slag, dirt, and debris from inside and outside of pipes, tubes, and fittings before assembly.

C. Brazed Joints for Copper Tubing: Comply with CDA's "Copper Tube Handbook," "Brazed Joints" chapter.

D. Pressure-Sealed Joints for Copper Tubing: Join copper tube and pressure-seal fittings with tools recommended by fitting manufacturer.

E. Push-on Joints for Copper Tubing: Clean end of tube. Measure insertion depth with manufacturer's depth gage. Join copper tube and push-on-joint fittings by inserting tube to measured depth.

F. Extruded-Tee Connections: Form tee in copper tube according to ASTM F 2014. Use tool designed for copper tube; drill pilot hole, form collar for outlet, dimple tube to form seating stop, and braze branch tube into collar.

G. Joint Construction for Grooved-End Copper Tubing: Make joints according to AWWA C606. Roll groove ends of tubes. Lubricate and install gasket over ends of tubes or tube and fitting. Install coupling housing sections over gasket with keys seated in tubing grooves. Install and tighten housing bolts.

H. Flanged Joints: Select appropriate asbestos-free, nonmetallic gasket material in size, type, and thickness suitable for domestic water service. Join flanges with gasket and bolts according to ASME B31.9.

I. Joint Construction for Solvent-Cemented Plastic Piping: Clean and dry joining surfaces. Join pipe and fittings according to the following:

1. Comply with ASTM F 402 for safe-handling practice of cleaners, primers, and solvent cements. Apply primer.
2. CPVC Piping: Join according to ASTM D 2846/D 2846M Appendix.
3. PVC Piping: Join according to ASTM D 2855.

J. Joints for PEX Piping: Join according to ASTM F 1807.

K. Joints for Dissimilar-Material Piping: Make joints using adapters compatible with materials of both piping systems.

3.4 TRANSITION FITTING INSTALLATION

A. Install transition couplings at joints of dissimilar piping.

B. Transition Fittings in Underground Domestic Water Piping:

1. Fittings for NPS 1-1/2 (DN 40) and Smaller: Fitting-type coupling.
2. Fittings for NPS 2 (DN 50) and Larger: Sleeve-type coupling.

C. Transition Fittings in Aboveground Domestic Water Piping NPS 2 (DN 50) and Smaller: Plastic-to-metal transition fittings or unions.

Copyright 2013 AIA MasterSpec Premium

3.5 DIELECTRIC FITTING INSTALLATION

A. Install dielectric fittings in piping at connections of dissimilar metal piping and tubing.

B. Dielectric Fittings for NPS 2 (DN 50) and Smaller: Use dielectric couplings.

3.6 HANGER AND SUPPORT INSTALLATION

A. Comply with requirements for seismic-restraint devices in Section 220548 "Vibration and Seismic Controls for Plumbing Piping and Equipment."

B. Comply with requirements for pipe hanger, support products, and installation in Section 220529 "Hangers and Supports for Plumbing Piping and Equipment."

1. Vertical Piping: MSS Type 8 or 42, clamps.
2. Individual, Straight, Horizontal Piping Runs:

a. 100 Feet (30 m) and Less: MSS Type 1, adjustable, steel clevis hangers.
b. Longer Than 100 Feet (30 m): MSS Type 43, adjustable roller hangers.
c. Longer Than 100 Feet (30 m) if Indicated: MSS Type 49, spring cushion rolls.

3. Multiple, Straight, Horizontal Piping Runs 100 Feet (30 m) or Longer: MSS Type 44, pipe rolls. Support pipe rolls on trapeze.
4. Base of Vertical Piping: MSS Type 52, spring hangers.

C. Support vertical piping and tubing at base and at each floor.

D. Rod diameter may be reduced one size for double-rod hangers, to a minimum of 3/8 inch (10 mm).

E. Install hangers for copper tubing with the following maximum horizontal spacing and minimum rod diameters:

1. NPS 3/4 (DN 20) and Smaller: 60 inches (1500 mm) with 3/8-inch (10-mm) rod.
2. NPS 1 and NPS 1-1/4 (DN 25 and DN 32): 72 inches (1800 mm) with 3/8-inch (10-mm) rod.
3. NPS 1-1/2 and NPS 2 (DN 40 and DN 50): 96 inches (2400 mm) with 3/8-inch (10-mm) rod.
4. NPS 2-1/2 (DN 65): 108 inches (2700 mm) with 1/2-inch (13-mm) rod.
5. NPS 3 to NPS 5 (DN 80 to DN 125): 10 feet (3 m) with 1/2-inch (13-mm) rod.
6. NPS 6 (DN 150): 10 feet (3 m) with 5/8-inch (16-mm) rod.
7. NPS 8 (DN 200): 10 feet (3 m) with 3/4-inch (19-mm) rod.

F. Install supports for vertical copper tubing every 10 feet (3 m).

G. Install hangers for steel piping with the following maximum horizontal spacing and minimum rod diameters:

1. NPS 1-1/4 (DN 32) and Smaller: 84 inches (2100 mm) with 3/8-inch (10-mm) rod.
2. NPS 1-1/2 (DN 40): 108 inches (2700 mm) with 3/8-inch (10-mm) rod.
3. NPS 2 (DN 50): 10 feet (3 m) with 3/8-inch (10-mm) rod.

Copyright 2013 AIA MasterSpec Premium

4. NPS 2-1/2 (DN 65): 11 feet (3.4 m) with 1/2-inch (13-mm) rod.
5. NPS 3 and NPS 3-1/2 (DN 80 and DN 90): 12 feet (3.7 m) with 1/2-inch (13-mm) rod.
6. NPS 4 and NPS 5 (DN 100 and DN 125): 12 feet (3.7 m) with 5/8-inch (16-mm) rod.
7. NPS 6 (DN 150): 12 feet (3.7 m) with 3/4-inch (19-mm) rod.
8. NPS 8 to NPS 12 (DN 200 to DN 300): 12 feet (3.7 m) with 7/8-inch (22-mm) rod.

H. Install supports for vertical steel piping every 15 feet (4.5 m).

I. Install hangers for stainless-steel piping with the following maximum horizontal spacing and minimum rod diameters:

1. NPS 1-1/4 (DN 32) and Smaller: 84 inches (2100 mm) with 3/8-inch (10-mm) rod.
2. NPS 1-1/2 (DN 40): 108 inches (2700 mm) with 3/8-inch (10-mm) rod.
3. NPS 2 (DN 50): 10 feet (3 m) with 3/8-inch (10-mm) rod.
4. NPS 2-1/2 (DN 65): 11 feet (3.4 m) with 1/2-inch (13-mm) rod.
5. NPS 3 and NPS 3-1/2 (DN 80 and DN 90): 12 feet (3.7 m) with 1/2-inch (13-mm) rod.
6. NPS 4 and NPS 5 (DN 100 and DN 125): 12 feet (3.7 m) with 5/8-inch (16-mm) rod.
7. NPS 6 (DN 150): 12 feet (3.7 m) with 3/4-inch (19-mm) rod.
8. NPS 8 to NPS 12 (DN 200 to DN 300): 12 feet (3.7 m) with 7/8-inch (22-mm) rod.

J. Install supports for vertical stainless-steel piping every 15 feet (4.5 m).

K. Install vinyl-coated hangers for CPVC piping with the following maximum horizontal spacing and minimum rod diameters:

1. NPS 1 (DN 25) and Smaller: 36 inches (900 mm) with 3/8-inch (10-mm) rod.
2. NPS 1-1/4 to NPS 2 (DN 32 to DN 50): 48 inches (1200 mm) with 3/8-inch (10-mm) rod.
3. NPS 2-1/2 to NPS 3-1/2 (DN 65 to DN 90): 48 inches (1200 mm) with 1/2-inch (13-mm) rod.
4. NPS 4 and NPS 5 (DN 100 and DN 125): 48 inches (1200 mm) with 5/8-inch (16-mm) rod.
5. NPS 6 (DN 150): 48 inches (1200 mm) with 3/4-inch (19-mm) rod.
6. NPS 8 (DN 200): 48 inches (1200 mm) with 7/8-inch (22-mm) rod.

L. Install supports for vertical CPVC piping every 60 inches (1500 mm) for NPS 1 (DN 25) and smaller, and every 72 inches (1800 mm) for NPS 1-1/4 (DN 32) and larger.

M. Install hangers for vertical PEX piping every 48 inches (1200 mm).

N. Install vinyl-coated hangers for PVC piping with the following maximum horizontal spacing and minimum rod diameters:

1. NPS 2 (DN 50) and Smaller: 48 inches (1200 mm) with 3/8-inch (10-mm) rod.
2. NPS 2-1/2 to NPS 3-1/2 (DN 65 to DN 90): 48 inches (1200 mm) with 1/2-inch (13-mm) rod.
3. NPS 4 and NPS 5 (DN 100 and DN 125): 48 inches (1200 mm) with 5/8-inch (16-mm) rod.
4. NPS 6 (DN 150): 48 inches (1200 mm) with 3/4-inch (19-mm) rod.
5. NPS 8 (DN 200): 48 inches (1200 mm) with 7/8-inch (22-mm) rod.

O. Install supports for vertical PVC piping every 48 inches (1200 mm).

Copyright 2013 AIA MasterSpec Premium

3.7 CONNECTIONS

A. Drawings indicate general arrangement of piping, fittings, and specialties.

B. When installing piping adjacent to equipment and machines, allow space for service and maintenance.

C. Connect domestic water piping to exterior water-service piping. Use transition fitting to join dissimilar piping materials.

D. Connect domestic water piping to water-service piping with shutoff valve; extend and connect to the following:
   1. Plumbing Fixtures: Cold- and hot-water-supply piping in sizes indicated, but not smaller than that required by plumbing code.
   2. Equipment: Cold- and hot-water-supply piping as indicated, but not smaller than equipment connections. Provide shutoff valve and union for each connection. Use flanges instead of unions for NPS 2-1/2 (DN 65) and larger.

3.8 IDENTIFICATION

A. Identify system components. Comply with requirements for identification materials and installation in Section 220553 "Identification for Plumbing Piping and Equipment."

B. Label pressure piping with system operating pressure.

3.9 FIELD QUALITY CONTROL

A. Perform the following tests and inspections:

   1. Piping Inspections:

      a. Do not enclose, cover, or put piping into operation until it has been inspected and approved by authorities having jurisdiction.
      b. During installation, notify authorities having jurisdiction at least one day before inspection must be made. Perform tests specified below in presence of authorities having jurisdiction:

         1) Roughing-in Inspection: Arrange for inspection of piping before concealing or closing in after roughing in and before setting fixtures.
         2) Final Inspection: Arrange for authorities having jurisdiction to observe tests specified in "Piping Tests" Subparagraph below and to ensure compliance with requirements.

      c. Reinspection: If authorities having jurisdiction find that piping will not pass tests or inspections, make required corrections and arrange for reinspection.
      d. Reports: Prepare inspection reports and have them signed by authorities having jurisdiction.

   2. Piping Tests:

Copyright 2013 AIA MasterSpec Premium

a. Fill domestic water piping. Check components to determine that they are not air bound and that piping is full of water.
b. Test for leaks and defects in new piping and parts of existing piping that have been altered, extended, or repaired. If testing is performed in segments, submit a separate report for each test, complete with diagram of portion of piping tested.
c. Leave new, altered, extended, or replaced domestic water piping uncovered and unconcealed until it has been tested and approved. Expose work that was covered or concealed before it was tested.
d. Cap and subject piping to static water pressure of 50 psig (345 kPa) above operating pressure, without exceeding pressure rating of piping system materials. Isolate test source and allow it to stand for four hours. Leaks and loss in test pressure constitute defects that must be repaired.
e. Repair leaks and defects with new materials, and retest piping or portion thereof until satisfactory results are obtained.
f. Prepare reports for tests and for corrective action required.

B. Domestic water piping will be considered defective if it does not pass tests and inspections.

C. Prepare test and inspection reports.

3.10 ADJUSTING

A. Perform the following adjustments before operation:

1. Close drain valves, hydrants, and hose bibbs.
2. Open shutoff valves to fully open position.
3. Open throttling valves to proper setting.
4. Adjust balancing valves in hot-water-circulation return piping to provide adequate flow.

   a. Manually adjust ball-type balancing valves in hot-water-circulation return piping to provide hot-water flow in each branch.
   b. Adjust calibrated balancing valves to flows indicated.

5. Remove plugs used during testing of piping and for temporary sealing of piping during installation.
6. Remove and clean strainer screens. Close drain valves and replace drain plugs.
7. Remove filter cartridges from housings and verify that cartridges are as specified for application where used and are clean and ready for use.
8. Check plumbing specialties and verify proper settings, adjustments, and operation.

3.11 CLEANING

A. Clean and disinfect potable domestic water piping as follows:

1. Purge new piping and parts of existing piping that have been altered, extended, or repaired before using.
2. Use purging and disinfecting procedures prescribed by authorities having jurisdiction; if methods are not prescribed, use procedures described in either AWWA C651 or AWWA C652 or follow procedures described below:

Copyright 2013 AIA MasterSpec Premium

a. Flush piping system with clean, potable water until dirty water does not appear at outlets.
b. Fill and isolate system according to either of the following:

1) Fill system or part thereof with water/chlorine solution with at least 50 ppm (50 mg/L) of chlorine. Isolate with valves and allow to stand for 24 hours.
2) Fill system or part thereof with water/chlorine solution with at least 200 ppm (200 mg/L) of chlorine. Isolate and allow to stand for three hours.

c. Flush system with clean, potable water until no chlorine is in water coming from system after the standing time.
d. Repeat procedures if biological examination shows contamination.
e. Submit water samples in sterile bottles to authorities having jurisdiction.

B. Clean non-potable domestic water piping as follows:

1. Purge new piping and parts of existing piping that have been altered, extended, or repaired before using.
2. Use purging procedures prescribed by authorities having jurisdiction or; if methods are not prescribed, follow procedures described below:

a. Flush piping system with clean, potable water until dirty water does not appear at outlets.
b. Submit water samples in sterile bottles to authorities having jurisdiction. Repeat procedures if biological examination shows contamination.

C. Prepare and submit reports of purging and disinfecting activities. Include copies of water-sample approvals from authorities having jurisdiction.

D. Clean interior of domestic water piping system. Remove dirt and debris as work progresses.

3.12 PIPING SCHEDULE

A. Transition and special fittings with pressure ratings at least equal to piping rating may be used in applications below unless otherwise indicated.

B. Flanges and unions may be used for aboveground piping joints unless otherwise indicated.

C. Fitting Option: Extruded-tee connections and brazed joints may be used on aboveground copper tubing.

D. Under-building-slab, domestic water, building-service piping, NPS 3 (DN 80) and smaller, shall be one of the following:

1. Soft copper tube, ASTM B 88, Type K (ASTM B 88M, Type A) ASTM B 88, Type L (ASTM B 88M, Type B); copper, solder-joint fittings; and brazed copper pressure-seal fittings; and pressure-sealed joints.
2. PVC, Schedule 40; socket fittings; and solvent-cemented joints.
3. PP, SDR 7.4SDR 11 socket fittings; and fusion-welded joints.

Copyright 2013 AIA MasterSpec Premium

4. Mechanical-joint, ductile-iron pipe; standard pattern, mechanical-joint fittings; and mechanical joints.
5. Push-on-joint, ductile-iron pipe; standard pattern, push-on-joint fittings; and gasketed joints.
6. Plain-end, ductile-iron pipe; grooved-joint, ductile-iron-pipe appurtenances; and grooved joints.
7. PVC, Schedule 40; socket fittings; and solvent-cemented joints.
8. PP, SDR 7.4SDR 11socket fittings; and fusion-welded joints.

9. Mechanical-joint, ductile-iron pipe; standard pattern, mechanical-joint fittings; and mechanical joints.
10. Push-on-joint, ductile-iron pipe; standard pattern, push-on-joint fittings; and gasketed joints.
11. Plain-end, ductile-iron pipe; grooved-joint, ductile-iron-pipe appurtenances; and grooved joints.

E. Aboveground domestic water piping, NPS 2 (DN 50) and smaller, shall be one of the following:

1. Galvanized-steel pipe and nipples; galvanized, gray-iron threaded fittings; and threaded joints.
2. Hard copper tube, ASTM B 88, Type L (ASTM B 88M, Type B) ASTM B 88, Type M (ASTM B 88M, Type C); cast or copper, solder-joint fittings; and brazed joints.
3. Hard copper tube, [ASTM B 88, Type L (ASTM B 88M, Type B); copper pressure-seal-joint fittings; and pressure-sealed joints.
4. CPVC, Schedule 40; socket fittings; and solvent-cemented joints.
5. CPVC Tubing System: CPVC tube; CPVC socket fittings; and solvent-cemented joints. NPS 1-1/2 (DN 40) and NPS 2 (DN 50) CPVC pipe with CPVC socket fittings may be used instead of tubing.
6. PEX tube, NPS 1 (DN 25) and smaller; fittings for PEX tube; and crimped joints.
7. PE-AL-PE tube, NPS 1 (DN 25) and smaller; fittings for PE-AL-PE tube; and crimped joints
8. PEX-AL-PEX tube, NPS 1 (DN 25) and smaller; fittings for PEX-AL-PEX tube; and crimped joints.
9. PVC, Schedule 40; socket fittings; and solvent-cemented joints.
10. PP, SDR 7.4, SDR 11 socket fittings; and fusion-welded joints.

F. Aboveground domestic water piping, NPS 2-1/2 to NPS 4 (DN 65 to DN 100) <, shall be one of the following:

1. Hard copper tube, ASTM B 88, Type L (ASTM B 88M, Type B) ASTM B 88, Type M (ASTM B 88M, Type C); cast copper, solder-joint fittings; and brazed joints.
2. Hard copper tube, ASTM B 88, Type L (ASTM B 88M, Type B); grooved-joint, copper-tube appurtenances; and grooved joints.
3. Galvanized-steel pipe and nipples; galvanized, gray-iron threaded fittings; and threaded joints.
4. Galvanized-steel pipe; grooved-joint, galvanized-steel-pipe appurtenances; and grooved joints.
5. CPVC, Schedule 40; socket fittings; and solvent-cemented joints.
6. PVC, Schedule 40; socket fittings; and solvent-cemented joints.
7. PP, SDR 7.4, SDR 11 socket fittings; and fusion-welded joints.

Copyright 2013 AIA MasterSpec Premium

G. Aboveground domestic water piping, NPS 5 to NPS 8 (DN 125 to DN 200), shall be one of the following:

1. Hard copper tube, ASTM B 88, Type L (ASTM B 88M, Type B) Type M (ASTM B 88M, Type C); cast copper, solder-joint fittings; and brazed joints.
2. CPVC, Schedule 40; socket fittings; and solvent-cemented joints.
3. PVC, Schedule 40; socket fittings; and solvent-cemented joints.

H. Aboveground, combined domestic water-service and fire-service-main piping, NPS 6 to NPS 12 (DN 150 to (DN 300), shall be one of the following:

1. Plain-end, ductile-iron pipe; grooved-joint, ductile-iron-pipe appurtenances; and grooved joints.
2. Galvanized-steel pipe and nipples; galvanized, gray-iron threaded fittings; and threaded joints.
3. Galvanized-steel pipe; grooved-joint, galvanized-steel-pipe appurtenances; and grooved joints.

3.13 VALVE SCHEDULE

A. Drawings indicate valve types to be used. Where specific valve types are not indicated, the following requirements apply:

1. Shutoff Duty: Use ball or gate valves for piping NPS 2 (DN 50) and smaller. Use butterfly, ball, or gate valves with flanged ends for piping NPS 2-1/2 (DN 65) and larger.
2. Throttling Duty: Use ball or globe valves for piping NPS 2 (DN 50) and smaller. Use butterfly or ball valves with flanged ends for piping NPS 2-1/2 (DN 65) and larger.
3. Hot-Water Circulation Piping, Balancing Duty: Calibrated balancing valves.
4. Drain Duty: Hose-end drain valves.

B. Use check valves to maintain correct direction of domestic water flow to and from equipment.

C. Iron grooved-end valves may be used with grooved-end piping.

END OF SECTION 221116

Copyright 2012 AIA MasterSpec Premium

SECTION 221316 - SANITARY WASTE AND VENT PIPING

PART 1 - GENERAL

1.1 RELATED DOCUMENTS

A. Drawings and general provisions of the Contract, including General and Supplementary Conditions and Division 01 Specification Sections, apply to this Section.

1.2 SUMMARY

A. Section Includes:

1. Pipe, tube, and fittings.

1.3 PERFORMANCE REQUIREMENTS

A. Components and installation shall be capable of withstanding the following minimum working pressure unless otherwise indicated:

1. Soil, Waste, and Vent Piping: 10-foot head of water (30 kPa)
2. Waste, Force-Main Piping: 50 psig (345 kPa).

B. Seismic Performance: Soil, waste, and vent piping and support and installation shall withstand the effects of earthquake motions determined according to ASCE/SEI 7.

1.4 ACTION SUBMITTALS

A. Product Data: For each type of product indicated.

B. Shop Drawings: For sovent drainage system. Include plans, elevations, sections, and details.

1.5 QUALITY ASSURANCE

A. Piping materials shall bear label, stamp, or other markings of specified testing agency.

B. Comply with NSF/ANSI 14, "Plastics Piping Systems Components and Related Materials," for plastic piping components. Include marking with "NSF-dwv" for plastic drain, waste, and vent piping and "NSF-sewer" for plastic sewer piping.

Copyright 2012 AIA MasterSpec Premium

1.6 PROJECT CONDITIONS

A. Interruption of Existing Sanitary Waste Service: Do not interrupt service to facilities occupied by Owner or others unless permitted under the following conditions and then only after arranging to provide temporary service according to requirements indicated:

1. Notify Construction Manager no fewer than two days in advance of proposed interruption of sanitary waste service.
2. Do not proceed with interruption of sanitary waste service without Construction Manager's written permission.

PART 2 - PRODUCTS

2.1 PIPING MATERIALS

A. Comply with requirements in "Piping Schedule" Article for applications of pipe, tube, fitting materials, and joining methods for specific services, service locations, and pipe sizes.

2.2 HUBLESS, CAST-IRON SOIL PIPE AND FITTINGS

A. Pipe and Fittings: ASTM A 888 or CISPI 301.

B. Sovent Stack Fittings: ASME B16.45 or ASSE 1043, hubless, cast-iron aerator and deaerator drainage fittings.

C. Heavy-Duty, Hubless-Piping Couplings:

1.
2. Standards: ASTM C 1277 and ASTM C 1540.
3. Description: Stainless-steel shield with stainless-steel bands and tightening devices; and ASTM C 564, rubber sleeve with integral, center pipe stop.

D. Cast-Iron, Hubless-Piping Couplings:

1.
2. Standard: ASTM C 1277.
3. Description: Two-piece ASTM A 48/A 48M, cast-iron housing; stainless-steel bolts and nuts; and ASTM C 564, rubber sleeve with integral, center pipe stop.

4.

2.3 PVC PIPE AND FITTINGS

A. Solid-Wall PVC Pipe: ASTM D 2665, drain, waste, and vent.

B. Cellular-Core PVC Pipe: ASTM F 891, Schedule 40.

Copyright 2012 AIA MasterSpec Premium

C. PVC Socket Fittings: ASTM D 2665, made to ASTM D 3311, drain, waste, and vent patterns and to fit Schedule 40 pipe.

D. Adhesive Primer: ASTM F 656.

1. Adhesive primer shall have a VOC content of 550 g/L or less when calculated according to 40 CFR 59, Subpart D (EPA Method 24).
2. Adhesive primer shall comply with the testing and product requirements of the California Department of Health Services' "Standard Practice for the Testing of Volatile Organic Emissions from Various Sources Using Small-Scale Environmental Chambers."

2.4 SPECIALTY PIPE FITTINGS

A. Transition Couplings:

1. General Requirements: Fitting or device for joining piping with small differences in OD's or of different materials. Include end connections same size as and compatible with pipes to be joined.
2. Fitting-Type Transition Couplings: Manufactured piping coupling or specified piping system fitting.

3. Pressure Transition Couplings:

a.
b. Standard: AWWA C219.
c. Description: Metal, sleeve-type same size as, with pressure rating at least equal to, and ends compatible with, pipes to be joined.
d. Center-Sleeve Material: Manufacturer's standard.
e. Gasket Material: Natural or synthetic rubber.
f. Metal Component Finish: Corrosion-resistant coating or material.

B. Dielectric Fittings:

1. General Requirements: Assembly of copper alloy and ferrous materials with separating nonconductive insulating material. Include end connections compatible with pipes to be joined.
2. Dielectric Unions:

a.
b. Description:

1) Standard: ASSE 1079.
2) Pressure Rating: 125 psig (860 kPa) minimum at 180 deg F (82 deg C.
3) End Connections: Solder-joint copper alloy and threaded ferrous.

3. Dielectric Flanges:
a. Description:

1) Standard: ASSE 1079.
2) Factory-fabricated, bolted, companion-flange assembly.

Copyright 2012 AIA MasterSpec Premium

3) Pressure Rating: 125 psig (860 kPa) minimum at 180 deg F (82 deg C.
4) End Connections: Solder-joint copper alloy and threaded ferrous; threaded solder-joint copper alloy and threaded ferrous.

4. Dielectric-Flange Insulating Kits:

a.
b. Description:

1) Nonconducting materials for field assembly of companion flanges.
2) Pressure Rating: 150 psig (1035 kPa) .
3) Gasket: Neoprene or phenolic.
4) Bolt Sleeves: Phenolic or polyethylene.
5) Washers: Phenolic with steel backing washers.

5. Dielectric Nipples:

a.
b. Description:

1) Standard: IAPMO PS 66
2) Electroplated steel nipple.
3) Pressure Rating: 300 psig (2070 kPa) at 225 deg F (107 deg C) <.
4) End Connections: Male threaded or grooved.
5) Lining: Inert and noncorrosive, propylene.

PART 3 - EXECUTION

3.1 EARTH MOVING

A. Comply with requirements for excavating, trenching, and backfilling specified in Section 312000 "Earth Moving."

3.2 PIPING INSTALLATION

A. Drawing plans, schematics, and diagrams indicate general location and arrangement of piping systems. Indicated locations and arrangements were used to size pipe and calculate friction loss, expansion, pump sizing, and other design considerations. Install piping as indicated unless deviations to layout are approved on coordination drawings.

B. Install piping in concealed locations unless otherwise indicated and except in equipment rooms and service areas.

C. Install piping indicated to be exposed and piping in equipment rooms and service areas at right angles or parallel to building walls. Diagonal runs are prohibited unless specifically indicated otherwise.

D. Install piping above accessible ceilings to allow sufficient space for ceiling panel removal.

Copyright 2012 AIA MasterSpec Premium

E. Install piping to permit valve servicing.

F. Install piping at indicated slopes.

G. Install piping free of sags and bends.

H. Install fittings for changes in direction and branch connections.

I. Install piping to allow application of insulation.

J. Install seismic restraints on piping. Comply with requirements for seismic-restraint devices specified in Section 220548 "Vibration and Seismic Controls for Plumbing Piping and Equipment."

K. Make changes in direction for soil and waste drainage and vent piping using appropriate branches, bends, and long-sweep bends. Sanitary tees and short-sweep 1/4 bends may be used on vertical stacks if change in direction of flow is from horizontal to vertical. Use long-turn, double Y-branch and 1/8-bend fittings if two fixtures are installed back to back or side by side with common drain pipe. Straight tees, elbows, and crosses may be used on vent lines. Do not change direction of flow more than 90 degrees. Use proper size of standard increasers and reducers if pipes of different sizes are connected. Reducing size of drainage piping in direction of flow is prohibited.

L. Lay buried building drainage piping beginning at low point of each system. Install true to grades and alignment indicated, with unbroken continuity of invert. Place hub ends of piping upstream. Install required gaskets according to manufacturer's written instructions for use of lubricants, cements, and other installation requirements. Maintain swab in piping and pull past each joint as completed.

M. Install soil and waste drainage and vent piping at the following minimum slopes unless otherwise indicated:

1. Building Sanitary Drain: 2 percent downward in direction of flow for piping NPS 3 (DN 80) and smaller; 1 percent downward in direction of flow for piping NPS 4 (DN 100) and larger.
2. Horizontal Sanitary Drainage Piping: 2 percent downward in direction of flow.
3. Vent Piping: 1 percent down toward vertical fixture vent or toward vent stack.

N. Install underground, ductile-iron, force-main piping according to AWWA C600. Install buried piping inside building between wall and floor penetrations and connection to sanitary sewer piping outside building with restrained joints. Anchor pipe to wall or floor. Install thrust-block supports at vertical and horizontal offsets.

1. Install encasement on piping according to ASTM A 674 or AWWA C105/A 21.5.

O. Install force mains at elevations indicated.

P. Plumbing Specialties:

Copyright 2012 AIA MasterSpec Premium

1. Install backwater valves in sanitary waster gravity-flow piping. Comply with requirements for backwater valves specified in Section 221319 "Sanitary Waste Piping Specialties."
2. Install cleanouts at grade and extend to where building sanitary drains connect to building sanitary sewers in sanitary drainage gravity-flow piping. Install cleanout fitting with closure plug inside the building in sanitary drainage force-main piping. Comply with requirements for cleanouts specified in Section 221319 "Sanitary Waste Piping Specialties."
3. Install drains in sanitary drainage gravity-flow piping. Comply with requirements for drains specified in Section 221319 "Sanitary Waste Piping Specialties."

Q. Do not enclose, cover, or put piping into operation until it is inspected and approved by authorities having jurisdiction.

R. Install sleeves for piping penetrations of walls, ceilings, and floors. Comply with requirements for sleeves specified in Section 220517 "Sleeves and Sleeve Seals for Plumbing Piping."

S. Install sleeve seals for piping penetrations of concrete walls and slabs. Comply with requirements for sleeve seals specified in Section 220517 "Sleeves and Sleeve Seals for Plumbing Piping."

T. Install escutcheons for piping penetrations of walls, ceilings, and floors. Comply with requirements for escutcheons specified in Section 220518 "Escutcheons for Plumbing Piping."

3.3 JOINT CONSTRUCTION

A. Join hubless, cast-iron soil piping according to CISPI 310 and CISPI's "Cast Iron Soil Pipe and Fittings Handbook" for hubless-piping coupling joints.

B. Grooved Joints: Cut groove ends of pipe according to AWWA C606. Lubricate and install gasket over ends of pipes or pipe and fitting. Install coupling housing sections, over gasket, with keys seated in piping grooves. Install and tighten housing bolts.

C. Flanged Joints: Align bolt holes. Select appropriate gasket material, size, type, and thickness. Install gasket concentrically positioned. Use suitable lubricants on bolt threads. Torque bolts in cross pattern.

D. Plastic, Nonpressure-Piping, Solvent-Cement Joints: Clean and dry joining surfaces. Join pipe and fittings according to the following:

1. Comply with ASTM F 402 for safe-handling practice of cleaners, primers, and solvent cements.
2. ABS Piping: Join according to ASTM D 2235 and ASTM D 2661 Appendixes.
3. PVC Piping: Join according to ASTM D 2855 and ASTM D 2665 Appendixes.

3.4 SPECIALTY PIPE FITTING INSTALLATION

A. Dielectric Fittings:

Copyright 2012 AIA MasterSpec Premium

1. Install dielectric fittings in piping at connections of dissimilar metal piping and tubing.
2. Dielectric Fittings for NPS 2 (DN 50) and Smaller: Use dielectric.

3.5 VALVE INSTALLATION

A. General valve installation requirements are specified in Section 220523.12 "Ball Valves for Plumbing Piping," Section 220523.13 "Butterfly Valves for Plumbing Piping," Section 220523.14 "Check Valves for Plumbing Piping," and Section 220523.15 "Gate Valves for Plumbing Piping."

B. Shutoff Valves:

1. Install shutoff valve on each sewage pump discharge.
2. Install gate or full-port ball valve for piping NPS 2 (DN 50) and smaller.
3. Install gate valve for piping NPS 2-1/2 (DN 65) and larger.

C. Check Valves: Install swing check valve, between pump and shutoff valve, on each sewage pump discharge.

D. Backwater Valves: Install backwater valves in piping subject to backflow.

1. Horizontal Piping: Horizontal backwater valves. Use normally closed type unless otherwise indicated.
2. Floor Drains: Drain outlet backwater valves unless drain has integral backwater valve.
3. Install backwater valves in accessible locations.
4. Comply with requirements for backwater valve specified in Section 221319 "Sanitary Waste Piping Specialties."

3.6 HANGER AND SUPPORT INSTALLATION

A. Comply with requirements for seismic-restraint devices specified in Section 220548 "Vibration and Seismic Controls for Plumbing Piping and Equipment."

B. Comply with requirements for pipe hanger and support devices and installation specified in Section 220529 "Hangers and Supports for Plumbing Piping and Equipment."

1. Install carbon-steel pipe hangers for horizontal piping in noncorrosive environments.
2. Install stainless-steel pipe hangers for horizontal piping in corrosive environments.
3. Install carbon-steel pipe support clamps for vertical piping in noncorrosive environments.
4. Install stainless-steel pipe support clamps for vertical piping in corrosive environments.
5. Vertical Piping: MSS Type 8 or Type 42, clamps.
6. Install individual, straight, horizontal piping runs:

   a. 100 Feet (30 m) and Less: MSS Type 1, adjustable, steel clevis hangers.

7. Multiple, Straight, Horizontal Piping Runs 100 Feet (30 m) or Longer: MSS Type 44, pipe rolls. Support pipe rolls on trapeze.
8. Base of Vertical Piping: MSS Type 52, spring hangers.

Copyright 2012 AIA MasterSpec Premium

C. Support horizontal piping and tubing within 12 inches (300 mm) of each fitting, valve, and coupling.

D. Support vertical piping and tubing at base and at each floor.

E. Rod diameter may be reduced one size for double-rod hangers, with 3/8-inch (10-mm) minimum rods.

F. Install hangers for cast-iron soil piping with the following maximum horizontal spacing and minimum rod diameters:

1. NPS 1-1/2 and NPS 2 (DN 40 and DN 50): 60 inches (1500 mm) with 3/8-inch (10-mm) rod.
2. NPS 3 (DN 80): 60 inches (1500 mm) with 1/2-inch (13-mm) rod.
3. NPS 4 and NPS 5 (DN 100 and DN 125): 60 inches (1500 mm) with 5/8-inch (16-mm) rod.

G. Install supports for vertical cast-iron soil piping every 15 feet (4.5 m).

H. Install hangers for steel piping with the following maximum horizontal spacing and minimum rod diameters:

1. NPS 1-1/4 (DN 32): 84 inches (2100 mm) with 3/8-inch (10-mm) rod.
2. NPS 1-1/2 (DN 40): 108 inches (2700 mm) with 3/8-inch (10-mm) rod.
3. NPS 2 (DN 50): 10 feet (3 m) with 3/8-inch (10-mm) rod.
4. NPS 2-1/2 (DN 65): 11 feet (3.4 m) with 1/2-inch (13-mm) rod.
5. NPS 3 (DN 80): 12 feet (3.7 m) with 1/2-inch (13-mm) rod.
6. NPS 4 and NPS 5 (DN 100 and DN 125): 12 feet (3.7 m) with 5/8-inch (16-mm) rod.

I. Install hangers for PVC piping with the following maximum horizontal spacing and minimum rod diameters:

1. NPS 1-1/2 and NPS 2 (DN 40 and DN 50): 48 inches (1200 mm) with 3/8-inch (10-mm) rod.
2. NPS 3 (DN 80): 48 inches (1200 mm) with 1/2-inch (13-mm) rod.
3. NPS 4 and NPS 5 (DN 100 and DN 125): 48 inches (1200 mm) with 5/8-inch (16-mm) rod.

J. Install supports for vertical PVC piping every 48 inches (1200 mm).

K. Support piping and tubing not listed above according to MSS SP-69 and manufacturer's written instructions.

3.7 CONNECTIONS

A. Drawings indicate general arrangement of piping, fittings, and specialties.

B. Connect soil and waste piping to exterior sanitary sewerage piping. Use transition fitting to join dissimilar piping materials.

C. Connect drainage and vent piping to the following:

Copyright 2012 AIA MasterSpec Premium

1. Plumbing Fixtures: Connect drainage piping in sizes indicated, but not smaller than required by plumbing code.
2. Plumbing Fixtures and Equipment: Connect atmospheric vent piping in sizes indicated, but not smaller than required by authorities having jurisdiction.
3. Plumbing Specialties: Connect drainage and vent piping in sizes indicated, but not smaller than required by plumbing code.
4. Install test tees (wall cleanouts) in conductors near floor and floor cleanouts with cover flush with floor.

3.8 IDENTIFICATION

A. Identify exposed sanitary waste and vent piping. Comply with requirements for identification specified in Section 220553 "Identification for Plumbing Piping and Equipment."

3.9 FIELD QUALITY CONTROL

A. During installation, notify authorities having jurisdiction at least 24 hours before inspection must be made. Perform tests specified below in presence of authorities having jurisdiction.

1. Roughing-in Inspection: Arrange for inspection of piping before concealing or closing-in after roughing-in and before setting fixtures.
2. Final Inspection: Arrange for final inspection by authorities having jurisdiction to observe tests specified below and to ensure compliance with requirements.

B. Reinspection: If authorities having jurisdiction find that piping will not pass test or inspection, make required corrections and arrange for reinspection.

C. Reports: Prepare inspection reports and have them signed by authorities having jurisdiction.

D. Test sanitary drainage and vent piping according to procedures of authorities having jurisdiction or, in absence of published procedures, as follows:

1. Test for leaks and defects in new piping and parts of existing piping that have been altered, extended, or repaired. If testing is performed in segments, submit separate report for each test, complete with diagram of portion of piping tested.
2. Leave uncovered and unconcealed new, altered, extended, or replaced drainage and vent piping until it has been tested and approved. Expose work that was covered or concealed before it was tested.
3. Roughing-in Plumbing Test Procedure: Test drainage and vent piping except outside leaders on completion of roughing-in. Close openings in piping system and fill with water to point of overflow, but not less than 10-foot head of water (30 kPa). From 15 minutes before inspection starts to completion of inspection, water level must not drop. Inspect joints for leaks.
4. Finished Plumbing Test Procedure: After plumbing fixtures have been set and traps filled with water, test connections and prove they are gastight and watertight. Plug vent-stack openings on roof and building drains where they leave building. Introduce air into piping system equal to pressure of 1-inch wg (250 Pa). Use U-tube or manometer inserted in trap of water closet to measure this pressure. Air pressure must remain constant without

Copyright 2012 AIA MasterSpec Premium

introducing additional air throughout period of inspection. Inspect plumbing fixture connections for gas and water leaks.

5. Repair leaks and defects with new materials and retest piping, or portion thereof, until satisfactory results are obtained.
6. Prepare reports for tests and required corrective action.

3.10 CLEANING AND PROTECTION

A. Clean interior of piping. Remove dirt and debris as work progresses.

B. Protect drains during remainder of construction period to avoid clogging with dirt and debris and to prevent damage from traffic and construction work.

C. Place plugs in ends of uncompleted piping at end of day and when work stops.

D. Exposed PVC Piping: Protect plumbing vents exposed to sunlight with two coats of water-based latex paint.

3.11 PIPING SCHEDULE

A. Flanges and unions may be used on aboveground pressure piping unless otherwise indicated.

B. Aboveground, soil and waste piping NPS 4 (DN 100) and smaller shall be any of the following:

1. Service class, cast-iron soil pipe and fittings; gaskets; and gasketed joints.
2. Hubless, cast-iron soil pipe and fittings and sovent stack fittings; heavy-duty hubless-piping couplings; and coupled joints.

C. Aboveground, soil and waste piping NPS 5 (DN 125) and larger shall be any of the following:

1. Service class, cast-iron soil pipe and fittings; gaskets; and gasketed joints.
2. Hubless, cast-iron soil pipe and fittings and sovent stack fittings; heavy-duty hubless-piping couplings; and coupled joints.

D. Aboveground, vent piping NPS 4 (DN 100) and smaller shall beany of the following:

1. Service class, cast-iron soil pipe and fittings; gaskets; and gasketed joints.
2. Hubless, cast-iron soil pipe and fittings; heavy-duty hubless-piping couplings; and coupled joints.
3. Dissimilar Pipe-Material Couplings: Unshielded nonpressure transition couplings.

END OF SECTION 221316

Copyright 2013 AIA MasterSpec Premium

SECTION 221319 - SANITARY WASTE PIPING SPECIALTIES

PART 1 - GENERAL

1.1 RELATED DOCUMENTS

A. Drawings and general provisions of the Contract, including General and Supplementary Conditions and Division 01 Specification Sections, apply to this Section.

1.2 SUMMARY

A. Section Includes:

1. Backwater valves.
2. Cleanouts.
3. Floor drains.
4. Grease interceptors.

1.3 DEFINITIONS

A. ABS: Acrylonitrile-butadiene-styrene plastic.

B. FOG: Fats, oils, and greases.

C. FRP: Fiberglass-reinforced plastic.

D. HDPE: High-density polyethylene plastic.

E. PE: Polyethylene plastic.

F. PP: Polypropylene plastic.

G. PVC: Polyvinyl chloride plastic.

1.4 ACTION SUBMITTALS

A. Product Data: For each type of product indicated. Include rated capacities, operating characteristics, and accessories for the following:

1. Grease interceptors.
.

B. Shop Drawings: Show fabrication and installation details for frost-resistant vent terminals.

1. Wiring Diagrams: Power, signal, and control wiring.

Copyright 2013 AIA MasterSpec Premium

1.5 INFORMATIONAL SUBMITTALS

A. Manufacturer Seismic Qualification Certification: Submit certification that grease interceptors, accessories, and components will withstand seismic forces defined in Section 220548 "Vibration and Seismic Controls for Plumbing Piping and Equipment." Include the following:

1. Basis for Certification: Indicate whether withstand certification is based on actual test of assembled components or on calculation.

   a. The term "withstand" means "the unit will remain in place without separation of any parts from the device when subjected to the seismic forces specified."
   b. The term "withstand" means "the unit will remain in place without separation of any parts from the device when subjected to the seismic forces specified and the unit will be fully operational after the seismic event."

2. Dimensioned Outline Drawings of Equipment Unit: Identify center of gravity and locate and describe mounting and anchorage provisions.
3. Detailed description of equipment anchorage devices on which the certification is based and their installation requirements.

B. Field quality-control reports.

1.6 CLOSEOUT SUBMITTALS

A. Operation and Maintenance Data: For drainage piping specialties to include in emergency, operation, and maintenance manuals.

1.7 QUALITY ASSURANCE

A. Drainage piping specialties shall bear label, stamp, or other markings of specified testing agency.

B. Electrical Components, Devices, and Accessories: Listed and labeled as defined in NFPA 70, Article 100, by a testing agency acceptable to authorities having jurisdiction, and marked for intended use.

C. Comply with NSF 14, "Plastics Piping Components and Related Materials," for plastic sanitary piping specialty components.

1.8 COORDINATION

A. Coordinate size and location of roof penetrations.

Copyright 2013 AIA MasterSpec Premium

PART 2 - PRODUCTS

2.1 BACKWATER VALVES

A. Horizontal, Cast-Iron Backwater Valves

1. Standard: ASME A112.14.1.
2. Size: Same as connected piping.
3. Body: Cast iron.
4. Cover: Cast iron with bolted access check valve.
5. End Connections: Hubless.
6. Type Check Valve: Removable, bronze, swing check, factory assembled or field modified to hang open for airflow unless subject to backflow condition.
7. Extension: ASTM A 74, Service class; full-size, cast-iron, soil-pipe extension to field-installed cleanout at floor; replaces backwater valve cover.

B. Horizontal, Plastic Backwater Valves

1. Size: Same as connected piping.
2. Body: PVC.
3. Cover: Same material as body with threaded access to check valve.
4. Check Valve: Removable swing check.
5. End Connections: Socket type.

2.2 CLEANOUTS

1.

B. Plastic Floor Cleanouts

1. Size: Same as connected branch.
2. Body: PVC.
3. Closure Plug: PVC.
4. Riser: Drainage pipe fitting and riser to cleanout of same material as drainage piping.

2.3 FLOOR DRAINS

A. Plastic Floor Drains

1. Standard: ASME A112.6.3.
2. Material: PVC
3. Seepage Flange: Required.
4. Clamping Device: Required
5. Outlet: Bottom
6. Sediment Bucket: Not required
7. Top or Strainer Material: Stainless steel
8. Top of Body and Strainer Finish: Stainless steel
9. Top Shape: Round
10. Trap Material: Plastic drainage piping
11. Trap Pattern: Standard P-trap

Copyright 2013 AIA MasterSpec Premium

2.4 MISCELLANEOUS SANITARY DRAINAGE PIPING SPECIALTIES

A. Floor-Drain, Trap-Seal Primer Fittings

1. Description: Cast iron, with threaded inlet and threaded or spigot outlet, and trap-seal primer valve connection.
2. Size: Same as floor drain outlet with NPS 1/2 (DN 15) side inlet.

B. Air-Gap Fittings

1. Standard: ASME A112.1.2, for fitting designed to ensure fixed, positive air gap between installed inlet and outlet piping.
2. Body: Bronze or cast iron.
3. Inlet: Opening in top of body.
4. Outlet: Larger than inlet.
5. Size: Same as connected waste piping and with inlet large enough for associated indirect waste piping.

2.5 GREASE INTERCEPTORS

A. Grease Interceptors <

1. Cast-Iron or Steel Grease Interceptors:
2. Standard: ASME A112.14.3for intercepting and retaining fats, oils, and greases from food-preparation wastewater.
3. Plumbing and Drainage Institute Seal: Not required.
4. Body Material: Cast iron or steel
5. Interior Lining: Corrosion-resistant enamel
6. Exterior Coating: Corrosion-resistant enamel
7. Body Extension: Required.
8. Flow Rate: 50 GPM
9. Inlet and Outlet Size: 3”
10. End Connections: Flanged.
11. Cleanout: Integral or field installed on outlet.
12. Mounting: Recessed, flush with floor
13. Flow-Control Fitting: Required.
14. Operation: Manual cleaning

PART 3 - EXECUTION

3.1 INSTALLATION

A. Install backwater valves in building drain piping. For interior installation, provide cleanout deck plate flush with floor and centered over backwater valve cover, and of adequate size to remove valve cover for servicing.

B. Install cleanouts in aboveground piping and building drain piping according to the following, unless otherwise indicated:

Copyright 2013 AIA MasterSpec Premium

1. Size same as drainage piping up to NPS 4 (DN 100). Use NPS 4 (DN 100) for larger drainage piping unless larger cleanout is indicated.
2. Locate at each change in direction of piping greater than 45 degrees.
3. Locate at minimum intervals of 50 feet (15 m) for piping NPS 4 (DN 100) and smaller and 100 feet (30 m) for larger piping.
4. Locate at base of each vertical soil and waste stack.

C. For floor cleanouts for piping below floors, install cleanout deck plates with top flush with finished floor.

D. For cleanouts located in concealed piping, install cleanout wall access covers, of types indicated, with frame and cover flush with finished wall.

E. Install floor drains at low points of surface areas to be drained. Set grates of drains flush with finished floor, unless otherwise indicated.

1. Position floor drains for easy access and maintenance.
2. Set floor drains below elevation of surrounding finished floor to allow floor drainage. Set with grates depressed according to the following drainage area radii:

a. Radius, 30 Inches (750 mm) or Less: Equivalent to 1 percent slope, but not less than 1/4-inch (6.35-mm) total depression.
b. Radius, 30 to 60 Inches (750 to 1500 mm): Equivalent to 1 percent slope.
c. Radius, 60 Inches (1500 mm) or Larger: Equivalent to 1 percent slope, but not greater than 1-inch (25-mm) total depression.

3. Install floor-drain flashing collar or flange so no leakage occurs between drain and adjoining flooring. Maintain integrity of waterproof membranes where penetrated.
4. Install individual traps for floor drains connected to sanitary building drain, unless otherwise indicated.

F. Install fixture air-admittance valves on fixture drain piping.

G. Install stack air-admittance valves at top of stack vent and vent stack piping.

H. Install flashing fittings on sanitary stack vents and vent stacks that extend through roof.

I. Install through-penetration fire-stop assemblies in plastic conductors and stacks at floor penetrations.

J. Install deep-seal traps on floor drains and other waste outlets, if indicated.

K. Install floor-drain, trap-seal primer fittings on inlet to floor drains that require trap-seal primer connection.

1. Exception: Fitting may be omitted if trap has trap-seal primer connection.
2. Size: Same as floor drain inlet.

L. Install air-gap fittings on draining-type backflow preventers and on indirect-waste piping discharge into sanitary drainage system.

Copyright 2013 AIA MasterSpec Premium

M. Install frost-resistant vent terminals on each vent pipe passing through roof. Maintain 1-inch (25-mm) clearance between vent pipe and roof substrate.

N. Install expansion joints on vertical stacks and conductors. Position expansion joints for easy access and maintenance.

O. Install frost-proof vent caps on each vent pipe passing through roof. Maintain 1-inch (25-mm) clearance between vent pipe and roof substrate.

P. Assemble components of FOG disposal systems and install on floor. Install trap, vent, fresh-air inlet, and flow-control fitting according to authorities having jurisdiction. Install shelf fastened to reinforcement in wall construction and adjacent to unit, unless otherwise indicated. Install culture bottle, culture metering pump, timer, and control on shelf. Install tubing between culture bottle, metering pump, and chamber.

Q. Install grease interceptors, including trapping, venting, and flow-control fitting, according to authorities having jurisdiction and with clear space for servicing.
   1. Flush with Floor Installation: Set unit and extension, if required, with cover flush with finished floor.
   2. Install cleanout immediately downstream from interceptors not having integral cleanout on outlet.

R. Install traps on plumbing specialty drain outlets. Omit traps on indirect wastes unless trap is indicated.

3.2 CONNECTIONS

A. Comply with requirements in Section 221316 "Sanitary Waste and Vent Piping" for piping installation requirements. Drawings indicate general arrangement of piping, fittings, and specialties.

B. Install piping adjacent to equipment to allow service and maintenance.

C. Grease Interceptors: Connect inlet and outlet to unit, and connect flow-control fitting and vent to unit inlet piping. Install valve on outlet of automatic drawoff-type unit.

D. Connect wiring according to Section 260519 "Low-Voltage Electrical Power Conductors and Cables."

3.3 LABELING AND IDENTIFYING

A. Equipment Nameplates and Signs: Install engraved plastic-laminate equipment nameplate or sign on or near each of the following:
   1. Grease interceptors.

B. Distinguish among multiple units, inform operator of operational requirements, indicate safety and emergency precautions, and warn of hazards and improper operations, in addition to identifying unit. Nameplates and signs are specified in Section 220553 "Identification for Plumbing Piping and Equipment."

Copyright 2013 AIA MasterSpec Premium

3.4 FIELD QUALITY CONTROL

A. Perform tests and inspections and prepare test reports.

1. Manufacturer's Field Service: Engage a factory-authorized service representative to inspect field-assembled grease removal devices and their installation, including piping and electrical connections, and to assist in testing.

B. Tests and Inspections:

1. Leak Test: After installation, charge system and test for leaks. Repair leaks and retest until no leaks exist.
2. Test and adjust controls and safeties. Replace damaged and malfunctioning controls and equipment.

3.5 PROTECTION

A. Protect drains during remainder of construction period to avoid clogging with dirt or debris and to prevent damage from traffic or construction work.

B. Place plugs in ends of uncompleted piping at end of each day or when work stops.

3.6 DEMONSTRATION

A. Engage a factory-authorized service representative to train Owner's maintenance personnel to adjust, operate, and maintain grease removal devices. Refer to Section 017900 "Demonstration and Training."

END OF SECTION 221319

Copyright 2013 AIA MasterSpec Premium

SECTION 224216.16 - COMMERCIAL SINKS

PART 1 - GENERAL

1.1 RELATED DOCUMENTS

A. Drawings and general provisions of the Contract, including General and Supplementary Conditions and Division 01 Specification Sections, apply to this Section.

1.2 SUMMARY

A. Section Includes:
1. Mop sinks.
2. Kitchen sinks.
3. Handwash sinks.
4. Sink faucets.
5. Laminar-flow, faucet-spout outlets.
6. Supply fittings.
7. Waste fittings.

B. Related Requirements:

1. Section 224100 "Residential Plumbing Fixtures" for residential sinks.

1.3 ACTION SUBMITTALS

A. Product Data: For each type of product.

1. Include construction details, material descriptions, dimensions of individual components and profiles, and finishes for sinks.
2. Include rated capacities, operating characteristics, electrical characteristics, and furnished specialties and accessories.

1.4 INFORMATIONAL SUBMITTALS

A. Coordination Drawings: Counter cutout templates for mounting of counter-mounted lavatories.

1.5 CLOSEOUT SUBMITTALS

A. Maintenance Data: For sinks to include in maintenance manuals.

Copyright 2013 AIA MasterSpec Premium

1.6 MAINTENANCE MATERIAL SUBMITTALS

A. Furnish extra materials that match products installed and that are packaged with protective covering for storage and identified with labels describing contents.

1. Faucet Washers and O-Rings: Equal to 10 percent of amount of each type and size installed.
2. Faucet Cartridges and O-Rings: Equal to 5 percent of amount of each type and size installed.

PART 2 - PRODUCTS

2.1 SERVICE BASINS

A. Service
1. Fixture:

a. Standard: IAPMO PS 99.
b. Shape: Square.
c. Nominal Size: 24 by 24 inches (610 by 610 mm).
d. Height: 10 inches (255 mm).
e. Tiling Flange: Not required.
f. Rim Guard: On all top surfaces.
g. Color: Not applicable.
h. Drain: Grid with NPS 2 (DN 50) outlet.

B. Kitchen Sinks: Stainless steel, freestanding.
1. Fixture:

a. Standard: ASME A112.19.3/CSA B45.4.
b. Type: With backsplash.
c. Number of Compartments: Three.
d. Overall Dimensions: 30x100.
e. Metal Thickness: 0.050 inch (1.3 mm).
f. Compartment:

1) Dimensions: 18x64.
2) Drain: Grid with NPS 1-1/2 (DN 40) tailpiece and twist drain.
3) Drain Location: Centered in compartment.

g. Each Compartment:

1) Dimensions: 18x18.
2) Drains: Grid with NPS 1-1/2 (DN 40) tailpiece and twist drain.
3) Drain Location: Centered in compartment.

h. Drainboard(s): Leftside(s).

1) Dimensions Each:30x36.

Copyright 2013 AIA MasterSpec Premium

2. Supports: Adjustable-length steel legs.
3. Faucet(s): Wall Mounted.

   a. Number Required: Two.
   b. Mounting: On backsplash.

4. Supply Fittings:

   a. Standard: ASME A112.18.1/CSA B125.1.
   b. Supplies: Chrome-plated brass compression stop with inlet connection matching water-supply piping type and size.

      1) Operation: Wheel handle.
      2) Risers: NPS 1/2 (DN 15), chrome-plated, rigid-copper pipe.

5. Waste Fittings:

   a. Standard: ASME A112.18.2/CSA B125.2.
   b. Trap(s):

      1) Size: NPS 1-1/2 (DN 40).
      2) Material: Chrome-plated, two-piece, cast-brass trap and swivel elbow with 0.032-inch- (0.83-mm-) thick brass tube to wall; and chrome-plated brass or steel wall flange.
      3) Material: Stainless-steel, two-piece trap and swivel elbow with 0.012-inch- (0.30-mm-) thick stainless-steel tube to wall; and stainless-steel wall flange.

   c. Continuous Waste:

      1) Size: NPS 1-1/2 (DN 40).
      2) Material: Chrome-plated, 0.032-inch- (0.83-mm-) thick brass tube.

2.2 HANDWASH SINKS

A. Handwash Sinks: Stainless steel, wall mounted.
   1. Fixture:

      a. Standards: ASME A112.19.3/CSA B45.4 and NSF/ANSI 2.
      b. Type: Basin with radius corners, back for faucet, and support brackets.
      c. Nominal Size: 17 by 15 by 5 inches (432 by 406 by 127 mm).

   2. Faucet:Wall Mounted.
   3. Supply Fittings: Comply with requirements in "Supply Fittings" Article.
   4. Waste Fittings: Comply with requirements in "Waste Fittings" Article.
   5. Support: ASME A112.6.1M, Type II, sink carrier.

2.3 SINK FAUCETS

A. NSF Standard: Comply with NSF/ANSI 61 Annex G, "Drinking Water System Components - Health Effects," for faucet-spout materials that will be in contact with potable water.

Copyright 2013 AIA MasterSpec Premium

B. Sink Faucets <Insert drawing designation>: Manual type, single-control, two-lever-handle <Insert type> mixing valve.

1. Commercial, Solid-Brass Faucets.

a.
2. Standard: ASME A112.18.1/CSA B125.1.
3. General: Include hot- and cold-water indicators; coordinate faucet inlets with supplies and fixture hole punchings; coordinate outlet with spout and sink receptor.
4. Body Type: Centerset.
5. Body Material: Commercial, solid brass.
6. Finish: Chrome plated.
7. Maximum Flow Rate: 2.2 gpm (8.3 L/min.).
8. Handle(s): Wrist blade, 4 inches (102 mm).
9. Mounting Type: Back/wall, exposed.
10. Spout Type: Rigid, solid brass with wall brace.
11. Vacuum Breaker: Required for hose outlet.
12. Spout Outlet: Hose thread according to ASME B1.20.7.

2.4 SUPPLY FITTINGS

A. NSF Standard: Comply with NSF/ANSI 61 Annex G, "Drinking Water System Components - Health Effects," for supply-fitting materials that will be in contact with potable water.

B. Standard: ASME A112.18.1/CSA B125.1.

C. Supply Piping: Chrome-plated brass pipe or chrome-plated copper tube matching water-supply piping size. Include chrome-plated brass or stainless-steel wall flange.

D. Supply Stops: Chrome-plated brass, one-quarter-turn, ball-type or compression valve with inlet connection matching supply piping.

E. Operation: Wheel handle.

F. Risers:

2.5 WASTE FITTINGS

A. Standard: ASME A112.18.2/CSA B125.2.

B. Drain: Grid type with NPS 1-1/2 (DN 40) offset and straight tailpiece.

C. Trap:

1. Size: NPS 1-1/2 (DN 40).
2. Material: Chrome-plated, two-piece, cast-brass trap and swivel elbow with 0.032-inch-(0.83-mm-) thick brass tube to wall

Copyright 2013 AIA MasterSpec Premium

2.6 GROUT

A. Standard: ASTM C 1107/C 1107M, Grade B, post-hardening and volume-adjusting, dry, hydraulic-cement grout.

B. Characteristics: Nonshrink; recommended for interior and exterior applications.

C. Design Mix: 5000-psi (34.5-MPa), 28-day compressive strength.

D. Packaging: Premixed and factory packaged.

PART 3 - EXECUTION

3.1 EXAMINATION

A. Examine roughing-in of water supply and sanitary drainage and vent piping systems to verify actual locations of piping connections before sink installation.

B. Examine walls, floors, and counters for suitable conditions where sinks will be installed.

C. Proceed with installation only after unsatisfactory conditions have been corrected.

3.2 INSTALLATION

A. Install sinks level and plumb according to roughing-in drawings.

B. Install supports, affixed to building substrate, for wall-hung sinks.

C. Install accessible wall-mounted sinks at handicapped/elderly mounting height according to ICC/ANSI A117.1.

D. Set floor-mounted sinks in leveling bed of cement grout.

E. Install water-supply piping with stop on each supply to each sink faucet.

1. Exception: Use ball or gate valves if supply stops are not specified with sink. Comply with valve requirements specified in Section 220523.12 "Ball Valves for Plumbing Piping" and Section 220523.15 "Gate Valves for Plumbing Piping."
2. Install stops in locations where they can be easily reached for operation.

F. Install wall flanges or escutcheons at piping wall penetrations in exposed, finished locations. Use deep-pattern escutcheons if required to conceal protruding fittings. Comply with escutcheon requirements specified in Section 220518 "Escutcheons for Plumbing Piping."

G. Seal joints between sinks and counters, floors, and walls using sanitary-type, one-part, mildew-resistant silicone sealant. Match sealant color to fixture color. Comply with sealant requirements specified in Section 079200 "Joint Sealants."

Copyright 2013 AIA MasterSpec Premium

H. Install protective shielding pipe covers and enclosures on exposed supplies and waste piping of accessible sinks. Comply with requirements in Section 220719 "Plumbing Piping Insulation."

3.3 CONNECTIONS

A. Connect sinks with water supplies, stops, and risers, and with traps, soil, waste, and vent piping. Use size fittings required to match fixtures.

B. Comply with water piping requirements specified in Section 221116 "Domestic Water Piping."

C. Comply with soil and waste piping requirements specified in Section 221316 "Sanitary Waste and Vent Piping."

3.4 ADJUSTING

A. Operate and adjust sinks and controls. Replace damaged and malfunctioning sinks, fittings, and controls.

B. Adjust water pressure at faucets to produce proper flow.

3.5 CLEANING AND PROTECTION

A. After completing installation of sinks, inspect and repair damaged finishes.

B. Clean sinks, faucets, and other fittings with manufacturers' recommended cleaning methods and materials.

C. Provide protective covering for installed sinks and fittings.

D. Do not allow use of sinks for temporary facilities unless approved in writing by Owner.

END OF SECTION 224216.16

Copyright 2011 AIA MasterSpec Premium

SECTION 230513 - COMMON MOTOR REQUIREMENTS FOR HVAC EQUIPMENT

PART 1 - GENERAL

1.1 RELATED DOCUMENTS

A. Drawings and general provisions of the Contract, including General and Supplementary Conditions and Division 01 Specification Sections, apply to this Section.

1.2 SUMMARY

A. Section includes general requirements for single-phase and polyphase, general-purpose, horizontal, small and medium, squirrel-cage induction motors for use on ac power systems up to 600 V and installed at equipment manufacturer's factory or shipped separately by equipment manufacturer for field installation.

1.3 COORDINATION

A. Coordinate features of motors, installed units, and accessory devices to be compatible with the following:

1. Motor controllers.
2. Torque, speed, and horsepower requirements of the load.
3. Ratings and characteristics of supply circuit and required control sequence.
4. Ambient and environmental conditions of installation location.

PART 2 - PRODUCTS

2.1 GENERAL MOTOR REQUIREMENTS

A. Comply with NEMA MG 1 unless otherwise indicated.

B. Comply with IEEE 841 for severe-duty motors.

2.2 MOTOR CHARACTERISTICS

A. Duty: Continuous duty at ambient temperature of 40 deg C and at altitude of 3300 feet above sea level.

B. Capacity and Torque Characteristics: Sufficient to start, accelerate, and operate connected loads at designated speeds, at installed altitude and environment, with indicated operating sequence, and without exceeding nameplate ratings or considering service factor.

Copyright 2011 AIA MasterSpec Premium

2.3 POLYPHASE MOTORS

A. Description: NEMA MG 1, Design B, medium induction motor.

B. Efficiency: Energy efficient, as defined in NEMA MG 1.

C. Service Factor: 1.15.

D. Multispeed Motors: Variable torque.

1. For motors with 2:1 speed ratio, consequent pole, single winding.
2. For motors with other than 2:1 speed ratio, separate winding for each speed.

E. Multispeed Motors: Separate winding for each speed.

F. Rotor: Random-wound, squirrel cage.

G. Bearings: Regreasable, shielded, antifriction ball bearings suitable for radial and thrust loading.

H. Temperature Rise: Match insulation rating.

I. Insulation: Class F

J. Code Letter Designation:

1. Motors **15**HP and Larger: NEMA starting Code F or Code G.
2. Motors Smaller than 15r HP: Manufacturer's standard starting characteristic.

K. Enclosure Material: Cast iron for motor frame sizes 324T and larger; rolled steel for motor frame sizes smaller than 324T

2.4 POLYPHASE MOTORS WITH ADDITIONAL REQUIREMENTS

A. Motors Used with Reduced-Voltage and Multispeed Controllers: Match wiring connection requirements for controller with required motor leads. Provide terminals in motor terminal box, suited to control method.

B. Motors Used with Variable Frequency Controllers: Ratings, characteristics, and features coordinated with and approved by controller manufacturer.

1. Windings: Copper magnet wire with moisture-resistant insulation varnish, designed and tested to resist transient spikes, high frequencies, and short time rise pulses produced by pulse-width modulated inverters.
2. Energy- and Premium-Efficient Motors: Class B temperature rise; Class F insulation.
3. Inverter-Duty Motors: Class F temperature rise; Class H insulation.
4. Thermal Protection: Comply with NEMA MG 1 requirements for thermally protected motors.

C. Severe-Duty Motors: Comply with IEEE 841, with 1.15 minimum service factor.

Copyright 2011 AIA MasterSpec Premium

2.5 SINGLE-PHASE MOTORS

A. Motors larger than 1/20 hp shall be one of the following, to suit starting torque and requirements of specific motor application:

1. Permanent-split capacitor.
2. Split phase.
3. Capacitor start, inductor run.
4. Capacitor start, capacitor run.

B. Multispeed Motors: Variable-torque, permanent-split-capacitor type.

C. Bearings: Prelubricated, antifriction ball bearings or sleeve bearings suitable for radial and thrust loading.

D. Motors 1/20 HP and Smaller: Shaded-pole type.

E. Thermal Protection: Internal protection to automatically open power supply circuit to motor when winding temperature exceeds a safe value calibrated to temperature rating of motor insulation. Thermal-protection device shall automatically reset when motor temperature returns to normal range.

PART 3 - EXECUTION (Not Applicable)

END OF SECTION 230513

Copyright 2013 AIA MasterSpec Premium

SECTION 230553 - IDENTIFICATION FOR HVAC PIPING AND EQUIPMENT

PART 1 - GENERAL

1.1 RELATED DOCUMENTS

A. Drawings and general provisions of the Contract, including General and Supplementary Conditions and Division 01 Specification Sections, apply to this Section.

1.2 SUMMARY

A. Section Includes:

1. Equipment labels.
2. Warning signs and labels.
3. Pipe labels.
4. Duct labels.
5. Stencils.
6. Valve tags.
7. Warning tags.

1.3 ACTION SUBMITTALS

A. Product Data: For each type of product.

B. Samples: For color, letter style, and graphic representation required for each identification material and device.

C. Equipment Label Schedule: Include a listing of all equipment to be labeled with the proposed content for each label.

D. Valve numbering scheme.

E. Valve Schedules: For each piping system to include in maintenance manuals.

PART 2 - PRODUCTS

2.1 EQUIPMENT LABELS

A. Plastic Labels for Equipment:
1. Material and Thickness: Multilayer, multicolor, plastic labels for mechanical engraving, 1/16 inch thick, and having predrilled holes for attachment hardware.
2. Letter Color: White.
3. Background Color: Black.
4. Maximum Temperature: Able to withstand temperatures up to 160 deg F.

Copyright 2013 AIA MasterSpec Premium

5. Minimum Label Size: Length and width vary for required label content, but not less than 2-1/2 by 3/4 inch.
6. Minimum Letter Size: 1/4 inch or name of units if viewing distance is less than 24 inches, 1/2 inch for viewing distances up to 72 inches, and proportionately larger lettering for greater viewing distances. Include secondary lettering two-thirds to three-quarters the size of principal lettering.
7. Fasteners: Stainless-steel self-tapping screws.
8. Adhesive: Contact-type permanent adhesive, compatible with label and with substrate.

B. Label Content: Include equipment's Drawing designation or unique equipment number, Drawing numbers where equipment is indicated (plans, details, and schedules), and the Specification Section number and title where equipment is specified.

C. Equipment Label Schedule: For each item of equipment to be labeled, on 8-1/2-by-11-inch bond paper. Tabulate equipment identification number, and identify Drawing numbers where equipment is indicated (plans, details, and schedules) and the Specification Section number and title where equipment is specified. Equipment schedule shall be included in operation and maintenance data.

2.2 WARNING SIGNS AND LABELS

A. Material and Thickness: Multilayer, multicolor, plastic labels for mechanical engraving, 1/16 inch thick, and having predrilled holes for attachment hardware.

B. Letter Color: Per ANSI 13.1.

C. Background Color: Per ANSI 13.1.

D. Maximum Temperature: Able to withstand temperatures up to 160 deg F.

E. Minimum Label Size: Length and width vary for required label content, but not less than 2-1/2 by 3/4 inch.

F. Minimum Letter Size: 1/4 inch for name of units if viewing distance is less than 24 inches, 1/2 inch for viewing distances up to 72 inches, and proportionately larger lettering for greater viewing distances. Include secondary lettering two-thirds to three-quarters the size of principal lettering.

G. Fasteners: Stainless-steel self-tapping screws.

H. Adhesive: Contact-type permanent adhesive, compatible with label and with substrate.

I. Label Content: Include caution and warning information plus emergency notification instructions.

2.3 PIPE LABELS

A. General Requirements for Manufactured Pipe Labels: Preprinted, color-coded, with lettering indicating service, and showing flow direction according to ASME A13.1.

Copyright 2013 AIA MasterSpec Premium

B. Pretensioned Pipe Labels: Precoiled, semirigid plastic formed to cover full circumference of pipe and to attach to pipe without fasteners or adhesive.

C. Self-Adhesive Pipe Labels: Printed plastic with contact-type, permanent-adhesive backing.

D. Pipe Label Contents: Include identification of piping service using same designations or abbreviations as used on Drawings; also include pipe size and an arrow indicating flow direction.

1. Flow-Direction Arrows: Integral with piping system service lettering to accommodate both directions or as separate unit on each pipe label to indicate flow direction.
2. Lettering Size: Size letters according to ASME A13.1 for piping.

2.4 DUCT LABELS

A. Material and Thickness: Multilayer, multicolor, plastic labels for mechanical engraving, 1/16 inch thick, and having predrilled holes for attachment hardware.

B. Letter Color: White.

C. Background Color: Black.

D. Maximum Temperature: Able to withstand temperatures up to 160 deg F.

E. Minimum Label Size: Length and width vary for required label content, but not less than 2-1/2 by 3/4 inch.

F. Minimum Letter Size: 1/4 inch for name of units if viewing distance is less than 24 inches, 1/2 inch for viewing distances up to 72 inches, and proportionately larger lettering for greater viewing distances. Include secondary lettering two-thirds to three-quarters the size of principal lettering.

G. Fasteners: Stainless-steel self-tapping screws.

H. Adhesive: Contact-type permanent adhesive, compatible with label and with substrate.

I. Duct Label Contents: Include identification of duct service using same designations or abbreviations as used on Drawings; also include duct size and an arrow indicating flow direction.

1. Flow-Direction Arrows: Integral with duct system service lettering to accommodate both directions or as separate unit on each duct label to indicate flow direction.

2.5 STENCILS

A. Stencils for Piping:

1. Lettering Size: Size letters according to ASME A13.1 for piping.
2. Stencil Material: Fiberboard or metal.

Copyright 2013 AIA MasterSpec Premium

3. Stencil Paint: Exterior, gloss, alkyd enamel or acrylic enamel in colors complying with recommendations in ASME A13.1 unless otherwise indicated. Paint may be in pressurized spray-can form.
4. Identification Paint: Exterior, alkyd enamel or acrylic enamel in colors according to ASME A13.1 unless otherwise indicated. Paint may be in pressurized spray-can form.

B. Stencils for Ducts:
1. Lettering Size: Minimum letter height of 1-1/4 inches for viewing distances up to 15 feet and proportionately larger lettering for greater viewing distances.
2. Stencil Material: Fiberboard or metal.
3. Stencil Paint: Exterior, gloss, alkyd enamel or acrylic enamel. Paint may be in pressurized spray-can form.
4. Identification Paint: Exterior, alkyd enamel or acrylic enamel. Paint may be in pressurized spray-can form.

C. Stencils for Access Panels and Door Labels, Equipment Labels, and Similar Operational Instructions:
1. Lettering Size: Minimum letter height of 1/2 inch for viewing distances up to 72 inches and proportionately larger lettering for greater viewing distances.
2. Stencil Material: Fiberboard or metal.
3. Stencil Paint: Exterior, gloss, alkyd enamel or acrylic enamel. Paint may be in pressurized spray-can form.
4. Identification Paint: Exterior, alkyd enamel or acrylic enamel. Paint may be in pressurized spray-can form.

2.6 VALVE TAGS

A. Description: Stamped or engraved with 1/4-inch letters for piping system abbreviation and 1/2-inch numbers.

1. Tag Material: Brass, 0.032-inch minimum thickness, and having predrilled or stamped holes for attachment hardware.
2. Fasteners: Brass beaded chain.

B. Valve Schedules: For each piping system, on 8-1/2-by-11-inch bond paper. Tabulate valve number, piping system, system abbreviation (as shown on valve tag), location of valve (room or space), normal-operating position (open, closed, or modulating), and variations for identification. Mark valves for emergency shutoff and similar special uses.

1. Valve-tag schedule shall be included in operation and maintenance data.

Copyright 2013 AIA MasterSpec Premium

2.7 WARNING TAGS.

2.8 The configuration and materials of elastomeric isolation pads depends on the equipment being supported. It is possible to have more than one type of elastomeric isolation pad on same Project. Insert Drawing designation for each elastomeric isolation pad type required. Use these designations on Drawings to identify each product.

A. Description: Preprinted or partially preprinted accident-prevention tags of plasticized card stock with matte finish suitable for writing.

1. Size: 3 by 5-1/4 inches approximately 4 by 7 inches.
2. Fasteners: Brass grommet and wire.
3. Nomenclature: Large-size primary caption such as "DANGER," "CAUTION," or "DO NOT OPERATE."
4. Color: Safety-yellow background with black lettering.

PART 3 - EXECUTION

3.1 PREPARATION

A. Clean piping and equipment surfaces of substances that could impair bond of identification devices, including dirt, oil, grease, release agents, and incompatible primers, paints, and encapsulants.

3.2 GENERAL INSTALLATION REQUIREMENTS

A. Coordinate installation of identifying devices with completion of covering and painting of surfaces where devices are to be applied.

B. Coordinate installation of identifying devices with locations of access panels and doors.

C. Install identifying devices before installing acoustical ceilings and similar concealment.

3.3 EQUIPMENT LABEL INSTALLATION

A. Install or permanently fasten labels on each major item of mechanical equipment.

B. Locate equipment labels where accessible and visible.

3.4 PIPE LABEL INSTALLATION

A. Stenciled Pipe Label Option: Stenciled labels may be provided instead of manufactured pipe labels, at Installer's option. Install stenciled pipe labels, complying with ASME A13.1on each piping system.

1. Identification Paint: Use for contrasting background.

Copyright 2013 AIA MasterSpec Premium

2. Stencil Paint: Use for pipe marking.

B. Pipe Label Locations: Locate pipe labels where piping is exposed or above accessible ceilings in finished spaces; machine rooms; accessible maintenance spaces such as shafts, tunnels, and plenums; and exterior exposed locations as follows:

1. Near each valve and control device.
2. Near each branch connection, excluding short takeoffs for fixtures and terminal units. Where flow pattern is not obvious, mark each pipe at branch.
3. Near penetrations and on both sides of through walls, floors, ceilings, and inaccessible enclosures.
4. At access doors, manholes, and similar access points that permit view of concealed piping.
5. Near major equipment items and other points of origination and termination.
6. Spaced at maximum intervals of 50 feet along each run. Reduce intervals to 25 feet in areas of congested piping and equipment.
7. On piping above removable acoustical ceilings. Omit intermediately spaced labels.

C. Directional Flow Arrows: Arrows shall be used to indicate direction of flow in pipes, including pipes where flow is allowed in both directions.

D. Pipe Label Color Schedule:

1. Refrigerant Piping: Black letters on safety-orange background.

3.5 DUCT LABEL INSTALLATION

A. Install plastic-laminated duct labels with permanent adhesive on air ducts in the following color codes:

1. Blue: For cold-air supply ducts.
2. Yellow: For hot-air supply ducts.
3. Green: For exhaust-, outside-, relief-, return-, and mixed-air ducts.

B. Stenciled Duct Label Option: Stenciled labels showing service and flow direction may be provided instead of plastic-laminated duct labels, at Installer's option.

C. Locate labels near points where ducts enter into and exit from concealed spaces and at maximum intervals of 50 feet in each space where ducts are exposed or concealed by removable ceiling system.

3.6 VALVE-TAG INSTALLATION

A. Install tags on valves and control devices in piping systems, except check valves, valves within factory-fabricated equipment units, shutoff valves, faucets, convenience and lawn-watering hose connections, and HVAC terminal devices and similar roughing-in connections of end-use fixtures and units. List tagged valves in a valve schedule.

Copyright 2013 AIA MasterSpec Premium

B. Valve-Tag Application Schedule: Tag valves according to size, shape, and color scheme and with captions similar to those indicated in the following subparagraphs:

1. Valve-Tag Size and Shape:

a. Refrigerant: 2 inches.

2. Valve-Tag Colors:

a. Toxic and Corrosive Fluids: Black letters on a safety-orange background.
b. Flammable Fluids: Black letters on a safety-yellow background.
c. Combustible Fluids: White letters on a safety-brown background.
d. Potable and Other Water: White letters on a safety-green background.
e. Compressed Air: White letters on a safety-blue background.
f. Defined by User: White letters on a safety-purple background, black letters on a safety-white background, white letters on a safety-gray background, and white letters on a safety-black background

3.7 WARNING-TAG INSTALLATION

A. Write required message on, and attach warning tags to, equipment and other items where required.

END OF SECTION 230553

SECTION 230593 - TESTING, ADJUSTING, AND BALANCING FOR HVAC

PART 1 - GENERAL

1.1 RELATED DOCUMENTS

A. Drawings and general provisions of the Contract, including General and Supplementary Conditions and Division 01 Specification Sections, apply to this Section.

1.2 SUMMARY

A. Section Includes:

1. Balancing Air Systems:

   a. Constant-volume air systems.

2. Testing, Adjusting, and Balancing Equipment:

   a. Motors.
   b. Condensing units.
   c. Heat Transfer Coils.

3. Testing, adjusting, and balancing existing systems and equipment.
4. Sound tests.
5. Vibration tests.
6. Duct leakage tests.
7. Control system verification.

1.3 DEFINITIONS

A. AABC: Associated Air Balance Council.

B. BAS: Building automation systems.

C. NEBB: National Environmental Balancing Bureau.

D. TAB: Testing, adjusting, and balancing.

E. TABB: Testing, Adjusting, and Balancing Bureau.

F. TAB Specialist: An independent entity meeting qualifications to perform TAB work.

G. TDH: Total dynamic head.

1.4 INFORMATIONAL SUBMITTALS

A. Qualification Data: Within 60 days of Contractor's Notice to Proceed, submit documentation that the TAB specialist and this Project's TAB team members meet the qualifications specified in "Quality Assurance" Article.

B. Contract Documents Examination Report: Within 45 days of Contractor's Notice to Proceed, submit the Contract Documents review report as specified in Part 3.

C. Strategies and Procedures Plan: Within 60 days of Contractor's Notice to Proceed, submit TAB strategies and step-by-step procedures as specified in "Preparation" Article.

D. System Readiness Checklists: Within days of Contractor's Notice to Proceed, submit system readiness checklists as specified in "Preparation" Article.

E. Examination Report: Submit a summary report of the examination review required in "Examination" Article.

F. Certified TAB reports.

G. Sample report forms.

H. Instrument calibration reports, to include the following:

1. Instrument type and make.
2. Serial number.
3. Application.
4. Dates of use.
5. Dates of calibration.

1.5 QUALITY ASSURANCE

A. TAB Specialists Qualifications: Certified by AABC.

1. TAB Field Supervisor: Employee of the TAB specialist and certified by AABC.
2. TAB Technician: Employee of the TAB specialist and certified by AABC as a TAB technician.

B. Instrumentation Type, Quantity, Accuracy, and Calibration: Comply with requirements in ASHRAE 111, Section 4, "Instrumentation."

C. ASHRAE Compliance: Applicable requirements in ASHRAE 62.1, Section 7.2.2 - "Air Balancing."

D. ASHRAE/IESNA Compliance: Applicable requirements in ASHRAE/IESNA 90.1, Section 6.7.2.3 - "System Balancing."

1.6 FIELD CONDITIONS

A. Full Owner Occupancy: Owner will occupy the site and existing building during entire TAB period. Cooperate with Owner during TAB operations to minimize conflicts with Owner's operations.

B. Partial Owner Occupancy: Owner may occupy completed areas of building before Substantial Completion. Cooperate with Owner during TAB operations to minimize conflicts with Owner's operations.

PART 2 - PRODUCTS (Not Applicable)

PART 3 - EXECUTION

3.1 TAB SPECIALISTS

A. Subject to compliance with requirements,

3.2 EXAMINATION

A. Examine the Contract Documents to become familiar with Project requirements and to discover conditions in systems designs that may preclude proper TAB of systems and equipment.

B. Examine installed systems for balancing devices, such as test ports, gage cocks, thermometer wells, flow-control devices, balancing valves and fittings, and manual volume dampers. Verify that locations of these balancing devices are applicable for intended purpose and are accessible.

C. Examine the approved submittals for HVAC systems and equipment.

D. Examine design data including HVAC system descriptions, statements of design assumptions for environmental conditions and systems output, and statements of philosophies and assumptions about HVAC system and equipment controls.

E. Examine ceiling plenums and underfloor air plenums used for supply, return, or relief air to verify that they are properly separated from adjacent areas. Verify that penetrations in plenum walls are sealed and fire-stopped if required.

F. Examine equipment performance data including fan and pump curves.

1. Relate performance data to Project conditions and requirements, including system effects that can create undesired or unpredicted conditions that cause reduced capacities in all or part of a system.
2. Calculate system-effect factors to reduce performance ratings of HVAC equipment when installed under conditions different from the conditions used to rate equipment performance. To calculate system effects for air systems, use tables and charts found in AMCA 201, "Fans and Systems," or in SMACNA's "HVAC Systems - Duct Design." Compare results with the design data and installed conditions.

G. Examine system and equipment installations and verify that field quality-control testing, cleaning, and adjusting specified in individual Sections have been performed.

H. Examine test reports specified in individual system and equipment Sections.

I. Examine HVAC equipment and verify that bearings are greased, belts are aligned and tight, filters are clean, and equipment with functioning controls is ready for operation.

J. Examine terminal units, such as variable-air-volume boxes, and verify that they are accessible and their controls are connected and functioning.

K. Examine strainers. Verify that startup screens have been replaced by permanent screens with indicated perforations.

L. Examine control valves for proper installation for their intended function of throttling, diverting, or mixing fluid flows.

M. Examine heat-transfer coils for correct piping connections and for clean and straight fins.

N. Examine system pumps to ensure absence of entrained air in the suction piping.

O. Examine operating safety interlocks and controls on HVAC equipment.

P. Report deficiencies discovered before and during performance of TAB procedures. Observe and record system reactions to changes in conditions. Record default set points if different from indicated values.

3.3 PREPARATION

A. Prepare a TAB plan that includes the following:

1. Equipment and systems to be tested.
2. Strategies and step-by-step procedures for balancing the systems.
3. Instrumentation to be used.
4. Sample forms with specific identification for all equipment.

B. Perform system-readiness checks of HVAC systems and equipment to verify system readiness for TAB work. Include, at a minimum, the following:

1. Airside:

a. Verify that leakage and pressure tests on air distribution systems have been satisfactorily completed.
b. Duct systems are complete with terminals installed.
c. Volume, smoke, and fire dampers are open and functional.
d. Clean filters are installed.
e. Fans are operating, free of vibration, and rotating in correct direction.
f. Variable-frequency controllers' startup is complete and safeties are verified.
g. Automatic temperature-control systems are operational.
h. Ceilings are installed.
i. Windows and doors are installed.

j. Suitable access to balancing devices and equipment is provided.

2. Hydronics:

a. Verify leakage and pressure tests on water distribution systems have been satisfactorily completed.
b. Piping is complete with terminals installed.
c. Water treatment is complete.
d. Systems are flushed, filled, and air purged.
e. Strainers are pulled and cleaned.
f. Control valves are functioning per the sequence of operation.
g. Shutoff and balance valves have been verified to be 100 percent open.
h. Pumps are started and proper rotation is verified.
i. Pump gage connections are installed directly at pump inlet and outlet flanges or in discharge and suction pipe prior to valves or strainers.
j. Variable-frequency controllers' startup is complete and safeties are verified.
k. Suitable access to balancing devices and equipment is provided.

3.4 GENERAL PROCEDURES FOR TESTING AND BALANCING

A. Perform testing and balancing procedures on each system according to the procedures contained in AABC's "National Standards for Total System Balance" and in this Section.

B. Cut insulation, ducts, pipes, and equipment cabinets for installation of test probes to the minimum extent necessary for TAB procedures.

1. After testing and balancing, patch probe holes in ducts with same material and thickness as used to construct ducts.
2. After testing and balancing, install test ports and duct access doors that comply with requirements in Section 233300 "Air Duct Accessories."
3. Install and join new insulation that matches removed materials. Restore insulation, coverings, vapor barrier, and finish according to Section 230713 "Duct Insulation," Section 230716 "HVAC Equipment Insulation," and Section 230719 "HVAC Piping Insulation."

C. Mark equipment and balancing devices, including damper-control positions, valve position indicators, fan-speed-control levers, and similar controls and devices, with paint or other suitable, permanent identification material to show final settings.

D. Take and report testing and balancing measurements in inch-pound (IP) units.

3.5 GENERAL PROCEDURES FOR BALANCING AIR SYSTEMS

A. Prepare test reports for both fans and outlets. Obtain manufacturer's outlet factors and recommended testing procedures. Cross-check the summation of required outlet volumes with required fan volumes.

B. Prepare schematic diagrams of systems' "as-built" duct layouts.

C. For variable-air-volume systems, develop a plan to simulate diversity.

D. Determine the best locations in main and branch ducts for accurate duct-airflow measurements.

E. Check airflow patterns from the outdoor-air louvers and dampers and the return- and exhaust-air dampers through the supply-fan discharge and mixing dampers.

F. Locate start-stop and disconnect switches, electrical interlocks, and motor starters.

G. Verify that motor starters are equipped with properly sized thermal protection.

H. Check dampers for proper position to achieve desired airflow path.

I. Check for airflow blockages.

J. Check condensate drains for proper connections and functioning.

K. Check for proper sealing of air-handling-unit components.

L. Verify that air duct system is sealed as specified in Section 233113 "Metal Ducts."

3.6 PROCEDURES FOR CONSTANT-VOLUME AIR SYSTEMS

A. Adjust fans to deliver total indicated airflows within the maximum allowable fan speed listed by fan manufacturer.

1. Measure total airflow.

   a. Set outside-air, return-air, and relief-air dampers for proper position that simulates minimum outdoor-air conditions.
   b. Where duct conditions allow, measure airflow by Pitot-tube traverse. If necessary, perform multiple Pitot-tube traverses to obtain total airflow.
   c. Where duct conditions are not suitable for Pitot-tube traverse measurements, a coil traverse may be acceptable.
   d. If a reliable Pitot-tube traverse or coil traverse is not possible, measure airflow at terminals and calculate the total airflow.

2. Measure fan static pressures as follows:

   a. Measure static pressure directly at the fan outlet or through the flexible connection.
   b. Measure static pressure directly at the fan inlet or through the flexible connection.
   c. Measure static pressure across each component that makes up the air-handling system.
   d. Report artificial loading of filters at the time static pressures are measured.

3. Review Record Documents to determine variations in design static pressures versus actual static pressures. Calculate actual system-effect factors. Recommend adjustments to accommodate actual conditions.
4. Obtain approval from Architect or Owner, for adjustment of fan speed higher or lower than indicated speed. Comply with requirements in HVAC Sections for air-handling units

for adjustment of fans, belts, and pulley sizes to achieve indicated air-handling-unit performance.

5. Do not make fan-speed adjustments that result in motor overload. Consult equipment manufacturers about fan-speed safety factors. Modulate dampers and measure fan-motor amperage to ensure that no overload occurs. Measure amperage in full-cooling, full-heating, economizer, and any other operating mode to determine the maximum required brake horsepower.

B. Adjust volume dampers for main duct, submain ducts, and major branch ducts to indicated airflows.

1. Measure airflow of submain and branch ducts.
2. Adjust submain and branch duct volume dampers for specified airflow.
3. Re-measure each submain and branch duct after all have been adjusted.

C. Adjust air inlets and outlets for each space to indicated airflows.

1. Set airflow patterns of adjustable outlets for proper distribution without drafts.
2. Measure inlets and outlets airflow.
3. Adjust each inlet and outlet for specified airflow.
4. Re-measure each inlet and outlet after they have been adjusted.

D. Verify final system conditions.

1. Re-measure and confirm that minimum outdoor, return, and relief airflows are within design. Readjust to design if necessary.
2. Re-measure and confirm that total airflow is within design.
3. Re-measure all final fan operating data, rpms, volts, amps, and static profile.
4. Mark all final settings.
5. Test system in economizer mode. Verify proper operation and adjust if necessary.
6. Measure and record all operating data.
7. Record final fan-performance data.

3.7 PROCEDURES FOR MOTORS

A. Motors 1/2 HP and Larger: Test at final balanced conditions and record the following data:

1. Manufacturer's name, model number, and serial number.
2. Motor horsepower rating.
3. Motor rpm.
4. Phase and hertz.
5. Nameplate and measured voltage, each phase.
6. Nameplate and measured amperage, each phase.
7. Starter size and thermal-protection-element rating.
8. Service factor and frame size.

B. Motors Driven by Variable-Frequency Controllers: Test manual bypass of controller to prove proper operation.

3.8 PROCEDURES FOR CONDENSING UNITS

A. Verify proper rotation of fans.

B. Measure entering- and leaving-air temperatures.

C. Record fan and motor operating data.

3.9 PROCEDURES FOR HEAT-TRANSFER COILS

A. Measure, adjust, and record the following data for each electric heating coil:

1. Nameplate data.
2. Airflow.
3. Entering and leaving air temperature at full load.
4. Voltage and amperage unit of each phase at full load.
5. Calculated watts/kilowatt at full load.
6. Fuse or circuit-breaker rating for overload protection.

B. Measure, adjust, and record the following data for each refrigerant coil:

1. Dry-bulb temperature of entering and leaving air.
2. Wet-bulb temperature of entering and leaving air.
3. Airflow.

3.10 SOUND TESTS

A. After the systems are balanced and construction is Substantially Complete, measure and record sound levels at 5 locations as designated by the Architect.

B. Instrumentation:

1. The sound-testing meter shall be a portable, general-purpose testing meter consisting of a microphone, processing unit, and readout.
2. The sound-testing meter shall be capable of showing fluctuations at minimum and maximum levels, and measuring the equivalent continuous sound pressure level (LEQ).
3. The sound-testing meter must be capable of using 1/3 octave band filters to measure mid-frequencies from 31.5 Hz to 8000 Hz.
4. The accuracy of the sound-testing meter shall be plus or minus one decibel.

C. Test Procedures:

1. Perform test at quietest background noise period. Note cause of unpreventable sound that affects test outcome.
2. Equipment should be operating at design values.
3. Calibrate the sound-testing meter prior to taking measurements.
4. Use a microphone suitable for the type of noise levels measured that is compatible with meter. Provide a windshield for outside or in-duct measurements.
5. Record a set of background measurements in dBA and sound pressure levels in the eight un-weighted octave bands 63 Hz to 8000 Hz (NC) with the equipment off.

6. Take sound readings in dBA and sound pressure levels in the eight un-weighted octave bands 63 Hz to 8000 Hz (NC with the equipment operating.
7. Take readings no closer than 36 inches from a wall or from the operating equipment and approximately 60 inches from the floor, with the meter held or mounted on a tripod.
8. For outdoor measurements, move sound-testing meter slowly and scan area that has the most exposure to noise source being tested. Use A-weighted scale for this type of reading.

D. Reporting:

1. Report shall record the following:

   a. Location.
   b. System tested.
   c. dBA reading.
   d. Sound pressure level in each octave band with equipment on and off.

2. Plot sound pressure levels on NC worksheet with equipment on and off.

3.11 VIBRATION TESTS

A. After systems are balanced and construction is Substantially Complete, measure and record vibration levels on equipment having motor horsepower equal to or greater than 10.

B. Instrumentation:

1. Use portable, battery-operated, and microprocessor-controlled vibration meter with or without a built-in printer.
2. The meter shall automatically identify engineering units, filter bandwidth, amplitude, and frequency scale values.
3. The meter shall be able to measure machine vibration displacement in mils of deflection, velocity in inches per second, and acceleration in inches per second squared.
4. Verify calibration date is current for vibration meter before taking readings.

C. Test Procedures:

1. To ensure accurate readings, verify that accelerometer has a clean, flat surface and is mounted properly.
2. With the unit running, set up vibration meter in a safe, secure location. Connect transducer to meter with proper cables. Hold magnetic tip of transducer on top of the bearing, and measure unit in mils of deflection. Record measurement, then move transducer to the side of the bearing and record in mils of deflection. Record an axial reading in mils of deflection by holding nonmagnetic, pointed transducer tip on end of shaft.
3. Change vibration meter to velocity (inches per second) measurements. Repeat and record above measurements.
4. Record CPM or rpm.
5. Read each bearing on motor, fan, and pump as required. Track and record vibration levels from rotating component through casing to base.

D. Reporting:

1. Report shall record location and the system tested.
2. Include horizontal-vertical-axial measurements for tests.
3. Verify that vibration limits follow Specifications, or, if not specified, follow the General Machinery Vibration Severity Chart or Vibration Acceleration General Severity Chart from the AABC National Standards. Acceptable levels of vibration are normally "smooth" to "good."
4. Include in report General Machinery Vibration Severity Chart, with conditions plotted.

3.12 DUCT LEAKAGE TESTS

A. Witness the duct pressure testing performed by Installer.

B. Verify that proper test methods are used and that leakage rates are within specified tolerances.

C. Report deficiencies observed.

3.13 CONTROLS VERIFICATION

A. In conjunction with system balancing, perform the following:

1. Verify temperature control system is operating within the design limitations.
2. Confirm that the sequences of operation are in compliance with Contract Documents.
3. Verify that controllers are calibrated and function as intended.
4. Verify that controller set points are as indicated.
5. Verify the operation of lockout or interlock systems.
6. Verify the operation of valve and damper actuators.
7. Verify that controlled devices are properly installed and connected to correct controller.
8. Verify that controlled devices travel freely and are in position indicated by controller: open, closed, or modulating.
9. Verify location and installation of sensors to ensure that they sense only intended temperature, humidity, or pressure.

B. Reporting: Include a summary of verifications performed, remaining deficiencies, and variations from indicated conditions.

3.14 PROCEDURES FOR TESTING, ADJUSTING, AND BALANCING EXISTING SYSTEMS

A. Perform a preconstruction inspection of existing equipment that is to remain and be reused.

1. Measure and record the operating speed, airflow, and static pressure of each fan.
2. Measure motor voltage and amperage. Compare the values to motor nameplate information.
3. Check the refrigerant charge.
4. Check the condition of filters.
5. Check the condition of coils.
6. Check the operation of the drain pan and condensate-drain trap.

7. Check bearings and other lubricated parts for proper lubrication.
8. Report on the operating condition of the equipment and the results of the measurements taken. Report deficiencies.

B. Before performing testing and balancing of existing systems, inspect existing equipment that is to remain and be reused to verify that existing equipment has been cleaned and refurbished. Verify the following:

1. New filters are installed.
2. Coils are clean and fins combed.
3. Drain pans are clean.
4. Fans are clean.
5. Bearings and other parts are properly lubricated.
6. Deficiencies noted in the preconstruction report are corrected.

C. Perform testing and balancing of existing systems to the extent that existing systems are affected by the renovation work.

1. Compare the indicated airflow of the renovated work to the measured fan airflows, and determine the new fan speed and the face velocity of filters and coils.
2. Verify that the indicated airflows of the renovated work result in filter and coil face velocities and fan speeds that are within the acceptable limits defined by equipment manufacturer.
3. If calculations increase or decrease the airflow rates and water flow rates by more than 5 percent, make equipment adjustments to achieve the calculated rates. If increase or decrease is 5 percent or less, equipment adjustments are not required.
4. Balance each air outlet.

3.15 TOLERANCES

A. Set HVAC system's airflow rates and water flow rates within the following tolerances:

1. Supply, Return, and Exhaust Fans and Equipment with Fans: Plus or minus 10 percent.
2. Air Outlets and Inlets: Plus or minus 10 percent.

B. Maintaining pressure relationships as designed shall have priority over the tolerances specified above.

3.16 PROGRESS REPORTING

A. Initial Construction-Phase Report: Based on examination of the Contract Documents as specified in "Examination" Article, prepare a report on the adequacy of design for systems balancing devices. Recommend changes and additions to systems balancing devices to facilitate proper performance measuring and balancing. Recommend changes and additions to HVAC systems and general construction to allow access for performance measuring and balancing devices.

B. Status Reports: Prepare biweekly progress reports to describe completed procedures, procedures in progress, and scheduled procedures. Include a list of deficiencies and problems found in

systems being tested and balanced. Prepare a separate report for each system and each building floor for systems serving multiple floors.

3.17 FINAL REPORT

A. General: Prepare a certified written report; tabulate and divide the report into separate sections for tested systems and balanced systems.

1. Include a certification sheet at the front of the report's binder, signed and sealed by the certified testing and balancing engineer.
2. Include a list of instruments used for procedures, along with proof of calibration.
3. Certify validity and accuracy of field data.

B. Final Report Contents: In addition to certified field-report data, include the following:

1. Pump curves.
2. Fan curves.
3. Manufacturers' test data.
4. Field test reports prepared by system and equipment installers.
5. Other information relative to equipment performance; do not include Shop Drawings and Product Data.

C. General Report Data: In addition to form titles and entries, include the following data:

1. Title page.
2. Name and address of the TAB specialist.
3. Project name.
4. Project location.
5. Architect's name and address.
6. Engineer's name and address.
7. Contractor's name and address.
8. Report date.
9. Signature of TAB supervisor who certifies the report.
10. Table of Contents with the total number of pages defined for each section of the report. Number each page in the report.
11. Summary of contents including the following:

    a. Indicated versus final performance.
    b. Notable characteristics of systems.
    c. Description of system operation sequence if it varies from the Contract Documents.

12. Nomenclature sheets for each item of equipment.
13. Data for terminal units, including manufacturer's name, type, size, and fittings.
14. Notes to explain why certain final data in the body of reports vary from indicated values.
15. Test conditions for fans and pump performance forms including the following:

    a. Settings for outdoor-, return-, and exhaust-air dampers.
    b. Conditions of filters.
    c. Cooling coil, wet- and dry-bulb conditions.

d. Face and bypass damper settings at coils.
e. Fan drive settings including settings and percentage of maximum pitch diameter.
f. Inlet vane settings for variable-air-volume systems.
g. Settings for supply-air, static-pressure controller.
h. Other system operating conditions that affect performance.

D. System Diagrams: Include schematic layouts of air and hydronic distribution systems. Present each system with single-line diagram and include the following:

1. Quantities of outdoor, supply, return, and exhaust airflows.
2. Water and steam flow rates.
3. Duct, outlet, and inlet sizes.
4. Pipe and valve sizes and locations.
5. Terminal units.
6. Balancing stations.
7. Position of balancing devices.

E. Air-Handling-Unit Test Reports: For air-handling units with coils, include the following:

1. Unit Data:

a. Unit identification.
b. Location.
c. Make and type.
d. Model number and unit size.
e. Manufacturer's serial number.
f. Unit arrangement and class.
g. Discharge arrangement.
h. Sheave make, size in inches and bore.
i. Center-to-center dimensions of sheave and amount of adjustments in inches.
j. Number, make, and size of belts.
k. Number, type, and size of filters.

2. Motor Data:

a. Motor make, and frame type and size.
b. Horsepower and rpm.
c. Volts, phase, and hertz.
d. Full-load amperage and service factor.
e. Sheave make, size in inches and bore.
f. Center-to-center dimensions of sheave and amount of adjustments in inches.

3. Test Data (Indicated and Actual Values):

a. Total airflow rate in cfm.
b. Total system static pressure in inches wg.
c. Fan rpm.
d. Discharge static pressure in inches wg .
e. Filter static-pressure differential in inches wg.
f. Preheat-coil static-pressure differential in inches wg.
g. Cooling-coil static-pressure differential in inches wg.

h. Heating-coil static-pressure differential in inches wg.
i. Outdoor airflow in cfm.
j. Return airflow in cfm.
k. Outdoor-air damper position.
l. Return-air damper position.
m. Vortex damper position.

F. Apparatus-Coil Test Reports:

1. Coil Data:

a. System identification.
b. Location.
c. Coil type.
d. Number of rows.
e. Fin spacing in fins per inch o.c.
f. Make and model number.
g. Face area in sq. ft.
h. Tube size in NPS.
i. Tube and fin materials.
j. Circuiting arrangement.

2. Test Data (Indicated and Actual Values):

a. Airflow rate in cfm .
b. Average face velocity in fpm.
c. Air pressure drop in inches wg.
d. Outdoor-air, wet- and dry-bulb temperatures in deg F.
e. Return-air, wet- and dry-bulb temperatures in deg F.
f. Entering-air, wet- and dry-bulb temperatures in deg F.
g. Leaving-air, wet- and dry-bulb temperatures in deg F.
h. Water flow rate in gpm.
i. Water pressure differential in feet of head or psig.
j. Entering-water temperature in deg F.
k. Leaving-water temperature in deg F.
l. Refrigerant expansion valve and refrigerant types.
m. Refrigerant suction pressure in psig.
n. Refrigerant suction temperature in deg F.
o. Inlet steam pressure in psig.

G. Electric-Coil Test Reports: For electric furnaces, duct coils, and electric coils installed in central-station air-handling units, include the following:

1. Unit Data:

a. System identification.
b. Location.
c. Coil identification.
d. Capacity in Btu/h.
e. Number of stages.
f. Connected volts, phase, and hertz.

g. Rated amperage.
h. Airflow rate in cfm.
i. Face area in sq. ft..
j. Minimum face velocity in fpm.

2. Test Data (Indicated and Actual Values):

a. Heat output in Btu/h.
b. Airflow rate in cfm.
c. Air velocity in fpm.
d. Entering-air temperature in deg F.
e. Leaving-air temperature in deg F.
f. Voltage at each connection.
g. Amperage for each phase.

H. Fan Test Reports: For supply, return, and exhaust fans, include the following:

1. Fan Data:

a. System identification.
b. Location.
c. Make and type.
d. Model number and size.
e. Manufacturer's serial number.
f. Arrangement and class.
g. Sheave make, size in inches and bore.
h. Center-to-center dimensions of sheave and amount of adjustments in inches.

2. Motor Data:

a. Motor make, and frame type and size.
b. Horsepower and rpm.
c. Volts, phase, and hertz.
d. Full-load amperage and service factor.
e. Sheave make, size in inches and bore.
f. Center-to-center dimensions of sheave, and amount of adjustments in inches.
g. Number, make, and size of belts.

3. Test Data (Indicated and Actual Values):

a. Total airflow rate in cfm.
b. Total system static pressure in inches wg.
c. Fan rpm.
d. Discharge static pressure in inches wg.
e. Suction static pressure in inches wg.

I. Round, Flat-Oval, and Rectangular Duct Traverse Reports: Include a diagram with a grid representing the duct cross-section and record the following:

1. Report Data:

a. System and air-handling-unit number.
b. Location and zone.
c. Traverse air temperature in deg F.
d. Duct static pressure in inches wg.
e. Duct size in inches.
f. Duct area in sq. ft.
g. Indicated airflow rate in cfm.
h. Indicated velocity in fpm.
i. Actual airflow rate in cfm.
j. Actual average velocity in fpm.
k. Barometric pressure in psig.

J. Instrument Calibration Reports:

1. Report Data:

a. Instrument type and make.
b. Serial number.
c. Application.
d. Dates of use.
e. Dates of calibration.

3.18 VERIFICATION OF TAB REPORT

A. The TAB specialist's test and balance engineer shall conduct the inspection in the presence of Architect or Owner.

B. Architect or Owner shall randomly select measurements, documented in the final report, to be rechecked. Rechecking shall be limited to either 10 percent of the total measurements recorded or the extent of measurements that can be accomplished in a normal 8-hour business day.

C. If rechecks yield measurements that differ from the measurements documented in the final report by more than the tolerances allowed, the measurements shall be noted as "FAILED."

D. If the number of "FAILED" measurements is greater than 10 percent of the total measurements checked during the final inspection, the testing and balancing shall be considered incomplete and shall be rejected.

E. If TAB work fails, proceed as follows:

1. TAB specialists shall recheck all measurements and make adjustments. Revise the final report and balancing device settings to include all changes; resubmit the final report and request a second final inspection.
2. If the second final inspection also fails, Owner may contract the services of another TAB specialist to complete TAB work according to the Contract Documents and deduct the cost of the services from the original TAB specialist's final payment.
3. If the second verification also fails, Owner, design professional or Architect may contact AABC Headquarters regarding the AABC National Performance Guaranty.

F. Prepare test and inspection reports.

3.19 ADDITIONAL TESTS

A. Within 90 days of completing TAB, perform additional TAB to verify that balanced conditions are being maintained throughout and to correct unusual conditions.

B. Seasonal Periods: If initial TAB procedures were not performed during near-peak summer and winter conditions, perform additional TAB during near-peak summer and winter conditions.

END OF SECTION 230593

SECTION 230713 - DUCT INSULATION

PART 1 - GENERAL

1.1 RELATED DOCUMENTS

A. Drawings and general provisions of the Contract, including General and Supplementary Conditions and Division 01 Specification Sections, apply to this Section.

1.2 SUMMARY

A. Section includes insulating the following duct services:

1. Indoor, concealed supply and outdoor air.
2. Indoor, concealed, Type I, commercial, kitchen hood exhaust.
3. Indoor, concealed oven and warewash exhaust.
4. Indoor, exposed oven and warewash exhaust.
5. Indoor, concealed exhaust between isolation damper and penetration of building exterior.
6. Indoor, exposed exhaust between isolation damper and penetration of building exterior.

1.3 ACTION SUBMITTALS

A. Product Data: For each type of product indicated. Include thermal conductivity, water-vapor permeance thickness, and jackets (both factory- and field-applied if any).

B. Shop Drawings: Include plans, elevations, sections, details, and attachments to other work.

1. Detail application of protective shields, saddles, and inserts at hangers for each type of insulation and hanger.
2. Detail insulation application at elbows, fittings, dampers, specialties and flanges for each type of insulation.
3. Detail application of field-applied jackets.
4. Detail application at linkages of control devices.

C. Samples: For each type of insulation and jacket indicated. Identify each Sample, describing product and intended use. Sample sizes are as follows:

1. Sheet Form Insulation Materials: 12 inches square.
2. Sheet Jacket Materials: 12 inches square.
3. Manufacturer's Color Charts: For products where color is specified, show the full range of colors available for each type of finish material.

1.4 INFORMATIONAL SUBMITTALS

A. Qualification Data: For qualified Installer.

B. Material Test Reports: From a qualified testing agency acceptable to authorities having jurisdiction indicating, interpreting, and certifying test results for compliance of insulation materials, sealers, attachments, cements, and jackets, with requirements indicated. Include dates of tests and test methods employed.

C. Field quality-control reports.

1.5 QUALITY ASSURANCE

A. Installer Qualifications: Skilled mechanics who have successfully completed an apprenticeship program or another craft training program certified by the Department of Labor, Bureau of Apprenticeship and Training.

B. Surface-Burning Characteristics: For insulation and related materials, as determined by testing identical products according to ASTM E 84, by a testing agency acceptable to authorities having jurisdiction. Factory label insulation and jacket materials and adhesive, mastic, tapes, and cement material containers, with appropriate markings of applicable testing agency.

1. Insulation Installed Indoors: Flame-spread index of 25 or less, and smoke-developed index of 50 or less.
2. Insulation Installed Outdoors: Flame-spread index of 75 or less, and smoke-developed index of 150 or less.

C. Mockups: Before installing insulation, build mockups for each type of insulation and finish listed below to demonstrate quality of insulation application and finishes. Build mockups in the location indicated or, if not indicated, as directed by Architect. Use materials indicated for the completed Work.

1. Ductwork Mockups:

a. One 10-foot section each of rectangular and round straight duct.
b. One each of a 90-degree mitered round and rectangular elbow, and one each of a 90-degree radius round and rectangular elbow.
c. One rectangular branch takeoff and one round branch takeoff from a rectangular duct. One round tee fitting.
d. One rectangular and round transition fitting.
e. Four support hangers for round and rectangular ductwork.
f. Each type of damper and specialty.

2. For each mockup, fabricate cutaway sections to allow observation of application details for insulation materials, adhesives, mastics, attachments, and jackets.
3. Notify Architect seven days in advance of dates and times when mockups will be constructed.
4. Obtain Architect's approval of mockups before starting insulation application.
5. Approval of mockups does not constitute approval of deviations from the Contract Documents contained in mockups unless Architect specifically approves such deviations in writing.
6. Maintain mockups during construction in an undisturbed condition as a standard for judging the completed Work.
7. Demolish and remove mockups when directed.

1.6 DELIVERY, STORAGE, AND HANDLING

A. Packaging: Insulation material containers shall be marked by manufacturer with appropriate ASTM standard designation, type and grade, and maximum use temperature.

1.7 COORDINATION

A. Coordinate sizes and locations of supports, hangers, and insulation shields specified in Section 230529 "Hangers and Supports for HVAC Piping and Equipment."

B. Coordinate clearance requirements with duct Installer for duct insulation application. Before preparing ductwork Shop Drawings, establish and maintain clearance requirements for installation of insulation and field-applied jackets and finishes and for space required for maintenance.

C. Coordinate installation and testing of heat tracing.

1.8 SCHEDULING

A. Schedule insulation application after pressure testing systems and, where required, after installing and testing heat tracing. Insulation application may begin on segments that have satisfactory test results.

B. Complete installation and concealment of plastic materials as rapidly as possible in each area of construction.

PART 2 - PRODUCTS

2.1 INSULATION MATERIALS

A. Comply with requirements in "Duct Insulation Schedule, General," "Indoor Duct and Plenum Insulation Schedule," and "Aboveground, Outdoor Duct and Plenum Insulation Schedule" articles for where insulating materials shall be applied.

B. Products shall not contain asbestos, lead, mercury, or mercury compounds.

C. Products that come in contact with stainless steel shall have a leachable chloride content of less than 50 ppm when tested according to ASTM C 871.

D. Insulation materials for use on austenitic stainless steel shall be qualified as acceptable according to ASTM C 795.

E. Foam insulation materials shall not use CFC or HCFC blowing agents in the manufacturing process.

F. Flexible Elastomeric Insulation: Closed-cell, sponge- or expanded-rubber materials. Comply with ASTM C 534, Type II for sheet materials.

G. Mineral-Fiber Blanket Insulation: Mineral or glass fibers bonded with a thermosetting resin. Comply with ASTM C 553, Type II and ASTM C 1290, Type II with factory-applied vinyl jacket. Factory-applied jacket requirements are specified in "Factory-Applied Jackets" Article.

H. Mineral-Fiber Board Insulation: Mineral or glass fibers bonded with a thermosetting resin. Comply with ASTM C 612, Type IA or Type IB. For duct and plenum applications, provide insulation without factory-applied jacket. Factory-applied jacket requirements are specified in "Factory-Applied Jackets" Article.

I. Mineral-Fiber, Pipe and Tank Insulation: Mineral or glass fibers bonded with a thermosetting resin. Semirigid board material with factory-applied ASJ complying with ASTM C 1393, Type II or Type IIIA Category 2, or with properties similar to ASTM C 612, Type IB. Nominal density is 2.5 lb/cu. ft. or more. Thermal conductivity (k-value) at 100 deg F is 0.29 Btu x in./h x sq. ft. x deg F or less. Factory-applied jacket requirements are specified in "Factory-Applied Jackets" Article.

J. Polyolefin: Unicellular, polyethylene thermal plastic insulation. Comply with ASTM C 534 or ASTM C 1427, Type I, Grade 1 for tubular materials and Type II, Grade 1 for sheet materials.

2.2 FIRE-RATED INSULATION SYSTEMS

A. Fire-Rated Board: Structural-grade, press-molded, xonolite calcium silicate, fireproofing board suitable for operating temperatures up to 1700 deg F. Comply with ASTM C 656, Type II, Grade 6. Tested and certified to provide a 1 or 2-hour fire rating by an NRTL acceptable to authorities having jurisdiction.

B. Fire-Rated Blanket: High-temperature, flexible, blanket insulation with FSK jacket that is tested and certified to provide a **1 or 2**-hour fire rating by an NRTL acceptable to authorities having jurisdiction.

2.3 ADHESIVES

A. Materials shall be compatible with insulation materials, jackets, and substrates and for bonding insulation to itself and to surfaces to be insulated unless otherwise indicated.

B. Flexible Elastomeric and Polyolefin Adhesive: Comply with MIL-A-24179A, Type II, Class I.

1. For indoor applications, adhesive shall have a VOC content of 50 g/L or less when calculated according to 40 CFR 59, Subpart D (EPA Method 24).
2. Adhesive shall comply with the testing and product requirements of the California Department of Health Services' "Standard Practice for the Testing of Volatile Organic Emissions from Various Sources Using Small-Scale Environmental Chambers."

C. Mineral-Fiber Adhesive: Comply with MIL-A-3316C, Class 2, Grade A.

1. For indoor applications, adhesive shall have a VOC content of 80 g/L or less when calculated according to 40 CFR 59, Subpart D (EPA Method 24).

2. Adhesive shall comply with the testing and product requirements of the California Department of Health Services' "Standard Practice for the Testing of Volatile Organic Emissions from Various Sources Using Small-Scale Environmental Chambers."

D. ASJ Adhesive, and FSK Jacket Adhesive: Comply with MIL-A-3316C, Class 2, Grade A for bonding insulation jacket lap seams and joints.

1. For indoor applications, adhesive shall have a VOC content of 50 g/L or less when calculated according to 40 CFR 59, Subpart D (EPA Method 24).
2. Adhesive shall comply with the testing and product requirements of the California Department of Health Services' "Standard Practice for the Testing of Volatile Organic Emissions from Various Sources Using Small-Scale Environmental Chambers."

E. PVC Jacket Adhesive: Compatible with PVC jacket.

1. For indoor applications, adhesive shall have a VOC content of 50 g/L or less when calculated according to 40 CFR 59, Subpart D (EPA Method 24).
2. Adhesive shall comply with the testing and product requirements of the California Department of Health Services' "Standard Practice for the Testing of Volatile Organic Emissions from Various Sources Using Small-Scale Environmental Chambers."

2.4 MASTICS

A. Materials shall be compatible with insulation materials, jackets, and substrates; comply with MIL-PRF-19565C, Type II.

1. For indoor applications, use mastics that have a VOC content of 50 g/L or less when calculated according to 40 CFR 59, Subpart D (EPA Method 24).

B. Vapor-Barrier Mastic: Water based; suitable for indoor use on below ambient services.
1. Water-Vapor Permeance: ASTM E 96/E 96M, Procedure B, 0.013 perm at 43-mil dry film thickness.
2. Service Temperature Range: Minus 20 to plus 180 deg F.
3. Solids Content: ASTM D 1644, 58 percent by volume and 70 percent by weight.
4. Color: White.

C. Vapor-Barrier Mastic: Solvent based; suitable for indoor use on below ambient services.
1. Water-Vapor Permeance: ASTM F 1249, 0.05 perm at 35-mil dry film thickness.
2. Service Temperature Range: 0 to 180 deg F.
3. Solids Content: ASTM D 1644, 44 percent by volume and 62 percent by weight.
4. Color: White.

D. Vapor-Barrier Mastic: Solvent based; suitable for outdoor use on below ambient services.
1. Water-Vapor Permeance: ASTM F 1249, 0.05 perm at 30-mil dry film thickness.
2. Service Temperature Range: Minus 50 to plus 220 deg F.
3. Solids Content: ASTM D 1644, 33 percent by volume and 46 percent by weight.
4. Color: White.

E. Breather Mastic: Water based; suitable for indoor and outdoor use on above ambient services.
1. Water-Vapor Permeance: ASTM F 1249, 1.8 perms at 0.0625-inch dry film thickness.

2. Service Temperature Range: Minus 20 to plus 180 deg F.
3. Solids Content: 60 percent by volume and 66 percent by weight.
4. Color: White.

2.5 LAGGING ADHESIVES

A. Description: Comply with MIL-A-3316C, Class I, Grade A and shall be compatible with insulation materials, jackets, and substrates.

1. For indoor applications, use lagging adhesives that have a VOC content of 50 g/L or less when calculated according to 40 CFR 59, Subpart D (EPA Method 24).
2. Fire-resistant, water-based lagging adhesive and coating for use indoors to adhere fire-resistant lagging cloths over duct insulation.
3. Service Temperature Range: 0 to plus 180 deg F.
4. Color: White.

2.6 SEALANTS

A. FSK and Metal Jacket Flashing Sealants:
1. Materials shall be compatible with insulation materials, jackets, and substrates.
2. Fire- and water-resistant, flexible, elastomeric sealant.
3. Service Temperature Range: Minus 40 to plus 250 deg F.
4. Color: Aluminum.
5. For indoor applications, sealants shall have a VOC content of 420 g/L or less when calculated according to 40 CFR 59, Subpart D (EPA Method 24).
6. Sealants shall comply with the testing and product requirements of the California Department of Health Services' "Standard Practice for the Testing of Volatile Organic Emissions from Various Sources Using Small-Scale Environmental Chambers."

B. ASJ Flashing Sealants, and Vinyl and PVC Jacket Flashing Sealants:
1. Materials shall be compatible with insulation materials, jackets, and substrates.
2. Fire- and water-resistant, flexible, elastomeric sealant.
3. Service Temperature Range: Minus 40 to plus 250 deg F.
4. Color: White.
5. For indoor applications, sealants shall have a VOC content of 420 g/L or less when calculated according to 40 CFR 59, Subpart D (EPA Method 24).
6. Sealants shall comply with the testing and product requirements of the California Department of Health Services' "Standard Practice for the Testing of Volatile Organic Emissions from Various Sources Using Small-Scale Environmental Chambers."

2.7 FACTORY-APPLIED JACKETS

A. Insulation system schedules indicate factory-applied jackets on various applications. When factory-applied jackets are indicated, comply with the following:

1. ASJ: White, kraft-paper, fiberglass-reinforced scrim with aluminum-foil backing; complying with ASTM C 1136, Type I.

2. ASJ-SSL: ASJ with self-sealing, pressure-sensitive, acrylic-based adhesive covered by a removable protective strip; complying with ASTM C 1136, Type I.
3. FSK Jacket: Aluminum-foil, fiberglass-reinforced scrim with kraft-paper backing; complying with ASTM C 1136, Type II.
4. FSP Jacket: Aluminum-foil, fiberglass-reinforced scrim with polyethylene backing; complying with ASTM C 1136, Type II.
5. Vinyl Jacket: White vinyl with a permeance of 1.3 perms when tested according to ASTM E 96/E 96M, Procedure A, and complying with NFPA 90A and NFPA 90B.

2.8 FIELD-APPLIED FABRIC-REINFORCING MESH

A. Woven Glass-Fiber Fabric: Approximately 6 oz./sq. yd. with a thread count of 5 strands by 5 strands/sq. in. for covering ducts.

B. Woven Polyester Fabric: Approximately 1 oz./sq. yd. with a thread count of 10 strands by 10 strands/sq. in. in a Leno weave, for ducts.

2.9 FIELD-APPLIED JACKETS

A. Field-applied jackets shall comply with ASTM C 921, Type I, unless otherwise indicated.

B. FSK Jacket: Aluminum-foil-face, fiberglass-reinforced scrim with kraft-paper backing.

C. PVC Jacket: High-impact-resistant, UV-resistant PVC complying with ASTM D 1784, Class 16354-C; thickness as scheduled; roll stock ready for shop or field cutting and forming. Thickness is indicated in field-applied jacket schedules.
1. Adhesive: As recommended by jacket material manufacturer.
2. Color: Color-code jackets based on system. Color as selected by Architect.

D. Metal Jacket:
1. Aluminum Jacket: Comply with ASTM B 209, Alloy 3003, 3005, 3105, or 5005, Temper H-14.

a. Sheet and roll stock ready for shop or field sizing.
b. Finish and thickness are indicated in field-applied jacket schedules.
c. Moisture Barrier for Indoor Applications: 1-mil- thick, heat-bonded polyethylene and kraft paper 3-mil- thick, heat-bonded polyethylene and kraft paper.
d. Moisture Barrier for Outdoor Applications: 3-mil- thick, heat-bonded polyethylene and kraft paper.

E. Self-Adhesive Outdoor Jacket: 60-mil- thick, laminated vapor barrier and waterproofing membrane for installation over insulation located aboveground outdoors; consisting of a rubberized bituminous resin on a cross laminated polyethylene film covered with white or stucco-embossed aluminum-foil facing.

2.10 TAPES

A. ASJ Tape: White vapor-retarder tape matching factory-applied jacket with acrylic adhesive, complying with ASTM C 1136.
   1. Width: 3 inches.
   2. Thickness: 11.5 mils.
   3. Adhesion: 90 ounces force/inch in width.
   4. Elongation: 2 percent.
   5. Tensile Strength: 40 lbf/inch in width.
   6. ASJ Tape Disks and Squares: Precut disks or squares of ASJ tape.

B. FSK Tape: Foil-face, vapor-retarder tape matching factory-applied jacket with acrylic adhesive; complying with ASTM C 1136.
   1. Width: 3 inches.
   2. Thickness: 6.5 mils.
   3. Adhesion: 90 ounces force/inch in width.
   4. Elongation: 2 percent.
   5. Tensile Strength: 40 lbf/inch in width.
   6. FSK Tape Disks and Squares: Precut disks or squares of FSK tape.

C. PVC Tape: White vapor-retarder tape matching field-applied PVC jacket with acrylic adhesive; suitable for indoor and outdoor applications.
   1. Width: 2 inches.
   2. Thickness: 6 mils.
   3. Adhesion: 64 ounces force/inch in width.
   4. Elongation: 500 percent.
   5. Tensile Strength: 18 lbf/inch in width.

D. Aluminum-Foil Tape: Vapor-retarder tape with acrylic adhesive.
   1. Width: 2 inches.
   2. Thickness: 3.7 mils.
   3. Adhesion: 100 ounces force/inch in width.
   4. Elongation: 5 percent.
   5. Tensile Strength: 34 lbf/inch in width.

2.11 SECUREMENTS

A. Bands:

   1. Stainless Steel: ASTM A 167 or ASTM A 240/A 240M, Type 304; 0.015 inch thick, 1/2 inch wide with wing seal or closed seal.
   2. Aluminum: ASTM B 209, Alloy 3003, 3005, 3105, or 5005; Temper H-14, 0.020 inch thick, 1/2 inch wide with wing seal or closed seal.
   3. Springs: Twin spring set constructed of stainless steel with ends flat and slotted to accept metal bands. Spring size determined by manufacturer for application.

B. Insulation Pins and Hangers:

1. Capacitor-Discharge-Weld Pins: Copper- or zinc-coated steel pin, fully annealed for capacitor-discharge welding, 0.106-inch- diameter shank, length to suit depth of insulation indicated.
2. Cupped-Head, Capacitor-Discharge-Weld Pins: Copper- or zinc-coated steel pin, fully annealed for capacitor-discharge welding, 0.106-inch- diameter shank, length to suit depth of insulation indicated with integral 1-1/2-inch galvanized carbon-steel washer.

3. Insulation-Retaining Washers: Self-locking washers formed from 0.016-inch- thick, galvanized-steel sheet, with beveled edge sized as required to hold insulation securely in place but not less than 1-1/2 inches in diameter.
   a. Protect ends with capped self-locking washers incorporating a spring steel insert to ensure permanent retention of cap in exposed locations.

4. Nonmetal Insulation-Retaining Washers: Self-locking washers formed from 0.016-inch-thick nylon sheet, with beveled edge sized as required to hold insulation securely in place but not less than 1-1/2 inches in diameter.

C. Staples: Outward-clinching insulation staples, nominal 3/4-inch- wide, stainless steel or Monel.

D. Wire: 0.062-inch soft-annealed, galvanized steel.

2.12 CORNER ANGLES

A. Aluminum Corner Angles: 0.040 inch thick, minimum 1 by 1 inch, aluminum according to ASTM B 209, Alloy 3003, 3005, 3105, or 5005; Temper H-14.

PART 3 - EXECUTION

3.1 EXAMINATION

A. Examine substrates and conditions for compliance with requirements for installation tolerances and other conditions affecting performance of insulation application.

1. Verify that systems to be insulated have been tested and are free of defects.
2. Verify that surfaces to be insulated are clean and dry.

B. Proceed with installation only after unsatisfactory conditions have been corrected.

3.2 PREPARATION

A. Surface Preparation: Clean and dry surfaces to receive insulation. Remove materials that will adversely affect insulation application.

3.3 GENERAL INSTALLATION REQUIREMENTS

A. Install insulation materials, accessories, and finishes with smooth, straight, and even surfaces; free of voids throughout the length of ducts and fittings.

B. Install insulation materials, vapor barriers or retarders, jackets, and thicknesses required for each item of duct system as specified in insulation system schedules.

C. Install accessories compatible with insulation materials and suitable for the service. Install accessories that do not corrode, soften, or otherwise attack insulation or jacket in either wet or dry state.

D. Install insulation with longitudinal seams at top and bottom of horizontal runs.

E. Install multiple layers of insulation with longitudinal and end seams staggered.

F. Keep insulation materials dry during application and finishing.

G. Install insulation with tight longitudinal seams and end joints. Bond seams and joints with adhesive recommended by insulation material manufacturer.

H. Install insulation with least number of joints practical.

I. Where vapor barrier is indicated, seal joints, seams, and penetrations in insulation at hangers, supports, anchors, and other projections with vapor-barrier mastic.

1. Install insulation continuously through hangers and around anchor attachments.
2. For insulation application where vapor barriers are indicated, extend insulation on anchor legs from point of attachment to supported item to point of attachment to structure. Taper and seal ends at attachment to structure with vapor-barrier mastic.
3. Install insert materials and install insulation to tightly join the insert. Seal insulation to insulation inserts with adhesive or sealing compound recommended by insulation material manufacturer.

J. Apply adhesives, mastics, and sealants at manufacturer's recommended coverage rate and wet and dry film thicknesses.

K. Install insulation with factory-applied jackets as follows:

1. Draw jacket tight and smooth.
2. Cover circumferential joints with 3-inch- wide strips, of same material as insulation jacket. Secure strips with adhesive and outward clinching staples along both edges of strip, spaced 4 inches o.c.
3. Overlap jacket longitudinal seams at least 1-1/2 inches. Clean and dry surface to receive self-sealing lap. Staple laps with outward clinching staples along edge at 2 inches or 4 inches o.c.

   a. For below ambient services, apply vapor-barrier mastic over staples.

4. Cover joints and seams with tape, according to insulation material manufacturer's written instructions, to maintain vapor seal.
5. Where vapor barriers are indicated, apply vapor-barrier mastic on seams and joints and at ends adjacent to duct flanges and fittings.

L. Cut insulation in a manner to avoid compressing insulation more than 75 percent of its nominal thickness.

M. Finish installation with systems at operating conditions. Repair joint separations and cracking due to thermal movement.

N. Repair damaged insulation facings by applying same facing material over damaged areas. Extend patches at least 4 inches beyond damaged areas. Adhere, staple, and seal patches similar to butt joints.

3.4 PENETRATIONS

A. Insulation Installation at Roof Penetrations: Install insulation continuously through roof penetrations.

1. Seal penetrations with flashing sealant.
2. For applications requiring only indoor insulation, terminate insulation above roof surface and seal with joint sealant. For applications requiring indoor and outdoor insulation, install insulation for outdoor applications tightly joined to indoor insulation ends. Seal joint with joint sealant.
3. Extend jacket of outdoor insulation outside roof flashing at least 2 inches below top of roof flashing.
4. Seal jacket to roof flashing with flashing sealant.

B. Insulation Installation at Aboveground Exterior Wall Penetrations: Install insulation continuously through wall penetrations.

1. Seal penetrations with flashing sealant.
2. For applications requiring only indoor insulation, terminate insulation inside wall surface and seal with joint sealant. For applications requiring indoor and outdoor insulation, install insulation for outdoor applications tightly joined to indoor insulation ends. Seal joint with joint sealant.
3. Extend jacket of outdoor insulation outside wall flashing and overlap wall flashing at least 2 inches.
4. Seal jacket to wall flashing with flashing sealant.

C. Insulation Installation at Interior Wall and Partition Penetrations (That Are Not Fire Rated): Install insulation continuously through walls and partitions.

D. Insulation Installation at Fire-Rated Wall and Partition Penetrations: Terminate insulation at fire damper sleeves for fire-rated wall and partition penetrations. Externally insulate damper sleeves to match adjacent insulation and overlap duct insulation at least 2 inches.

1. Comply with requirements in Section 078413 "Penetration Firestopping" firestopping and fire-resistive joint sealers.

E. Insulation Installation at Floor Penetrations:

1. Duct: For penetrations through fire-rated assemblies, terminate insulation at fire damper sleeves and externally insulate damper sleeve beyond floor to match adjacent duct insulation. Overlap damper sleeve and duct insulation at least 2 inches.

2. Seal penetrations through fire-rated assemblies.

3.5 INSTALLATION OF FLEXIBLE ELASTOMERIC INSULATION

A. Seal longitudinal seams and end joints with manufacturer's recommended adhesive to eliminate openings in insulation that allow passage of air to surface being insulated.

3.6 INSTALLATION OF MINERAL-FIBER INSULATION

A. Blanket Insulation Installation on Ducts and Plenums: Secure with adhesive and insulation pins.

1. Apply adhesives according to manufacturer's recommended coverage rates per unit area, for 100 percent coverage of duct and plenum surfaces.
2. Apply adhesive to entire circumference of ducts and to all surfaces of fittings and transitions.
3. Install either capacitor-discharge-weld pins and speed washers or cupped-head, capacitor-discharge-weld pins on sides and bottom of horizontal ducts and sides of vertical ducts as follows:

    a. On duct sides with dimensions 18 inches and smaller, place pins along longitudinal centerline of duct. Space 3 inches maximum from insulation end joints, and 16 inches o.c.
    b. On duct sides with dimensions larger than 18 inches, place pins 16 inches o.c. each way, and 3 inches maximum from insulation joints. Install additional pins to hold insulation tightly against surface at cross bracing.
    c. Pins may be omitted from top surface of horizontal, rectangular ducts and plenums.
    d. Do not over compress insulation during installation.
    e. Impale insulation over pins and attach speed washers.
    f. Cut excess portion of pins extending beyond speed washers or bend parallel with insulation surface. Cover exposed pins and washers with tape matching insulation facing.

4. For ducts and plenums with surface temperatures below ambient, install a continuous unbroken vapor barrier. Create a facing lap for longitudinal seams and end joints with insulation by removing 2 inches from one edge and one end of insulation segment. Secure laps to adjacent insulation section with 1/2-inch outward-clinching staples, 1 inch o.c. Install vapor barrier consisting of factory- or field-applied jacket, adhesive, vapor-barrier mastic, and sealant at joints, seams, and protrusions.

    a. Repair punctures, tears, and penetrations with tape or mastic to maintain vapor-barrier seal.
    b. Install vapor stops for ductwork and plenums operating below 50 deg F at 18-foot intervals. Vapor stops shall consist of vapor-barrier mastic applied in a Z-shaped pattern over insulation face, along butt end of insulation, and over the surface. Cover insulation face and surface to be insulated a width equal to two times the insulation thickness, but not less than 3 inches.

5. Overlap unfaced blankets a minimum of 2 inches on longitudinal seams and end joints. At end joints, secure with steel bands spaced a maximum of 18 inches o.c.
6. Install insulation on rectangular duct elbows and transitions with a full insulation section for each surface. Install insulation on round and flat-oval duct elbows with individually mitered gores cut to fit the elbow.

7. Insulate duct stiffeners, hangers, and flanges that protrude beyond insulation surface with 6-inch- wide strips of same material used to insulate duct. Secure on alternating sides of stiffener, hanger, and flange with pins spaced 6 inches o.c.

B. Board Insulation Installation on Ducts and Plenums: Secure with adhesive and insulation pins.

1. Apply adhesives according to manufacturer's recommended coverage rates per unit area, for 100 percent coverage of duct and plenum surfaces.
2. Apply adhesive to entire circumference of ducts and to all surfaces of fittings and transitions.
3. Install either capacitor-discharge-weld pins and speed washers or cupped-head, capacitor-discharge-weld pins on sides and bottom of horizontal ducts and sides of vertical ducts as follows:

    a. On duct sides with dimensions 18 inches and smaller, place pins along longitudinal centerline of duct. Space 3 inches maximum from insulation end joints, and 16 inches o.c.
    b. On duct sides with dimensions larger than 18 inches, space pins 16 inches o.c. each way, and 3 inches maximum from insulation joints. Install additional pins to hold insulation tightly against surface at cross bracing.
    c. Pins may be omitted from top surface of horizontal, rectangular ducts and plenums.
    d. Do not over compress insulation during installation.
    e. Cut excess portion of pins extending beyond speed washers or bend parallel with insulation surface. Cover exposed pins and washers with tape matching insulation facing.

4. For ducts and plenums with surface temperatures below ambient, install a continuous unbroken vapor barrier. Create a facing lap for longitudinal seams and end joints with insulation by removing 2 inches from one edge and one end of insulation segment. Secure laps to adjacent insulation section with 1/2-inch outward-clinching staples, 1 inch o.c. Install vapor barrier consisting of factory- or field-applied jacket, adhesive, vapor-barrier mastic, and sealant at joints, seams, and protrusions.

    a. Repair punctures, tears, and penetrations with tape or mastic to maintain vapor-barrier seal.
    b. Install vapor stops for ductwork and plenums operating below 50 deg F at 18-foot intervals. Vapor stops shall consist of vapor-barrier mastic applied in a Z-shaped pattern over insulation face, along butt end of insulation, and over the surface. Cover insulation face and surface to be insulated a width equal to two times the insulation thickness, but not less than 3 inches.

5. Install insulation on rectangular duct elbows and transitions with a full insulation section for each surface. Groove and score insulation to fit as closely as possible to outside and inside radius of elbows. Install insulation on round and flat-oval duct elbows with individually mitered gores cut to fit the elbow.
6. Insulate duct stiffeners, hangers, and flanges that protrude beyond insulation surface with 6-inch- wide strips of same material used to insulate duct. Secure on alternating sides of stiffener, hanger, and flange with pins spaced 6 inches o.c.

3.7 FIELD-APPLIED JACKET INSTALLATION

A. Where glass-cloth jackets are indicated, install directly over bare insulation or insulation with factory-applied jackets.

1. Draw jacket smooth and tight to surface with 2-inch overlap at seams and joints.
2. Embed glass cloth between two 0.062-inch- thick coats of lagging adhesive.
3. Completely encapsulate insulation with coating, leaving no exposed insulation.

B. Where FSK jackets are indicated, install as follows:

1. Draw jacket material smooth and tight.
2. Install lap or joint strips with same material as jacket.
3. Secure jacket to insulation with manufacturer's recommended adhesive.
4. Install jacket with 1-1/2-inch laps at longitudinal seams and 3-inch wide joint strips at end joints.
5. Seal openings, punctures, and breaks in vapor-retarder jackets and exposed insulation with vapor-barrier mastic.

C. Where PVC jackets are indicated, install with 1-inch overlap at longitudinal seams and end joints; for horizontal applications, install with longitudinal seams along top and bottom of tanks and vessels. Seal with manufacturer's recommended adhesive.

1. Apply two continuous beads of adhesive to seams and joints, one bead under lap and the finish bead along seam and joint edge.

D. Where metal jackets are indicated, install with 2-inch overlap at longitudinal seams and end joints. Overlap longitudinal seams arranged to shed water. Seal end joints with weatherproof sealant recommended by insulation manufacturer. Secure jacket with stainless-steel bands 12 inches o.c. and at end joints.

3.8 FIRE-RATED INSULATION SYSTEM INSTALLATION

A. Where fire-rated insulation system is indicated, secure system to ducts and duct hangers and supports to maintain a continuous fire rating.

B. Insulate duct access panels and doors to achieve same fire rating as duct.

C. Install firestopping at penetrations through fire-rated assemblies. Fire-stop systems are specified in Section 078413 "Penetration Firestopping."

3.9 FINISHES

A. Insulation with ASJ, Glass-Cloth, or Other Paintable Jacket Material: Paint jacket with paint system identified below and as specified in Section 099113 "Exterior Painting" and Section 099123 "Interior Painting."

1. Flat Acrylic Finish: Two finish coats over a primer that is compatible with jacket material and finish coat paint. Add fungicidal agent to render fabric mildew proof.

a. Finish Coat Material: Interior, flat, latex-emulsion size.

B. Flexible Elastomeric Thermal Insulation: After adhesive has fully cured, apply two coats of insulation manufacturer's recommended protective coating.

C. Color: Final color as selected by Architect. Vary first and second coats to allow visual inspection of the completed Work.

D. Do not field paint aluminum or stainless-steel jackets.

3.10 FIELD QUALITY CONTROL

A. Testing Agency: Engage a qualified testing agency to perform tests and inspections.

B. Perform tests and inspections.

C. Tests and Inspections:

1. Inspect ductwork, randomly selected by Architect, by removing field-applied jacket and insulation in layers in reverse order of their installation. Extent of inspection shall be limited to **one** location(s) for each duct system defined in the "Duct Insulation Schedule, General" Article.

D. All insulation applications will be considered defective Work if sample inspection reveals noncompliance with requirements.

3.11 DUCT INSULATION SCHEDULE, GENERAL

A. Plenums and Ducts Requiring Insulation:

1. Indoor, concealed supply and outdoor air.
2. Indoor, concealed, Type I, commercial, kitchen hood exhaust.
3. Indoor, concealed oven and warewash exhaust.
4. Indoor, exposed oven and warewash exhaust.
5. Indoor, concealed exhaust between isolation damper and penetration of building exterior.
6. Indoor, exposed exhaust between isolation damper and penetration of building exterior.

B. Items Not Insulated:

1. Fibrous-glass ducts.
2. Metal ducts with duct liner of sufficient thickness to comply with energy code and ASHRAE/IESNA 90.1.
3. Factory-insulated flexible ducts.
4. Factory-insulated plenums and casings.
5. Flexible connectors.
6. Vibration-control devices.
7. Factory-insulated access panels and doors.

3.12 INDOOR DUCT AND PLENUM INSULATION SCHEDULE

A. Concealed, round and flat-oval, supply-air duct insulation shall be the following:
   1. Mineral-Fiber Blanket: 1-1/2 inches thick and 0.75-lb/cu. ft. nominal density.

B. Concealed, round and flat-oval, return-air duct insulation shall be the following:
   1. Mineral-Fiber Blanket: 1-1/2 inches thick and 0.75-lb/cu. ft. nominal density.

C. Concealed, round and flat-oval, outdoor-air duct insulation shall be the following:
   1. Mineral-Fiber Blanket: 1-1/2 inches thick and 0.75-lb/cu. ft. nominal density.

D. Concealed, round and flat-oval, exhaust air duct insulation shall be the following:
   1. Mineral-Fiber Blanket: 1-1/2 inches thick and 0.75-lb/cu. ft. nominal density.

E. Concealed, rectangular, supply-air duct insulation shall be the following:
   1. Mineral-Fiber Blanket: 1-1/2 inches thick and 0.75-lb/cu. ft. nominal density.

F. Concealed, rectangular, return-air duct insulation shall be the following:
   1. Mineral-Fiber Blanket: 1-1/2 inches thick and 0.75-lb/cu. ft. nominal density.

G. Concealed, rectangular, outdoor-air duct insulation shall be the following:
   1. Mineral-Fiber Blanket: 1-1/2 inches thick and 0.75-lb/cu. ft. nominal density.

H. Concealed, rectangular, exhaust-air duct insulation between isolation damper and penetration of building exterior shall be the following:
   1. Mineral-Fiber Blanket: 1-1/2 inches thick and 0.75-lb/cu. ft. nominal density.

I. Concealed, Type I, Commercial, Kitchen Hood Exhaust Duct and Plenum Insulation: Fire-rated blanket; thickness as required to achieve 2-hour fire rating.

J. Concealed, supply-air plenum insulation shall be the following:
   1. Mineral-Fiber Blanket: 1-1/2 inches thick and 0.75-lb/cu. ft. nominal density.

K. Concealed, return-air plenum insulation shall be the following:
   1. Mineral-Fiber Blanket: 1-1/2 inches thick and 0.75-lb/cu. ft. nominal density.

L. Concealed, outdoor-air plenum insulation shall be the following:

   1. Mineral-Fiber Blanket: 1-1/2 inches thick and 0.75-lb/cu. ft. nominal density.

M. Concealed, exhaust-air plenum insulation shall be the following:

   1. Mineral-Fiber Blanket: 1-1/2 inches thick and 0.75-lb/cu. ft. nominal density.

N. Exposed, round and flat-oval, supply-air duct insulation shall be the following:
   1. Mineral-Fiber Blanket: 1-1/2 inches thick and 0.75-lb/cu. ft. nominal density.

O. Exposed, round and flat-oval, return-air duct insulation shall be the following:
   1. Mineral-Fiber Blanket: 1-1/2 inches thick and 0.75-lb/cu. ft. nominal density.

P. Exposed, round and flat-oval, outdoor-air duct insulation shall be the following:
   1. Mineral-Fiber Blanket: 1-1/2 inches thick and 0.75-lb/cu. ft. nominal density.

Q. Exposed, round and flat-oval, exhaust-air duct insulation shall be the following:
   1. Mineral-Fiber Blanket: 1-1/2 inches thick and 0.75-lb/cu. ft nominal density.

R. Exposed, rectangular, supply-air duct insulation shall be the following:
   1. Mineral-Fiber Blanket: 1-1/2 inches thick and 0.75-lb/cu. ft. nominal density.

S. Exposed, rectangular, return-air duct insulation shall be the following:
   1. Mineral-Fiber Blanket: 1-1/2 inches thick and 0.75-lb/cu. ft. nominal density.

T. Exposed, rectangular, outdoor-air duct insulation shall be the following:
   1. Mineral-Fiber Blanket: 1-1/2 inches thick and 0.75-lb/cu. ft. nominal density.

U. Exposed, rectangular, exhaust-air duct insulation shall be the following:
   1. Mineral-Fiber Blanket: 1-1/2 inches thick and 0.75-lb/cu. ft. nominal density.

V. Exposed, Type I, Commercial, Kitchen Hood Exhaust Duct and Plenum Insulation: Fire-rated blanket; thickness as required to achieve 2-hour fire rating.

W. Exposed, supply-air plenum insulation shall be the following:
   1. Mineral-Fiber Blanket: 1-1/2 inches thick and 0.75-lb/cu. ft. nominal density.

X. Exposed, return-air plenum insulation shall be the following:
   1. Mineral-Fiber Blanket: 1-1/2 inches thick and 0.75-lb/cu. ft. nominal density.

Y. Exposed, outdoor-air plenum insulation shall be the following:

   1. Mineral-Fiber Blanket: 1-1/2 inches thick and 0.75-lb/cu. ft. nominal density.

Z. Exposed, exhaust-air plenum insulation shall be the following:

   1. Mineral-Fiber Blanket: 1-1/2 inches thick and 0.75-lb/cu. ft. nominal density.

3.13 INDOOR, FIELD-APPLIED JACKET SCHEDULE

A. Install jacket over insulation material. For insulation with factory-applied jacket, install the field-applied jacket over the factory-applied jacket.

B. If more than one material is listed, selection from materials listed is Contractor's option.

C. Ducts and Plenums, Concealed:

   1. None.
   2. PVC, Color-Coded by System: 20 mils thick.
   3. Aluminum, Smooth, Corrugated, Stucco Embossed: 0.016 inch thick.

D. Ducts and Plenums, Exposed:
   1. PVC, Color-Coded by System: 20 mils thick.
   2. Aluminum, Smooth, Corrugated, Stucco Embossed: 0.016 inch thick.

END OF SECTION 230713

Copyright 2013 AIA MasterSpec Premium

SECTION 230800 - COMMISSIONING OF HVAC

PART 1 - GENERAL

1.1 RELATED DOCUMENTS

A. Drawings and general provisions of the Contract, including General and Supplementary Conditions and other Division 01 Specification Sections, apply to this Section.

1.2 SUMMARY

A. Section includes commissioning process requirements for the following HVAC&R systems, assemblies, and equipment:
   1. Cooling generation systems, including direct-expansion systems.
   2. Distribution systems, including air distribution (heating and cooling) systems exhaust systems and air-handling units.
   3. Terminal and packaged units, including unit ventilators, unit heaters and electric heating.
   4. Vibration and sound systems, including sound attenuation and vibration isolation devices.
   5. Controls and Instrumentation, including BAS.
   6. Systems testing and balancing verification, including supply-air systems return-air systems exhaust-air systems.

B. Related Requirements:

   1. Section 019113 "General Commissioning Requirements" for general commissioning process requirements and Commissioning Coordinator responsibilities.

1.3 DEFINITIONS

A. BAS: Building automation system.

B. DDC: Direct digital controls.

C. HVAC&R: Heating, Ventilating, Air Conditioning, and Refrigeration.

D. "Systems," "Subsystems," "Equipment," and "Components": Where these terms are used together or separately, they shall mean "as-built" systems, subsystems, equipment, and components.

E. TAB: Testing, adjusting, and balancing.

1.4 INFORMATIONAL SUBMITTALS

A. Qualification Data: For BAS and HVAC & R Testing Technician.

Copyright 2013 AIA MasterSpec Premium

B. Construction Checklists: See related Sections for technical requirements for the following construction checklists:

1. Vibration and seismic controls for HVAC&R piping and equipment.
2. Instrumentation and control for HVAC&R.
3. Refrigerant piping.
4. Metal ducts and accessories.
5. Fans.
6. Particulate air filtration.
7. Air-handling units.

1.5 QUALITY ASSURANCE

A. BAS Testing Technician Qualifications: Technicians to perform BAS construction checklist verification tests, construction checklist verification test demonstrations, commissioning tests, and commissioning test demonstrations shall have the following minimum qualifications:

1. Journey-level or equivalent skill level with knowledge of BAS, HVAC&R, electrical concepts, and building operations.
2. Minimum three years' experience installing, servicing, and operating systems manufactured by approved manufacturer.
3. International Society of Automation (ISA) Certified Control Systems Technician (CCST) Level I.

B. HVAC&R Testing Technician Qualifications: Technicians to perform HVAC&R construction checklist verification tests, construction checklist verification test demonstrations, commissioning tests, and commissioning test demonstrations shall have the following minimum qualifications:

1. Journey-level or equivalent skill level. Vocational School four-year program graduate or an Associates degree in mechanical systems, air conditioning, or similar field. Degree may be offset by three years' experience in servicing mechanical systems in the HVAC industry. Generally, required knowledge includes HVAC&R systems, electrical concepts, building operations, and application and use of tools and instrumentation to measure performance of HVAC&R equipment, assemblies, and systems.
2. Minimum three years' experience installing, servicing, and operating systems manufactured by approved manufacturer.
3. One of the following:

   a. National Environmental Balancing Bureau (NEBB) Certified Testing, Adjusting, and Balancing Technician.
   b. Associated Air Balance Council (AABC) Certified Test and Balance Technician.
   c. Owner retains the right to waive NEBB or AABC Certification.

C. Testing Equipment and Instrumentation Quality and Calibration: For test equipment and instrumentation required to perform HVAC&R commissioning work, perform the following:

1. Submit test equipment and instrumentation list. For each equipment or instrument, identify the following:

Copyright 2013 AIA MasterSpec Premium

a. Equipment/instrument identification number.
b. Planned commissioning application or use.
c. Manufacturer, make, model, and serial number.
d. Calibration history, including certificates from agencies that calibrate the equipment and instrumentation.

2. Test equipment and instrumentation shall meet the following criteria:

a. Capable of testing and measuring performance within the specified acceptance criteria.
b. Be calibrated at the manufacturer's recommended intervals with current calibration tags permanently affixed to the instrument being used.
c. Be maintained in good repair and operating condition throughout the duration of use on this Project.
d. Be recalibrated/repaired if dropped or damaged in any way since last calibrated.

D. Proprietary Test Instrumentation and Tools:

1. Equipment Manufacturer's Proprietary Instrumentation and Tools: For installed equipment included in the commissioning process, test instrumentation and tools manufactured or prescribed by equipment manufacturer to service, calibrate, adjust, repair, or otherwise work on its equipment or required as a condition of equipment warranty, perform the following:

a. Submit proprietary instrumentation and tools list. For each instrument or tool, identify the following:

1) Instrument or tool identification number.
2) Equipment schedule designation of equipment for which the instrument or tool is required.
3) Manufacturer, make, model, and serial number.
4) Calibration history, including certificates from agencies that calibrate the instrument or tool, where appropriate.

b. Include a separate list of proprietary test instrumentation and tools in the operation and maintenance manuals.
c. HVAC&R proprietary test instrumentation and tools become the property of Owner at the time of Substantial Completion.

PART 2 - PRODUCTS (Not Used)

PART 3 - EXECUTION

3.1 GENERAL TESTING REQUIREMENTS

A. Certify that HVAC&R systems, subsystems, and equipment have been installed, calibrated, and started and are operating according to the Contract Documents and approved Shop Drawings and submittals.

Copyright 2013 AIA MasterSpec Premium

B. Certify that HVAC&R instrumentation and control systems have been completed and calibrated, that they are operating according to the Contract Documents and approved Shop Drawings and submittals, and that pretest set points have been recorded.

C. Certify that TAB procedures have been completed and that TAB reports have been submitted, discrepancies corrected, and corrective work approved.

D. Set systems, subsystems, and equipment into operating mode to be tested according to approved test procedures (e.g., normal shutdown, normal auto position, normal manual position, unoccupied cycle, emergency power, and alarm conditions).

E. Measure capacities and effectiveness of systems, assemblies, subsystems, equipment, and components, including operational and control functions to verify compliance with acceptance criteria.

F. Test systems, assemblies, subsystems, equipment, and components operating modes, interlocks, control responses, and responses to abnormal or emergency conditions, and response according to acceptance criteria.

G. Construction Checklists: Prepare and submit detailed construction checklists for HVAC&R systems, subsystems, equipment, and components.

1. Contributors to the development of construction checklists shall include, but are not limited to, the following:

a. HVAC&R systems and equipment installers.
b. TAB technicians.
c. HVAC&R instrumentation and controls installers.

H. Perform tests using design conditions, whenever possible.

1. Simulated conditions may, with approval of Architect, be imposed using an artificial load when it is impractical to test under design conditions. Before simulating conditions, calibrate testing instruments. Provide equipment to simulate loads. Set simulated conditions as directed by Commissioning Coordinator and document simulated conditions and methods of simulation. After tests, return configurations and settings to normal operating conditions.
2. Commissioning test procedures may direct that set points be altered when simulating conditions is impractical.
3. Commissioning test procedures may direct that sensor values be altered with a signal generator when design or simulating conditions and altering set points are impractical.

I. If tests cannot be completed because of a deficiency outside the scope of the HVAC&R system, document the deficiency and report it to Owner. After deficiencies are resolved, reschedule tests.

J. If seasonal testing is specified, complete appropriate initial performance tests and documentation and schedule seasonal tests.

K. Coordinate schedule with, and perform the following activities at the direction of, Commissioning Coordinator.

Copyright 2013 AIA MasterSpec Premium

L. Comply with construction checklist requirements, including material verification, installation checks, start-up, and performance tests requirements specified in Sections specifying HVAC systems and equipment.

M. Provide technicians, instrumentation, tools, and equipment to complete and document the following:

1. Performance tests.
2. Demonstration of a sample of performance tests.
3. Commissioning tests.
4. Commissioning test demonstrations.

3.2 TAB COMMISSIONING TESTS

A. TAB Verification:

1. Prerequisites: Completion of "Examination" Article requirements and correction of deficiencies, as specified in Section 230593 "Testing, Adjusting, and Balancing for HVAC."
2. Completion of "Preparation" Article requirements for preparation of a TAB plan that includes strategies and step-by-step procedures, and system-readiness checks and reports, as specified in Section 230593 "Testing, Adjusting, and Balancing for HVAC."
3. Scope: HVAC&R air systems.
4. Purpose: Differential flow relationships intended to maintain air pressurization differentials between the various areas of Project.
5. Conditions of the Test:

   a. Commissioning Test Demonstration Sampling Rate: As specified in "Inspections" Article in Section 230593 "Testing, Adjusting, and Balancing for HVAC."
   b. Systems operating in full heating mode with minimum outside-air volume.
   c. Systems operating in full cooling mode with minimum outside-air volume.

6. Acceptance Criteria:

   a. Under all conditions, rechecked measurements comply with "Inspections" Article in Section 230593 "Testing, Adjusting, and Balancing for HVAC."
   b. Additionally, no rechecked measurement shall differ from measurements documented in the final report by more than two times the tolerances allowed.
   c. Under all conditions, where the Contract Documents indicate a differential in airflow between supply and exhaust and/or return in a space, the differential relationship shall be maintained.

END OF SECTION 230800

CASEY COMMUNITY CENTER
INTERIOR RENOVATION PROJECT

SECTION 232300 - REFRIGERANT PIPING

PART 1 - GENERAL

1.1 RELATED DOCUMENTS

A. Drawings and general provisions of the Contract, including General and Supplementary Conditions and Division 01 Specification Sections, apply to this Section.

1.2 SUMMARY

A. Section Includes:

1. Refrigerant pipes and fittings.
2. Refrigerant piping valves and specialties.
3. Refrigerants.

1.3 ACTION SUBMITTALS

A. Product Data: For each type of valve and refrigerant piping specialty.

1. Include pressure drop, based on manufacturer's test data, for the following:

a. Thermostatic expansion valves.
b. Solenoid valves.
c. Hot-gas bypass valves.
d. Filter dryers.
e. Strainers.
f. Pressure-regulating valves.

B. Shop Drawings:

1. Show layout of refrigerant piping and specialties, including pipe, tube, and fitting sizes; flow capacities; valve arrangements and locations; slopes of horizontal runs; oil traps; double risers; wall and floor penetrations; and equipment connection details.
2. Show piping size and piping layout, including oil traps, double risers, specialties, and pipe and tube sizes to accommodate, as a minimum, equipment provided, elevation difference between compressor and evaporator, and length of piping to ensure proper operation and compliance with warranties of connected equipment.
3. Show interface and spatial relationships between piping and equipment.
4. Shop Drawing Scale: 1/4 inch equals 1 foot 1:50.

1.4 INFORMATIONAL SUBMITTALS

A. Welding certificates.

B. Field quality-control reports.

1.5 CLOSEOUT SUBMITTALS

A. Operation and Maintenance Data: For refrigerant valves and piping specialties to include in maintenance manuals.

1.6 QUALITY ASSURANCE

A. Welding Qualifications: Qualify procedures and personnel according to 2010 ASME Boiler and Pressure Vessel Code: Section IX, "Welding and Brazing Qualifications."

B. Comply with ASHRAE 15, "Safety Code for Refrigeration Systems."

C. Comply with ASME B31.5, "Refrigeration Piping and Heat Transfer Components."

1.7 PRODUCT STORAGE AND HANDLING

A. Store piping with end caps in place to ensure that piping interior and exterior are clean when installed.

PART 2 - PRODUCTS

2.1 PERFORMANCE REQUIREMENTS

A. Line Test Pressure for Refrigerant R-410A:

1. Suction Lines for Air-Conditioning Applications: 300 psig.
2. Suction Lines for Heat-Pump Applications: 535 psig.
3. Hot-Gas and Liquid Lines: 535 psig.

2.2 COPPER TUBE AND FITTINGS

A. Copper Tube: Type ACR.

B. Wrought-Copper Fittings: ASME B16.22.

C. Wrought-Copper Unions: ASME B16.22.

D. Solder Filler Metals: ASTM B 32. Use 95-5 tin antimony or alloy HB solder to join copper socket fittings on copper pipe.

E. Brazing Filler Metals: AWS A5.8/A5.8M.

F. Flexible Connectors

1. Body: Tin-bronze bellows with woven, flexible, tinned-bronze-wire-reinforced protective jacket .
2. End Connections: Socket ends.
3. Offset Performance: Capable of minimum 3/4-inch misalignment in minimum 7-inch long assembly.
4. Working Pressure Rating: Factory test at minimum 500 psig.
5. Maximum Operating Temperature: 250 deg F.

2.3 VALVES AND SPECIALTIES

A. Diaphragm Packless Valves:

1. Body and Bonnet: Forged brass or cast bronze; globe design with straight-through or angle pattern.
2. Diaphragm: Phosphor bronze and stainless steel with stainless-steel spring.
3. Operator: Rising stem and hand wheel.
4. Seat: Nylon.
5. End Connections: Socket, union, or flanged.
6. Working Pressure Rating: 500 psig.
7. Maximum Operating Temperature: 275 deg F.

B. Packed-Angle Valves:

1. Body and Bonnet: Forged brass or cast bronze.
2. Packing: Molded stem, back seating, and replaceable under pressure.
3. Operator: Rising stem.
4. Seat: Nonrotating, self-aligning polytetrafluoroethylene.
5. Seal Cap: Forged-brass or valox hex cap.
6. End Connections: Socket, union, threaded, or flanged.
7. Working Pressure Rating: 500 psig.
8. Maximum Operating Temperature: 275 deg F.

C. Check Valves:

1. Body: Ductile iron, forged brass, or cast bronze; globe pattern.
2. Bonnet: Bolted ductile iron, forged brass, or cast bronze; or brass hex plug.
3. Piston: Removable polytetrafluoroethylene seat.
4. Closing Spring: Stainless steel.
5. Manual Opening Stem: Seal cap, plated-steel stem, and graphite seal.
6. End Connections: Socket, union, threaded, or flanged.
7. Maximum Opening Pressure: 0.50 psig.
8. Working Pressure Rating: 500 psig.
9. Maximum Operating Temperature: 275 deg F.

D. Service Valves:

1. Body: Forged brass with brass cap including key end to remove core.
2. Core: Removable ball-type check valve with stainless-steel spring.
3. Seat: Polytetrafluoroethylene.
4. End Connections: Copper spring.
5. Working Pressure Rating: 500 psig.

E. Solenoid Valves: Comply with AHRI 760 and UL 429; listed and labeled by a National Recognized Testing Laboratory (NRTL).

1. Body and Bonnet: Plated steel.
2. Solenoid Tube, Plunger, Closing Spring, and Seat Orifice: Stainless steel.
3. Seat: Polytetrafluoroethylene.
4. End Connections: Threaded.
5. Electrical: Molded, watertight coil in NEMA 250 enclosure of type required by location with 1/2-inch conduit adapter, and 24V ac coil.
6. Working Pressure Rating: 400 psig.
7. Maximum Operating Temperature: 240 deg F.

F. Safety Relief Valves: Comply with 2010 ASME Boiler and Pressure Vessel Code; listed and labeled by an NRTL.

1. Body and Bonnet: Ductile iron and steel, with neoprene O-ring seal.
2. Piston, Closing Spring, and Seat Insert: Stainless steel.
3. Seat: Polytetrafluoroethylene.
4. End Connections: Threaded.
5. Working Pressure Rating: 400 psig.
6. Maximum Operating Temperature: 240 deg F.

G. Thermostatic Expansion Valves: Comply with AHRI 750.

1. Body, Bonnet, and Seal Cap: Forged brass or steel.
2. Diaphragm, Piston, Closing Spring, and Seat Insert: Stainless steel.
3. Packing and Gaskets: Non-asbestos.
4. Capillary and Bulb: Copper tubing filled with refrigerant charge.
5. Suction Temperature: 40 deg F.
6. Superheat: Adjustable..
7. Reverse-flow option (for heat-pump applications).
8. End Connections: Socket, flare, or threaded union.
9. Working Pressure Rating: 700 psig.

H. Hot-Gas Bypass Valves: Comply with UL 429; listed and labeled by an NRTL.

1. Body, Bonnet, and Seal Cap: Ductile iron or steel.
2. Diaphragm, Piston, Closing Spring, and Seat Insert: Stainless steel.
3. Packing and Gaskets: Non-asbestos.
4. Solenoid Tube, Plunger, Closing Spring, and Seat Orifice: Stainless steel.
5. Seat: Polytetrafluoroethylene.

6. Equalizer: Internal.
7. Electrical: Molded, watertight coil in NEMA 250 enclosure of type required by location with 1/2-inch conduit adapter and 24, 115 or 208-V ac coil.
8. End Connections: Socket.
9. Throttling Range: Maximum 5 psig.
10. Working Pressure Rating: 500 psig.
11. Maximum Operating Temperature: 240 deg F.

I. Straight-Type Strainers:

1. Body: Welded steel with corrosion-resistant coating.
2. Screen: 100-mesh stainless steel.
3. End Connections: Socket or flare.
4. Working Pressure Rating: 500 psig.
5. Maximum Operating Temperature: 275 deg F.

J. Angle-Type Strainers:

1. Body: Forged brass or cast bronze.
2. Drain Plug: Brass hex plug.
3. Screen: 100-mesh monel.
4. End Connections: Socket or flare.
5. Working Pressure Rating: 500 psig.
6. Maximum Operating Temperature: 275 deg F.

K. Moisture/Liquid Indicators:

1. Body: Forged brass.
2. Window: Replaceable, clear, fused glass window with indicating element protected by filter screen.
3. Indicator: Color coded to show moisture content in parts per million (ppm).
4. Minimum Moisture Indicator Sensitivity: Indicate moisture above 60 ppm.
5. End Connections: Socket or flare.
6. Working Pressure Rating: 500 psig.
7. Maximum Operating Temperature: 240 deg F.

L. Replaceable-Core Filter Dryers: Comply with AHRI 730.

1. Body and Cover: Painted-steel shell with ductile-iron cover, stainless-steel screws, and neoprene gaskets.
2. Filter Media: 10 micron, pleated with integral end rings; stainless-steel support.
3. Desiccant Media: Activated alumina or charcoal.
4. Designed for reverse flow (for heat-pump applications).
5. End Connections: Socket.
6. Access Ports: NPS 1/4 connections at entering and leaving sides for pressure differential measurement.
7. Maximum Pressure Loss: 2 psig.

8. Working Pressure Rating: 500 psig.
9. Maximum Operating Temperature: 240 deg F.

M. Permanent Filter Dryers: Comply with AHRI 730.

1. Body and Cover: Painted-steel shell.
2. Filter Media: 10 micron, pleated with integral end rings; stainless-steel support.
3. Desiccant Media: Activated alumina or charcoal.
4. Designed for reverse flow (for heat-pump applications).
5. End Connections: Socket.
6. Access Ports: NPS 1/4 connections at entering and leaving sides for pressure differential measurement.
7. Maximum Pressure Loss: 2 psig.
8. Working Pressure Rating: 500 psig.
9. Maximum Operating Temperature: 240 deg F.

N. Mufflers:
1. Body: Welded steel with corrosion-resistant coating.
2. End Connections: Socket or flare.
3. Working Pressure Rating: 500 psig.
4. Maximum Operating Temperature: 275 deg F.

O. Receivers: Comply with AHRI 495.

1. Comply with 2010 ASME Boiler and Pressure Vessel Code; listed and labeled by an NRTL.
2. Comply with UL 207; listed and labeled by an NRTL.
3. Body: Welded steel with corrosion-resistant coating.
4. Tappings: Inlet, outlet, liquid level indicator, and safety relief valve.
5. End Connections: Socket or threaded.
6. Working Pressure Rating: 500 psig
7. Maximum Operating Temperature: 275 deg F

P. Liquid Accumulators: Comply with AHRI 495.
1. Body: Welded steel with corrosion-resistant coating.
2. End Connections: Socket or threaded.
3. Working Pressure Rating: 500 psig
4. Maximum Operating Temperature: 275 deg F

2.4 REFRIGERANTS

A. ASHRAE 34, R-410A: Pentafluoroethane/Difluoromethane.

CASEY COMMUNITY CENTER
INTERIOR RENOVATION PROJECT

PART 3 - EXECUTION

3.1 PIPING APPLICATIONS FOR REFRIGERANT R-410A

A. Suction Lines NPS 1-1/2 (DN 40) and Smaller for Conventional Air-Conditioning Applications: Copper, Type ACR, annealed-temper tubing and wrought-copper fittings with brazed or soldered joints.

B. Hot-Gas and Liquid Lines, and Suction Lines for Heat-Pump Applications: Copper, Type ACR, annealed- or drawn-temper tubing and wrought-copper fittings with brazed or soldered joints.

C. Hot-Gas and Liquid Lines, and Suction Lines for Heat-Pump Applications:

1. Copper, Type ACR or Type L(B) annealed- or drawn-temper tubing and wrought-copper fittings with brazed or soldered joints.

D. Safety-Relief-Valve Discharge Piping: Copper, Type ACR or Type L (B), annealed- or drawn-temper tubing and wrought-copper fittings with brazed or soldered joints.

E. Safety-Relief-Valve Discharge Piping:

1. NPS 5/8 and Smaller: Copper, Type ACR or Type L (B), annealed- or drawn-temper tubing and wrought-copper fittings with brazed or soldered joints.

3.2 VALVE AND SPECIALTY APPLICATIONS

A. Install diaphragm packless or packed angle valves in suction and discharge lines of compressor.

B. Install service valves for gage taps at inlet and outlet of hot-gas bypass valves and strainers if they are not an integral part of valves and strainers.

C. Install a check valve at the compressor discharge and a liquid accumulator at the compressor suction connection.

D. Except as otherwise indicated, install diaphragm packless or packed-angle valves on inlet and outlet side of filter dryers.

E. Install a full-size, three-valve bypass around filter dryers.

F. Install solenoid valves upstream from each expansion valve and hot-gas bypass valve. Install solenoid valves in horizontal lines with coil at top.

G. Install thermostatic expansion valves as close as possible to distributors on evaporators.

1. Install valve so diaphragm case is warmer than bulb.
2. Secure bulb to clean, straight, horizontal section of suction line using two bulb straps. Do not mount bulb in a trap or at bottom of the line.
3. If external equalizer lines are required, make connection where it will reflect suction-line pressure at bulb location.

H. Install safety relief valves where required by 2010 ASME Boiler and Pressure Vessel Code. Pipe safety-relief-valve discharge line to outside according to ASHRAE 15.

I. Install moisture/liquid indicators in liquid line at the inlet of the thermostatic expansion valve or at the inlet of the evaporator coil capillary tube.

J. Install strainers upstream from and adjacent to the following unless they are furnished as an integral assembly for the device being protected:

1. Solenoid valves.
2. Thermostatic expansion valves.
3. Hot-gas bypass valves.
4. Compressor.

K. Install filter dryers in liquid line between compressor and thermostatic expansion valve**,** and in the suction line at the compressor.

L. Install receivers sized to accommodate pump-down charge.

M. Install flexible connectors at compressors.

3.3 PIPING INSTALLATION

A. Drawing plans, schematics, and diagrams indicate general location and arrangement of piping systems; indicated locations and arrangements were used to size pipe and calculate friction loss, expansion, pump sizing, and other design considerations. Install piping as indicated unless deviations to layout are approved on Shop Drawings.

B. Install refrigerant piping according to ASHRAE 15.

C. Install piping in concealed locations unless otherwise indicated and except in equipment rooms and service areas.

D. Install piping indicated to be exposed and piping in equipment rooms and service areas at right angles or parallel to building walls. Diagonal runs are prohibited unless specifically indicated otherwise.

E. Install piping above accessible ceilings to allow sufficient space for ceiling panel removal.

F. Install piping adjacent to machines to allow service and maintenance.

G. Install piping free of sags and bends.

H. Install fittings for changes in direction and branch connections.

I. Select system components with pressure rating equal to or greater than system operating pressure.

J. Refer to Section 230923 "Direct Digital Control (DDC) System for HVAC" for solenoid valve controllers, control wiring, and sequence of operation.

K. Install piping as short and direct as possible, with a minimum number of joints, elbows, and fittings.

L. Arrange piping to allow inspection and service of refrigeration equipment. Install valves and specialties in accessible locations to allow for service and inspection. Install access doors or panels as specified in Section 083113 "Access Doors and Frames" if valves or equipment requiring maintenance is concealed behind finished surfaces.

M. Install refrigerant piping in protective conduit where installed belowground.

N. Install refrigerant piping in rigid or flexible conduit in locations where exposed to mechanical injury.

O. Slope refrigerant piping as follows:

1. Install horizontal hot-gas discharge piping with a uniform slope downward away from compressor.
2. Install horizontal suction lines with a uniform slope downward to compressor.
3. Install traps and double risers to entrain oil in vertical runs.
4. Liquid lines may be installed level.

P. When brazing or soldering, remove solenoid-valve coils and sight glasses; also remove valve stems, seats, and packing, and accessible internal parts of refrigerant specialties. Do not apply heat near expansion-valve bulb.

Q. Before installation of steel refrigerant piping, clean pipe and fittings using the following procedures:

1. Shot blast the interior of piping.
2. Remove coarse particles of dirt and dust by drawing a clean, lintless cloth through tubing by means of a wire or electrician's tape.
3. Draw a clean, lintless cloth saturated with trichloroethylene through the tube or pipe. Continue this procedure until cloth is not discolored by dirt.
4. Draw a clean, lintless cloth, saturated with compressor oil, squeezed dry, through the tube or pipe to remove remaining lint. Inspect tube or pipe visually for remaining dirt and lint.
5. Finally, draw a clean, dry, lintless cloth through the tube or pipe.
6. Safety-relief-valve discharge piping is not required to be cleaned but is required to be open to allow unrestricted flow.

R. Install piping with adequate clearance between pipe and adjacent walls and hangers or between pipes for insulation installation.

S. Identify refrigerant piping and valves according to Section 230553 "Identification for HVAC Piping and Equipment."

T. Install sleeves for piping penetrations of walls, ceilings, and floors.

U. Install sleeve seals for piping penetrations of concrete walls and slabs.

V. Install escutcheons for piping penetrations of walls, ceilings, and floors.

3.4 PIPE JOINT CONSTRUCTION

A. Ream ends of pipes and tubes and remove burrs. Bevel plain ends of steel pipe.

B. Remove scale, slag, dirt, and debris from inside and outside of pipe and fittings before assembly.

C. Fill pipe and fittings with an inert gas (nitrogen or carbon dioxide), during brazing or welding, to prevent scale formation.

D. Soldered Joints: Construct joints according to ASTM B 828 or CDA's "Copper Tube Handbook."

E. Brazed Joints: Construct joints according to AWS's "Brazing Handbook," Chapter "Pipe and Tube."

1. Use Type BCuP (copper-phosphorus) alloy for joining copper socket fittings with copper pipe.
2. Use Type BAg (cadmium-free silver) alloy for joining copper with bronze or steel.

F. Threaded Joints: Thread steel pipe with tapered pipe threads according to ASME B1.20.1. Cut threads full and clean using sharp dies. Ream threaded pipe ends to remove burrs and to restore full ID. Join pipe fittings and valves as follows:

1. Apply appropriate tape or thread compound to external pipe threads unless dry-seal threading is specified.
2. Damaged Threads: Do not use pipe or pipe fittings with threads that are corroded or damaged. Do not use pipe sections that have cracked or open welds.

G. Steel pipe can be threaded, but threaded joints must be seal brazed or seal welded.

H. Welded Joints: Construct joints according to AWS D10.12M/D10.12.

I. Flanged Joints: Select appropriate gasket material, size, type, and thickness for service application. Install gasket concentrically positioned. Use suitable lubricants on bolt threads.

3.5 HANGERS AND SUPPORTS

A. Comply with requirements for pipe hangers and supports specified in Section 230529 "Hangers and Supports for HVAC Piping and Equipment."

B. Install the following pipe attachments:

1. Adjustable steel clevis hangers for individual horizontal runs less than 20 feet (6 m) long.
2. Roller hangers and spring hangers for individual horizontal runs 20 feet (6 m) or longer.
3. Pipe Roller: MSS SP-58, Type 44 for multiple horizontal piping 20 feet (6 m) or longer, supported on a trapeze.
4. Spring hangers to support vertical runs.
5. Copper-clad hangers and supports for hangers and supports in direct contact with copper pipe.

C. Install hangers for copper tubing with the following maximum spacing and minimum rod diameters:

1. NPS 1/2: Maximum span, 60 inches; minimum rod, 1/4 inch.
2. NPS 5/8: Maximum span, 60 inches; minimum rod, 1/4 inch.

D. Support multifloor vertical runs at least at each floor.

3.6 FIELD QUALITY CONTROL

A. Perform the following tests and inspections:

1. Comply with ASME B31.5, Chapter VI.
2. Test refrigerant piping, specialties, and receivers. Isolate compressor, condenser, evaporator, and safety devices from test pressure if they are not rated above the test pressure.
3. Test high- and low-pressure side piping of each system separately at not less than the pressures indicated in "Performance Requirements" Article.

   a. Fill system with nitrogen to the required test pressure.
   b. System shall maintain test pressure at the manifold gage throughout duration of test.
   c. Test joints and fittings with electronic leak detector or by brushing a small amount of soap and glycerin solution over joints.
   d. Remake leaking joints using new materials, and retest until satisfactory results are achieved.

B. Prepare test and inspection reports.

3.7 SYSTEM CHARGING

A. Charge system using the following procedures:

1. Install core in filter dryers after leak test but before evacuation.
2. Evacuate entire refrigerant system with a vacuum pump to 500 micrometers. If vacuum holds for 12 hours, system is ready for charging.
3. Break vacuum with refrigerant gas, allowing pressure to build up to 2 psig.
4. Charge system with a new filter-dryer core in charging line.

3.8 ADJUSTING

A. Adjust thermostatic expansion valve to obtain proper evaporator superheat.

B. Adjust high- and low-pressure switch settings to avoid short cycling in response to fluctuating suction pressure.

C. Adjust set-point temperature of air-conditioning or chilled-water controllers to the system design temperature.

D. Perform the following adjustments before operating the refrigeration system, according to manufacturer's written instructions:

1. Open shutoff valves in condenser water circuit.
2. Verify that compressor oil level is correct.
3. Open compressor suction and discharge valves.
4. Open refrigerant valves except bypass valves that are used for other purposes.
5. Check open compressor-motor alignment and verify lubrication for motors and bearings.

E. Replace core of replaceable filter dryer after system has been adjusted and after design flow rates and pressures are established.

END OF SECTION 232300

SECTION 233113 - METAL DUCTS

PART 1 - GENERAL

1.1 RELATED DOCUMENTS

A. Drawings and general provisions of the Contract, including General and Supplementary Conditions and Division 01 Specification Sections, apply to this Section.

1.2 SUMMARY

A. Section Includes:

1. Single-wall rectangular ducts and fittings.
2. Single-wall round ducts and fittings.
3. Sheet metal materials.
4. Sealants and gaskets.
5. Hangers and supports.

B. Related Sections:

1. Section 230593 "Testing, Adjusting, and Balancing for HVAC" for testing, adjusting, and balancing requirements for metal ducts.
2. Section 233300 "Air Duct Accessories" for dampers, sound-control devices, duct-mounting access doors and panels, turning vanes, and flexible ducts.

1.3 PERFORMANCE REQUIREMENTS

A. Delegated Duct Design: Duct construction, including sheet metal thicknesses, seam and joint construction, reinforcements, and hangers and supports, shall comply with SMACNA's "HVAC Duct Construction Standards - Metal and Flexible" and performance requirements and design criteria indicated in "Duct Schedule" Article.

B. Structural Performance: Duct hangers and supports shall withstand the effects of gravity loads and stresses within limits and under conditions described in SMACNA's "HVAC Duct Construction Standards - Metal and Flexible", ASCE/SEI 7.

C. Airstream Surfaces: Surfaces in contact with the airstream shall comply with requirements in ASHRAE 62.1.

1.4 ACTION SUBMITTALS

A. Product Data: For each type of the following products:

1. Liners and adhesives.
2. Sealants and gaskets.

B. Shop Drawings:

1. Fabrication, assembly, and installation, including plans, elevations, sections, components, and attachments to other work.
2. Factory- and shop-fabricated ducts and fittings.
3. Duct layout indicating sizes, configuration, liner material, and static-pressure classes.
4. Elevation of top of ducts.
5. Dimensions of main duct runs from building grid lines.
6. Fittings.
7. Reinforcement and spacing.
8. Seam and joint construction.
9. Penetrations through fire-rated and other partitions.
10. Equipment installation based on equipment being used on Project.
11. Locations for duct accessories, including dampers, turning vanes, and access doors and panels.
12. Hangers and supports, including methods for duct and building attachment and vibration isolation.

C. Delegated-Design Submittal:

1. Sheet metal thicknesses.
2. Joint and seam construction and sealing.
3. Reinforcement details and spacing.
4. Materials, fabrication, assembly, and spacing of hangers and supports.
5. Design Calculations: Calculations, for selecting hangers and supports.

1.5 INFORMATIONAL SUBMITTALS

A. Coordination Drawings: Plans, drawn to scale, on which the following items are shown and coordinated with each other, using input from installers of the items involved:

1. Duct installation in congested spaces, indicating coordination with general construction, building components, and other building services. Indicate proposed changes to duct layout.
2. Suspended ceiling components.
3. Structural members to which duct will be attached.
4. Size and location of initial access modules for acoustical tile.
5. Penetrations of smoke barriers and fire-rated construction.
6. Items penetrating finished ceiling including the following:

   a. Lighting fixtures.
   b. Air outlets and inlets.
   c. Sprinklers.
   d. Access panels.
   e. Perimeter moldings.

B. Welding certificates.

C. Field quality-control reports.

1.6 QUALITY ASSURANCE

A. Welding Qualifications: Quality procedures and personnel according to AWS D1.1/D1.1M, “Structural Welding Code – Steel,” for hangers and supports, AWS D1.2/D1.2M, “Structural Welding Code – Aluminum,” for aluminum supports, and AWS D9.1/D9.1M, “Sheet Metal Welding Code,” for duct joint and seam welding.

B. Welding Qualifications: Qualify procedures and personnel according the following.

1. AWS D1.1/D1.1M, “Structural Welding Code – Steel,” for hangers and supports.
2. AWS D1.2/D1.2M, “Structural Welding Code – Aluminum,” for aluminum supports.
3. AWS D9.1/D9.1M, “Sheet Metal Welding Code,” for duct joint and seam welding

C. ASHRAE Compliance: Applicable requirements in ASHRAE 62.1, Section 5 - "Systems and Equipment" and Section 7 - "Construction and System Start-up."

D. ASHRAE/IESNA Compliance: Applicable requirements in ASHRAE/IESNA 90.1, Section 6.4.4 - "HVAC System Construction and Insulation."

PART 2 - PRODUCTS

2.1 SINGLE-WALL RECTANGULAR DUCTS AND FITTINGS

A. General Fabrication Requirements: Comply with SMACNA's "HVAC Duct Construction Standards - Metal and Flexible" based on indicated static-pressure class unless otherwise indicated.

B. Transverse Joints: Select joint types and fabricate according to SMACNA's "HVAC Duct Construction Standards - Metal and Flexible," Figure 2-1, "Rectangular Duct/Transverse Joints," for static-pressure class, applicable sealing requirements, materials involved, duct-support intervals, and other provisions in SMACNA's "HVAC Duct Construction Standards - Metal and Flexible."

C. Longitudinal Seams: Select seam types and fabricate according to SMACNA's "HVAC Duct Construction Standards - Metal and Flexible," Figure 2-2, "Rectangular Duct/Longitudinal Seams," for static-pressure class, applicable sealing requirements, materials involved, duct-support intervals, and other provisions in SMACNA's "HVAC Duct Construction Standards - Metal and Flexible."

D. Elbows, Transitions, Offsets, Branch Connections, and Other Duct Construction: Select types and fabricate according to SMACNA's "HVAC Duct Construction Standards - Metal and Flexible," Chapter 4, "Fittings and Other Construction," for static-pressure class, applicable sealing requirements, materials involved, duct-support intervals, and other provisions in SMACNA's "HVAC Duct Construction Standards - Metal and Flexible."

2.2 SINGLE-WALL ROUND DUCTS AND FITTINGS

A. General Fabrication Requirements: Comply with SMACNA's "HVAC Duct Construction Standards - Metal and Flexible" Chapter 3, “Round, Oval and Flexible Duct,” based on indicated static-pressure class unless otherwise indicated.

B. Traverse Joints: Select joint types and fabricate according to SMACNA’s “HVAC Duct Construction Standards – Metal and Flexible,” Figure 3-1, “ Round Duct Transverse Joints,” for static-pressure class, applicable sealing requirements, materials involved, duct support intervals, and other provisions in SMACNA’s “HVAC Duct Construction Standards – Metal and Flexible.”

1. Traverse Joints in Ducts Larger Than 50 Inches in Diameter: Flanged

C. Longitudinal Seams: Select seam types and fabricate according to SMACNA’s “HVAC Duct Construction Standards – Metal and Flexible,” Figure 3-2, “ Round Duct Longitudinal Seams,” for static-pressure class, applicable sealing requirements, materials involved, duct support intervals, and other provisions in SMACNA’s “HVAC Duct Construction Standards – Metal and Flexible.”

1. Fabricate round duct larger than 90 inches in diameter with butt-welded longitudinal seams.

D. Tees and Laterals: Select types and fabricate according to SMACNA’s “HVAC Duct Construction Standards – Metal and Flexible,” Figure 3-5, “ 90 Degree Tees and Laterals,” and Figure 3-6, “Conical Tees,” for static-pressure class, applicable sealing requirements, materials involved, duct support intervals, and other provisions in SMACNA’s “HVAC Duct Construction Standards – Metal and Flexible.”

2.3 SHEET METAL MATERIALS

A. General Material Requirements: Comply with SMACNA's "HVAC Duct Construction Standards - Metal and Flexible" for acceptable materials, material thicknesses, and duct construction methods unless otherwise indicated. Sheet metal materials shall be free of pitting, seam marks, roller marks, stains, discolorations, and other imperfections.

B. Galvanized Sheet Steel: Comply with ASTM A 653/A 653M.

1. Galvanized Coating Designation: G60 or G90 (Z275).
2. Finishes for Surfaces Exposed to View: Mill phosphatized.

C. PVC-Coated, Galvanized Sheet Steel: Comply with ASTM A 653/A 653M.

1. Galvanized Coating Designation: G60 or G90 (Z275).
2. Minimum Thickness for Factory-Applied PVC Coating: 4 mils thick on sheet metal surface of ducts and fittings exposed to corrosive conditions, and minimum 1 mil thick on opposite surface.
3. Coating Materials: Acceptable to authorities having jurisdiction for use on ducts listed and labeled by an NRTL for compliance with UL 181, Class 1.

D. Carbon-Steel Sheets: Comply with ASTM A 1008/A 1008M, with oiled, matte finish for exposed ducts.

E. Stainless-Steel Sheets: Comply with ASTM A 480/A 480M, Type 304 or 316, as indicated in the "Duct Schedule" Article; cold rolled, annealed, sheet. Exposed surface finish shall be No. 2B, No. 2D, No. 3, or No. 4 as indicated in the "Duct Schedule" Article.

F. Aluminum Sheets: Comply with ASTM B 209 Alloy 3003, H14 temper; with mill finish for concealed ducts, and standard, one-side bright finish for duct surfaces exposed to view.

G. Factory- or Shop-Applied Antimicrobial Coating:

1. Apply to the surface of sheet metal that will form the interior surface of the duct. An untreated clear coating shall be applied to the exterior surface.
2. Antimicrobial compound shall be tested for efficacy by an NRTL and registered by the EPA for use in HVAC systems.
3. Coating containing the antimicrobial compound shall have a hardness of 2H, minimum, when tested according to ASTM D 3363.
4. Surface-Burning Characteristics: Maximum flame-spread index of 25 and maximum smoke-developed index of 50 when tested according to UL 723; certified by an NRTL.
5. Shop-Applied Coating Color: as approved by Architect.
6. Antimicrobial coating on sheet metal is not required for duct containing liner treated with antimicrobial coating.

H. Reinforcement Shapes and Plates: ASTM A 36/A 36M, steel plates, shapes, and bars; black and galvanized.

1. Where black- and galvanized-steel shapes and plates are used to reinforce aluminum ducts, isolate the different metals with butyl rubber, neoprene, or EPDM gasket materials.

I. Tie Rods: Galvanized steel, 1/4-inch (6-mm) minimum diameter for lengths 36 inches (900 or less; 3/8-inch minimum diameter for lengths longer than 36 inches.

2.4 SEALANT AND GASKETS

A. General Sealant and Gasket Requirements: Surface-burning characteristics for sealants and gaskets shall be a maximum flame-spread index of 25 and a maximum smoke-developed index of 50 when tested according to UL 723; certified by an NRTL.

B. Two-Part Tape Sealing System:

1. Tape: Woven cotton fiber impregnated with mineral gypsum and modified acrylic/silicone activator to react exothermically with tape to form hard, durable, airtight seal.
2. Tape Width: 4 inches.
3. Sealant: Modified styrene acrylic.
4. Water resistant.
5. Mold and mildew resistant.
6. Maximum Static-Pressure Class: 10-inch wg, positive and negative.
7. Service: Indoor and outdoor.

8. Service Temperature: Minus 40 to plus 200 deg F.
9. Substrate: Compatible with galvanized sheet steel (both PVC coated and bare), stainless steel, or aluminum.
10. For indoor applications, sealant shall have a VOC content of 250 g/L or less when calculated according to 40 CFR 59, Subpart D (EPA Method 24).
11. Sealant shall comply with the testing and product requirements of the California Department of Health Services' "Standard Practice for the Testing of Volatile Organic Emissions from Various Sources Using Small-Scale Environmental Chambers."

C. Water-Based Joint and Seam Sealant:

1. Application Method: Brush on.
2. Solids Content: Minimum 65 percent.
3. Shore A Hardness: Minimum 20.
4. Water resistant.
5. Mold and mildew resistant.
6. VOC: Maximum 75 g/L (less water).
7. Maximum Static-Pressure Class: 10-inch wg (2500 Pa), positive and negative.
8. Service: Indoor or outdoor.
9. Substrate: Compatible with galvanized sheet steel (both PVC coated and bare), stainless steel, or aluminum sheets.

D. Solvent-Based Joint and Seam Sealant:

1. Application Method: Brush on.
2. Base: Synthetic rubber resin.
3. Solvent: Toluene and heptane.
4. Solids Content: Minimum 60 percent.
5. Shore A Hardness: Minimum 60.
6. Water resistant.
7. Mold and mildew resistant.
8. For indoor applications, sealant shall have a VOC content of 250 g/L or less when calculated according to 40 CFR 59, Subpart D (EPA Method 24).
9. VOC: Maximum 395 g/L.
10. Sealant shall comply with the testing and product requirements of the California Department of Health Services' "Standard Practice for the Testing of Volatile Organic Emissions from Various Sources Using Small-Scale Environmental Chambers."
11. Maximum Static-Pressure Class: 10-inch wg positive or negative.
12. Service: Indoor or outdoor.
13. Substrate: Compatible with galvanized sheet steel (both PVC coated and bare), stainless steel, or aluminum sheets.

E. Flanged Joint Sealant: Comply with ASTM C 920.

1. General: Single-component, acid-curing, silicone, elastomeric.
2. Type: S.
3. Grade: NS.
4. Class: 25.
5. Use: O.
6. For indoor applications, sealant shall have a VOC content of 250 g/L or less when calculated according to 40 CFR 59, Subpart D (EPA Method 24).

7. Sealant shall comply with the testing and product requirements of the California Department of Health Services' "Standard Practice for the Testing of Volatile Organic Emissions from Various Sources Using Small-Scale Environmental Chambers."

F. Flange Gaskets: Butyl rubber, neoprene, or EPDM polymer with polyisobutylene plasticizer.

G. Round Duct Joint O-Ring Seals:

1. Seal shall provide maximum leakage class of3 cfm/100 sq. ft. at 1-inch wg and shall be rated for10-inch wg static-pressure class, positive or negative.
2. EPDM O-ring to seal in concave bead in coupling or fitting spigot.
3. Double-lipped, EPDM O-ring seal, mechanically fastened to factory-fabricated couplings and fitting spigots.

2.5 HANGERS AND SUPPORTS

A. Hanger Rods for Noncorrosive Environments: Cadmium-plated steel rods and nuts.

B. Hanger Rods for Corrosive Environments: Electrogalvanized, all-thread rods or galvanized rods with threads painted with zinc-chromate primer after installation.

C. Strap and Rod Sizes: Comply with SMACNA's "HVAC Duct Construction Standards - Metal and Flexible," Table 5-1, "Rectangular Duct Hangers Minimum Size," and Table 5-2, "Minimum Hanger Sizes for Round Duct."

D. Steel Cables for Galvanized-Steel Ducts: Galvanized steel complying with ASTM A 603.

E. Steel Cables for Stainless-Steel Ducts: Stainless steel complying with ASTM A 492.

F. Steel Cable End Connections: Cadmium-plated steel assemblies with brackets, swivel, and bolts designed for duct hanger service; with an automatic-locking and clamping device.

G. Duct Attachments: Sheet metal screws, blind rivets, or self-tapping metal screws; compatible with duct materials.

H. Trapeze and Riser Supports:

1. Supports for Galvanized-Steel Ducts: Galvanized-steel shapes and plates.
2. Supports for Stainless-Steel Ducts: Stainless-steel shapes and plates.
3. Supports for Aluminum Ducts: Aluminum or galvanized steel coated with zinc chromate.

PART 3 - EXECUTION

3.1 DUCT INSTALLATION

A. Drawing plans, schematics, and diagrams indicate general location and arrangement of duct system. Indicated duct locations, configurations, and arrangements were used to size ducts and calculate friction loss for air-handling equipment sizing and for other design considerations.

Install duct systems as indicated unless deviations to layout are approved on Shop Drawings and Coordination Drawings.

B. Install ducts according to SMACNA's "HVAC Duct Construction Standards - Metal and Flexible" unless otherwise indicated.

C. Install round ducts in maximum practical lengths.

D. Install ducts with fewest possible joints.

E. Install factory- or shop-fabricated fittings for changes in direction, size, and for branch connections.

F. Unless otherwise indicated, install ducts vertically and horizontally, and parallel and perpendicular to building lines.

G. Install ducts close to walls, overhead construction, columns, and other structural and permanent enclosure elements of building.

H. Install ducts with a clearance of 1 inch, plus allowance for insulation thickness.

I. Route ducts to avoid passing through transformer vaults and electrical equipment rooms and enclosures.

J. Where ducts pass through non-fire-rated interior partitions and exterior walls and are exposed to view, cover the opening between the partition and duct or duct insulation with sheet metal flanges of same metal thickness as the duct. Overlap openings on four sides by at least 1-1/2 inches.

K. Where ducts pass through fire-rated interior partitions and exterior walls, install fire dampers. Comply with requirements in Section 233300 "Air Duct Accessories" for fire and smoke dampers.

L. Protect duct interiors from moisture, construction debris and dust, and other foreign materials. Comply with SMACNA's "IAQ Guidelines for Occupied Buildings Under Construction," Appendix G, "Duct Cleanliness for New Construction Guidelines."

3.2 INSTALLATION OF EXPOSED DUCTWORK

A. Protect duct exposed in finished spaces from being dented, scratched or damaged.

B. Trim duct sealants flush with metal. Create a smooth and uniform exposed bead. Do not use two-part tape sealing system..

C. Grind welds to provide smooth surface free of burrs, sharp edges, and weld splatter. When welding stainless steel with a No.3 or 4 finish, grind the welds flush, polish the exposed welds, and treat the welds to remove the discoloration caused by the welding.

D. Maintain consistency, symmetry, and uniformity in the arrangement and fabrication of fittings, hangers and supports, duct accessories, and air outlets.

E. Repair and replace damaged sections and finished work that does not comply with these requirements.

3.3 DUCT SEALING

A. Seal ducts for duct static-pressure, seal classes, and leakage classes specified in "Duct Schedule" Article according to SMACNA's "HVAC Duct Construction Standards - Metal and Flexible."

B. Seal ducts to the following seal classes according to SMACNA's "HVAC Duct Construction Standards - Metal and Flexible":

1. Comply with SMACNA's "HVAC Duct Construction Standards - Metal and Flexible."
2. Outdoor, Supply-Air Ducts: Seal Class A.
3. Outdoor, Exhaust Ducts: Seal Class C.
4. Outdoor, Return-Air Ducts: Seal Class C.
5. Unconditioned Space, Supply-Air Ducts in Pressure Classes 2-Inch wg and Lower: Seal Class B.
6. Unconditioned Space, Supply-Air Ducts in Pressure Classes Higher Than 2-Inch: Seal Class A.
7. Unconditioned Space, Exhaust Ducts: Seal Class C.
8. Unconditioned Space, Return-Air Ducts: Seal Class B.
9. Conditioned Space, Supply-Air Ducts in Pressure Classes 2-Inch wg and Lower: Seal Class C.
10. Conditioned Space, Supply-Air Ducts in Pressure Classes Higher Than 2-Inch wg: Seal Class B.
11. Conditioned Space, Exhaust Ducts: Seal Class B.
12. Conditioned Space, Return-Air Ducts: Seal Class C.

3.4 HANGER AND SUPPORT INSTALLATION

A. Comply with SMACNA's "HVAC Duct Construction Standards - Metal and Flexible," Chapter 5, "Hangers and Supports."

B. Building Attachments: Concrete inserts, powder-actuated fasteners, or structural-steel fasteners appropriate for construction materials to which hangers are being attached.

1. Where practical, install concrete inserts before placing concrete.
2. Install powder-actuated concrete fasteners after concrete is placed and completely cured.
3. Use powder-actuated concrete fasteners for standard-weight aggregate concretes or for slabs more than 4 inches thick.
4. Do not use powder-actuated concrete fasteners for lightweight-aggregate concretes or for slabs less than 4 inches thick.
5. Do not use powder-actuated concrete fasteners for seismic restraints.

C. Hanger Spacing: Comply with SMACNA's "HVAC Duct Construction Standards - Metal and Flexible," Table 5-1, "Rectangular Duct Hangers Minimum Size," and Table 5-2, "Minimum Hanger Sizes for Round Duct," for maximum hanger spacing; install hangers and supports within 24 inches of each elbow and within 48 inches of each branch intersection.

D. Hangers Exposed to View: Threaded rod and angle or channel supports.

E. Support vertical ducts with steel angles or channel secured to the sides of the duct with welds, bolts, sheet metal screws, or blind rivets; support at each floor and at a maximum intervals of 16 feet.

F. Install upper attachments to structures. Select and size upper attachments with pull-out, tension, and shear capacities appropriate for supported loads and building materials where used.

3.5 CONNECTIONS

A. Make connections to equipment with flexible connectors complying with Section 233300 "Air Duct Accessories."

B. Comply with SMACNA's "HVAC Duct Construction Standards - Metal and Flexible" for branch, outlet and inlet, and terminal unit connections.

3.6 PAINTING

A. Paint interior of metal ducts that are visible through registers and grilles and that do not have duct liner. Apply one coat of flat, black, latex paint over a compatible galvanized-steel primer. Paint materials and application requirements are specified in Section 099113 "Exterior Painting" and Section 099123 "Interior Painting."

3.7 FIELD QUALITY CONTROL

A. Perform tests and inspections.

B. Leakage Tests:

1. Comply with SMACNA's "HVAC Air Duct Leakage Test Manual." Submit a test report for each test.
2. Test the following systems:
   a. Supply Ducts with a Pressure Class of 2 inch wg or Higher: Test representative duct sections, selected by Architect from sections installed, totaling no less than 50, 100 percent of total installed duct area for each designated pressure class.
   b. Return Ducts with a Pressure Class of 2 inch wg or Higher: Test representative duct sections, selected by Architect from sections installed, totaling no less than 50, 100 percent of total installed duct area for each designated pressure class.
   c. Exhaust Ducts with a Pressure Class of 2 inch wg or Higher: Test representative duct sections, selected by Architect from sections installed, totaling no less than 50, 100percent of total installed duct area for each designated pressure class.
   d. Outdoor Air Ducts with a Pressure Class of 1 inch wg or Higher: Test representative duct sections, selected by Architect from sections installed, totaling no less than 50, 100 <Insert value> percent of total installed duct area for each designated pressure class.

3. Disassemble, reassemble, and seal segments of systems to accommodate leakage testing and for compliance with test requirements.
4. Test for leaks before applying external insulation.
5. Conduct tests at static pressures equal to maximum design pressure of system or section being tested. If static-pressure classes are not indicated, test system at maximum system design pressure. Do not pressurize systems above maximum design operating pressure.
6. Give seven days' advance notice for testing.

C. Duct System Cleanliness Tests:

1. Visually inspect duct system to ensure that no visible contaminants are present.
2. Test sections of metal duct system, chosen randomly by Owner, for cleanliness according to "Vacuum Test" in NADCA ACR, "Assessment, Cleaning and Restoration of HVAC Systems."

a. Acceptable Cleanliness Level: Net weight of debris collected on the filter media shall not exceed 0.75 mg/100 sq. cm.

D. Duct system will be considered defective if it does not pass tests and inspections.

E. Prepare test and inspection reports.

3.8 DUCT CLEANING

A. Clean new and existing duct system(s) before testing, adjusting, and balancing.

B. Use service openings for entry and inspection.

1. Create new openings and install access panels appropriate for duct static-pressure class if required for cleaning access. Provide insulated panels for insulated or lined duct. Patch insulation and liner as recommended by duct liner manufacturer. Comply with Section 233300 "Air Duct Accessories" for access panels and doors.
2. Disconnect and reconnect flexible ducts as needed for cleaning and inspection.
3. Remove and reinstall ceiling to gain access during the cleaning process.

C. Particulate Collection and Odor Control:

1. When venting vacuuming system inside the building, use HEPA filtration with 99.97 percent collection efficiency for 0.3-micron-size (or larger) particles.
2. When venting vacuuming system to outdoors, use filter to collect debris removed from HVAC system, and locate exhaust downwind and away from air intakes and other points of entry into building.

D. Clean the following components by removing surface contaminants and deposits:

1. Air outlets and inlets (registers, grilles, and diffusers).
2. Supply, return, and exhaust fans including fan housings, plenums (except ceiling supply and return plenums), scrolls, blades or vanes, shafts, baffles, dampers, and drive assemblies.

3. Air-handling unit internal surfaces and components including mixing box, coil section, air wash systems, spray eliminators, condensate drain pans, humidifiers and dehumidifiers, filters and filter sections, and condensate collectors and drains.
4. Coils and related components.
5. Return-air ducts, dampers, actuators, and turning vanes except in ceiling plenums and mechanical equipment rooms.
6. Supply-air ducts, dampers, actuators, and turning vanes.
7. Dedicated exhaust and ventilation components and makeup air systems.

E. Mechanical Cleaning Methodology:

1. Clean metal duct systems using mechanical cleaning methods that extract contaminants from within duct systems and remove contaminants from building.
2. Use vacuum-collection devices that are operated continuously during cleaning. Connect vacuum device to downstream end of duct sections so areas being cleaned are under negative pressure.
3. Use mechanical agitation to dislodge debris adhered to interior duct surfaces without damaging integrity of metal ducts, duct liner, or duct accessories.
4. Clean fibrous-glass duct liner with HEPA vacuuming equipment; do not permit duct liner to get wet. Replace fibrous-glass duct liner that is damaged, deteriorated, or delaminated or that has friable material, mold, or fungus growth.
5. Clean coils and coil drain pans according to NADCA 1992. Keep drain pan operational. Rinse coils with clean water to remove latent residues and cleaning materials; comb and straighten fins.
6. Provide drainage and cleanup for wash-down procedures.
7. Antimicrobial Agents and Coatings: Apply EPA-registered antimicrobial agents if fungus is present. Apply antimicrobial agents according to manufacturer's written instructions after removal of surface deposits and debris.

3.9 START UP

A. Air Balance: Comply with requirements in Section 230593 "Testing, Adjusting, and Balancing for HVAC."

3.10 DUCT SCHEDULE

A. Fabricate ducts with galvanized sheet steel except as otherwise indicated and as follows:

B. Supply Ducts:

1. Ducts Connected to Fan Coil Units, Furnaces, Heat Pumps, Energy Recovery Unit and Terminal Units:

a. Pressure Class: Positive 2-inch wg
b. Minimum SMACNA Seal Class: C.
c. SMACNA Leakage Class for Rectangular: 24.
d. SMACNA Leakage Class for Round and Flat Oval: 12.

C. Return Ducts:

1. Ducts Connected to Fan Coil Units, Furnaces, Heat Pumps, Energy Recovery Unit and Terminal Units :

    a. Pressure Class: Positive or negative 2-inch wg.
    b. Minimum SMACNA Seal Class: C.
    c. SMACNA Leakage Class for Rectangular: 24.
    d. SMACNA Leakage Class for Round and Flat Oval: 12.

2. Ducts Connected to Air-Handling Units:

    a. Pressure Class: Positive or negative 2 inch wg.
    b. Minimum SMACNA Seal Class: B.
    c. SMACNA Leakage Class for Rectangular: 24.
    d. SMACNA Leakage Class for Round and Flat Oval: 12.

D. Exhaust Ducts:

1. Ducts Connected to Fans Exhausting (ASHRAE 62.1, Class 1 and 2) Air and Energy Recovery Unit :

    a. Pressure Class: Negative 2-inch wg .
    b. Minimum SMACNA Seal Class: C if negative pressure, and A if positive pressure.
    c. SMACNA Leakage Class for Rectangular: 24.
    d. SMACNA Leakage Class for Round and Flat Oval: 12.

2. Ducts Connected to Commercial Kitchen Hoods: Comply with NFPA 96.

    a. Exposed to View: Type 304, stainless-steel sheet, No. 4, No. 3<Insert finish> finish.
    b. Concealed: Type 304, stainless-steel sheet, No. 2D finish, Carbon-steel sheet.
    c. Welded seams and joints.
    d. Pressure Class: Positive or negative 2-inch wg (500 Pa), 3-inch wg (750 Pa) 4-inch wg (1000 Pa) <Insert value>.
    e. Minimum SMACNA Seal Class: Welded seams, joints, and penetrations.
    f. SMACNA Leakage Class: 3.

3. Ducts Connected to Dishwasher Hoods:

    a. Type 304, stainless-steel sheet.
    b. Exposed to View: No. 4 finish.
    c. Concealed: No. 2D finish.
    d. Welded seams and flanged joints with watertight EPDM gaskets.
    e. Pressure Class: Positive or negative 1-inch wg.
    f. Minimum SMACNA Seal Class: Welded seams, joints, and penetrations.
    g. SMACNA Leakage Class: 3.

E. Outdoor-Air (Not Filtered, Heated, or Cooled) Ducts:

1. Ducts Connected to Fan Coil Units, Furnaces, Heat Pumps, and Terminal Units:

a. Pressure Class: Positive or negative 1-inch wg
b. Minimum SMACNA Seal Class: C.
c. SMACNA Leakage Class for Rectangular: 24.
d. SMACNA Leakage Class for Round and Flat Oval: 12.

2. Ducts Connected to Air-Handling Units:

a. Pressure Class: Positive or negative 1 inch wg.
b. Minimum SMACNA Seal Class: B.
c. SMACNA Leakage Class for Rectangular: 12.
d. SMACNA Leakage Class for Round and Flat Oval: 6.

F. Intermediate Reinforcement:

1. Galvanized-Steel Ducts: Galvanized steel.

G. Elbow Configuration:

1. Rectangular Duct: Comply with SMACNA's "HVAC Duct Construction Standards - Metal and Flexible," Figure 4-2, "Rectangular Elbows."

a. Velocity 1000 fpm or Lower:

1) Radius Type RE 1 with minimum 0.5 radius-to-diameter ratio.
2) Mitered Type RE 4 without vanes.

b. Velocity 1000 to 1500 fpm:

1) Radius Type RE 1 with minimum 1.0 radius-to-diameter ratio.
2) Radius Type RE 3 with minimum 0.5 radius-to-diameter ratio and two vanes.
3) Mitered Type RE 2 with vanes complying with SMACNA's "HVAC Duct Construction Standards - Metal and Flexible," Figure 4-3, "Vanes and Vane Runners," and Figure 4-4, "Vane Support in Elbows."

c. Velocity 1500 fpm or Higher:

1) Radius Type RE 1 with minimum 1.5 radius-to-diameter ratio.
2) Radius Type RE 3 with minimum 1.0 radius-to-diameter ratio and two vanes.
3) Mitered Type RE 2 with vanes complying with SMACNA's "HVAC Duct Construction Standards - Metal and Flexible," Figure 4-3, "Vanes and Vane Runners," and Figure 4-4, "Vane Support in Elbows."

2. Rectangular Duct: Comply with SMACNA's "HVAC Duct Construction Standards - Metal and Flexible," Figure 4-2, "Rectangular Elbows."

a. Radius Type RE 1 with minimum 1.5 radius-to-diameter ratio.
b. Radius Type RE 3 with minimum 1.0 radius-to-diameter ratio and two vanes.

c. Mitered Type RE 2 with vanes complying with SMACNA's "HVAC Duct Construction Standards - Metal and Flexible," Figure 4-3, "Vanes and Vane Runners," and Figure 4-4, "Vane Support in Elbows."

3. Round Duct: Comply with SMACNA's "HVAC Duct Construction Standards - Metal and Flexible," Figure 3-4, "Round Duct Elbows."

a. Minimum Radius-to-Diameter Ratio and Elbow Segments: Comply with SMACNA's "HVAC Duct Construction Standards - Metal and Flexible," Table 3-1, "Mitered Elbows." Elbows with less than 90-degree change of direction have proportionately fewer segments.

1) Velocity 1000 fpm or Lower: 0.5 radius-to-diameter ratio and three segments for 90-degree elbow.
2) Velocity 1000 to 1500 fpm: 1.0 radius-to-diameter ratio and four segments for 90-degree elbow.
3) Velocity 1500 fpm or Higher: 1.5 radius-to-diameter ratio and five segments for 90-degree elbow.
4) Radius-to Diameter Ratio: 1.5.

b. Round Elbows, 12 Inches and Smaller in Diameter: Stamped or pleated.
c. Round Elbows, 14 Inches and Larger in Diameter: Standing seam.

H. Branch Configuration:

1. Rectangular Duct: Comply with SMACNA's "HVAC Duct Construction Standards - Metal and Flexible," Figure 4-6, "Branch Connection."

a. Rectangular Main to Rectangular Branch: 45-degree entry.
b. Rectangular Main to Round Branch: Spin in.

2. Round and Flat Oval: Comply with SMACNA's "HVAC Duct Construction Standards - Metal and Flexible," Figure 3-5, "90 Degree Tees and Laterals," and Figure 3-6, "Conical Tees." Saddle taps are permitted in existing duct.

a. Velocity 1000 fpm or Lower: 90-degree tap.
b. Velocity 1000 to 1500 fpm: Conical tap.
c. Velocity 1500 fpm or Higher: 45-degree lateral.

END OF SECTION 233113

Copyright 2013 AIA MasterSpec Premium

SECTION 233300 - AIR DUCT ACCESSORIES

PART 1 - GENERAL

1.1 RELATED DOCUMENTS

A. Drawings and general provisions of the Contract, including General and Supplementary Conditions and Division 01 Specification Sections, apply to this Section.

1.2 SUMMARY

A. Section Includes:

1. Backdraft and pressure relief dampers.
2. Manual volume dampers.
3. Control dampers.
4. Fire dampers.
5. Corridor dampers.
6. Flange connectors.
7. Turning vanes.
8. Flexible connectors.
9. Flexible ducts.

1.3 ACTION SUBMITTALS

A. Product Data: For each type of product.

1. For duct silencers, include pressure drop and dynamic insertion loss data. Include breakout noise calculations for high transmission loss casings.

B. Shop Drawings: For duct accessories. Include plans, elevations, sections, details and attachments to other work.

1. Detail duct accessories fabrication and installation in ducts and other construction. Include dimensions, weights, loads, and required clearances; and method of field assembly into duct systems and other construction. Include the following:

a. Special fittings.
b. Manual volume damper installations.
c. Control-damper installations.
d. Fire-damper, ceiling, and corridor damper installations, including sleeves.
e. Duct security bars.
f. Wiring Diagrams: For power, signal, and control wiring.

Copyright 2013 AIA MasterSpec Premium

1.4 INFORMATIONAL SUBMITTALS

A. Coordination Drawings: Reflected ceiling plans, drawn to scale, on which ceiling-mounted access panels and access doors required for access to duct accessories are shown and coordinated with each other, using input from Installers of the items involved.

B. Source quality-control reports.

1.5 CLOSEOUT SUBMITTALS

A. Operation and Maintenance Data: For air duct accessories to include in operation and maintenance manuals.

1.6 MAINTENANCE MATERIAL SUBMITTALS

A. Furnish extra materials that match products installed and that are packaged with protective covering for storage and identified with labels describing contents.

1. Fusible Links: Furnish quantity equal to 10 percent of amount installed.

PART 2 - PRODUCTS

2.1 ASSEMBLY DESCRIPTION

A. Comply with NFPA 90A, "Installation of Air Conditioning and Ventilating Systems," and with NFPA 90B, "Installation of Warm Air Heating and Air Conditioning Systems."

B. Comply with SMACNA's "HVAC Duct Construction Standards - Metal and Flexible" for acceptable materials, material thicknesses, and duct construction methods unless otherwise indicated. Sheet metal materials shall be free of pitting, seam marks, roller marks, stains, discolorations, and other imperfections.

2.2 MATERIALS

A. Galvanized Sheet Steel: Comply with ASTM A 653/A 653M.

1. Galvanized Coating Designation: G60.
2. Exposed-Surface Finish: Mill phosphatized.

B. Stainless-Steel Sheets: Comply with ASTM A 480/A 480M, Type 304, and having a No. 2 finish for concealed ducts and finish for exposed ducts.

C. Aluminum Sheets: Comply with ASTM B 209, Alloy 3003, Temper H14; with mill finish for concealed ducts and standard, 1-side bright finish for exposed ducts.

D. Extruded Aluminum: Comply with ASTM B 221, Alloy 6063, Temper T6.

Copyright 2013 AIA MasterSpec Premium

E. Reinforcement Shapes and Plates: Galvanized-steel reinforcement where installed on galvanized sheet metal ducts; compatible materials for aluminum and stainless-steel ducts.

F. Tie Rods: Galvanized steel, 1/4-inch minimum diameter for lengths 36 inches or less; 3/8-inch minimum diameter for lengths longer than 36 inches.

2.3 BACKDRAFT DAMPERS

A. Description: Gravity balanced.

B. Maximum Air Velocity: 1000 fpm or 1250 fpm, 2000fpm.

C. Maximum System Pressure: 2-inch wg.

D. Frame: Hat-shaped, 0.05-inch- thick, galvanized sheet steel or 0.094-inch- thick, galvanized sheet steel, with welded corners or mechanically attached and mounting flange.

E. Blades: Multiple single-piece blades, center pivoted, off-center pivoted, end pivoted, maximum 6-inchwidth, 0.025-inch- thick, roll-formed aluminum 0.050-inch-thick aluminum sheet with sealed edges.

F. Blade Action: Parallel.

G. Blade Seals: Extruded vinyl, mechanically locked or Neoprene.

H. Blade Axles:

1. Material: Galvanized steel or Stainless steel.
2. Diameter: 0.20 inch.

I. Tie Bars and Brackets: Galvanized steel.

J. Return Spring: Adjustable tension.

K. Bearings: Steel ball or synthetic pivot bushings.

L. Accessories:

1. Adjustment device to permit setting for varying differential static pressure.
2. Counterweights and spring-assist kits for vertical airflow installations.
3. Electric actuators.
4. Chain pulls.
5. Screen Mounting: Front mounted in sleeve.

   a. Sleeve Thickness: 20 gage minimum.
   b. Sleeve Length: 6 inches minimum.

6. Screen Mounting: Rear mounted.
7. Screen Material: Galvanized steel.
8. Screen Type: Bird and Insect.
9. 90-degree stops.

Copyright 2013 AIA MasterSpec Premium

2.4 MANUAL VOLUME DAMPERS

A. Standard, Steel, Manual Volume Dampers:
   1. Standard leakage rating, with linkage outside airstream.
   2. Suitable for horizontal or vertical applications.
   3. Frames:
      a. Frame: Hat-shaped, 0.094-inch- thick, galvanized sheet steel, or 0.05-inch- thick stainless steel.
      b. Mitered and welded corners.
      c. Flanges for attaching to walls and flangeless frames for installing in ducts.
   4. Blades:
      a. Multiple or single blade.
      b. Parallel- or opposed-blade design.
      c. Stiffen damper blades for stability.
      d. Galvanized or Stainless-steel, 0.064 inch thick.
   5. Blade Axles: Galvanized steel or Stainless steel.
   6. Bearings:
      a. Oil-impregnated bronze or Molded synthetic.
      b. Dampers in ducts with pressure classes of 3-inch wg or less shall have axles full length of damper blades and bearings at both ends of operating shaft.
   7. Tie Bars and Brackets: Galvanized steel.

B. Standard, Aluminum, Manual Volume Dampers:
   1. Standard leakage rating, with linkage outside airstream.
   2. Suitable for horizontal or vertical applications.
   3. Frames: Hat-shaped, 0.10-inch- thick, aluminum sheet channels; frames with flanges for attaching to walls and flangeless frames for installing in ducts.
   4. Blades:
      a. Multiple or single blade.
      b. Parallel- or opposed-blade design.
      c. Stiffen damper blades for stability.
      d. Roll-Formed Aluminum Blades: 0.10-inch- thick aluminum sheet.
      e. Extruded-Aluminum Blades: 0.050-inch- thick extruded aluminum.
   5. Blade Axles: Galvanized steel or Stainless steel.
   6. Bearings:
      a. Oil-impregnated bronze or Molded synthetic.
      b. Dampers in ducts with pressure classes of 3-inch wg or less shall have axles full length of damper blades and bearings at both ends of operating shaft.
   7. Tie Bars and Brackets: Aluminum.

Copyright 2013 AIA MasterSpec Premium

2.5 CONTROL DAMPERS

A. Low-leakage rating, with linkage outside airstream, and bearing AMCA's Certified Ratings Seal for both air performance and air leakage.

B. Frames:

1. Hat, U or Angle shaped.
2. 0.094-inch- thick, galvanized sheet steel or 0.05-inch- thick.
3. Mitered and welded corners.

C. Blades:

1. Multiple blade with maximum blade width of 8 inches.
2. Parallel- and opposed-blade design.
3. Galvanized-steel or Stainless steel.
4. 0.064 inch thick single skin.
5. Blade Edging: Closed-cell neoprene.
6. Blade Edging: Inflatable seal blade edging, or replaceable rubber seals.

D. Blade Axles: 1/2-inch-diameter; galvanized steel or stainless steel; blade-linkage hardware of zinc-plated steel and brass; ends sealed against blade bearings.

1. Operating Temperature Range: From minus 40 to plus 200 deg F.

E. Bearings:

1. Oil-impregnated bronze or Molded synthetic.
2. Dampers in ducts with pressure classes of 3-inch wg or less shall have axles full length of damper blades and bearings at both ends of operating shaft.
3. Thrust bearings at each end of every blade.

2.6 FIRE DAMPERS

A. Type: Static and dynamic; rated and labeled according to UL 555 by an NRTL.

B. Closing rating in ducts up to 4-inch wg static pressure class and minimum 2000-fpm velocity.

C. Fire Rating: 1-1/2 and 3 hours.

D. Frame: Curtain type with blades outside airstream, Curtain type with blades outside airstream except when located behind grille where blades may be inside airstream; fabricated with roll-formed, 0.034-inch- thick galvanized steel; with mitered and interlocking corners.

E. Mounting Sleeve: Factory- or field-installed, galvanized sheet steel.

1. Minimum Thickness: 0.05 or 0.138 inch thick, as indicated, and of length to suit application.
2. Exception: Omit sleeve where damper-frame width permits direct attachment of perimeter mounting angles on each side of wall or floor; thickness of damper frame must comply with sleeve requirements.

Copyright 2013 AIA MasterSpec Premium

F. Mounting Orientation: Vertical or horizontal as indicated.

G. Blades: Roll-formed, interlocking, 0.034-inch- thick, galvanized sheet steel. In place of interlocking blades, use full-length, 0.034-inch- thick, galvanized-steel blade connectors.

H. Horizontal Dampers: Include blade lock and stainless-steel closure spring.

I. Heat-Responsive Device: Replaceable, 165 deg F or 212 deg F rated fusible links.

J. Heat-Responsive Device: Electric, resettable link and switch package, factory installed, 165 deg F and 212 deg F rated.

2.7 CORRIDOR DAMPERS

A. General Requirements: Label combination fire and smoke dampers according to UL 555 for 1-hour or 1-1/2-hour rating by an NRTL.

B. Heat-Responsive Device: Replaceable, 165 deg F or 212 deg F rated fusible links.

C. Heat-Responsive Device: Electric resettable link and switch package, factory installed, rated.

D. Frame: Hat-shaped, 0.094-inch- thick, galvanized sheet steel, with welded interlocking, gusseted or mechanically attached corners and mounting flange.

E. Blades: Roll-formed, horizontal, interlocking, 0.034-inch- thick, galvanized sheet steel.

F. Mounting Sleeve: Factory-installed, 0.039-inch- or 0.05-inch- thick, galvanized sheet steel; length to suit wall or floor application.

G. Damper Motors: Modulating or two-position action.

H. Comply with NEMA designation, temperature rating, service factor, enclosure type, and efficiency requirements for motors specified in Section 230513 "Common Motor Requirements for HVAC Equipment."

1. Motor Sizes: Minimum size as indicated. If not indicated, large enough so driven load will not require motor to operate in service factor range above 1.0.
2. Controllers, Electrical Devices, and Wiring: Comply with requirements for electrical devices and connections specified in Section 230923 "Direct Digital Control (DDC) System for HVAC."
3. Permanent-Split-Capacitor or Shaded-Pole Motors: With oil-immersed and sealed gear trains.
4. Spring-Return Motors: Equip with an integral spiral-spring mechanism where indicated. Enclose entire spring mechanism in a removable housing designed for service or adjustments. Size for running torque rating of 150 in. x lbf and breakaway torque rating of 150 in. x lbf.
5. Outdoor Motors and Motors in Outdoor-Air Intakes: Equip with O-ring gaskets designed to make motors weatherproof. Equip motors with internal heaters to permit normal operation at minus 40 deg F.

Copyright 2013 AIA MasterSpec Premium

6. Nonspring-Return Motors: For dampers larger than 25 sq. ft., size motor for running torque rating of 150 in. x lbf and breakaway torque rating of 300 in. x lbf.
7. Electrical Connection: 115 V, single phase, 60 Hz.

2.8 FLANGE CONNECTORS

A. Description: Add-on or roll-formed, factory-fabricated, slide-on transverse flange connectors, gaskets, and components.

B. Material: Galvanized steel.

C. Gage and Shape: Match connecting ductwork.

2.9 TURNING VANES

A. Manufactured Turning Vanes for Metal Ducts: Curved blades of galvanized sheet steel; support with bars perpendicular to blades set; set into vane runners suitable for duct mounting.

1. Acoustic Turning Vanes: Fabricate airfoil-shaped aluminum extrusions with perforated faces and fibrous-glass fill.

B. Manufactured Turning Vanes for Nonmetal Ducts: Fabricate curved blades of resin-bonded fiberglass with acrylic polymer coating; support with bars perpendicular to blades set; set into vane runners suitable for duct mounting.

C. General Requirements: Comply with SMACNA's "HVAC Duct Construction Standards - Metal and Flexible"; Figures 4-3, "Vanes and Vane Runners," and 4-4, "Vane Support in Elbows."

D. Vane Construction: Single or Double wall.

E. Vane Construction: Single wall for ducts up to 48 inches wide and double wall for larger dimensions.

2.10 FLEXIBLE CONNECTORS

A. Materials: Flame-retardant or noncombustible fabrics.

B. Coatings and Adhesives: Comply with UL 181, Class 1.

C. Metal-Edged Connectors: Factory fabricated with a fabric strip 3-1/2 inches wide attached to two strips of 2-3/4-inch- wide, 0.028-inch- thick, galvanized sheet steel or 0.032-inch- thick aluminum sheets. Provide metal compatible with connected ducts.

D. Indoor System, Flexible Connector Fabric: Glass fabric double coated with neoprene.

1. Minimum Weight: 26 oz./sq. yd.
2. Tensile Strength: 480 lbf/inch in the warp and 360 lbf/inch in the filling.
3. Service Temperature: Minus 40 to plus 200 deg F.

Copyright 2013 AIA MasterSpec Premium

E. Outdoor System, Flexible Connector Fabric: Glass fabric double coated with weatherproof, synthetic rubber resistant to UV rays and ozone.

1. Minimum Weight: 24 oz./sq. yd.
2. Tensile Strength: 530 lbf/inch in the warp and 440 lbf/inch in the filling.
3. Service Temperature: Minus 50 to plus 250 deg F.

F. High-Corrosive-Environment System, Flexible Connectors: Glass fabric with chemical-resistant coating.

1. Minimum Weight: 14 oz./sq. yd.
2. Tensile Strength: 450 lbf/inch in the warp and 340 lbf/inch in the filling.
3. Service Temperature: Minus 67 to plus 500 deg F.

G. Thrust Limits: Combination coil spring and elastomeric insert with spring and insert in compression, and with a load stop. Include rod and angle-iron brackets for attaching to fan discharge and duct.

1. Frame: Steel, fabricated for connection to threaded rods and to allow for a maximum of 30 degrees of angular rod misalignment without binding or reducing isolation efficiency.
2. Outdoor Spring Diameter: Not less than 80 percent of the compressed height of the spring at rated load.
3. Minimum Additional Travel: 50 percent of the required deflection at rated load.
4. Lateral Stiffness: More than 80 percent of rated vertical stiffness.
5. Overload Capacity: Support 200 percent of rated load, fully compressed, without deformation or failure.
6. Elastomeric Element: Molded, oil-resistant rubber or neoprene.
7. Coil Spring: Factory set and field adjustable for a maximum of 1/4-inch movement at start and stop.

2.11 FLEXIBLE DUCTS

A. Noninsulated, Flexible Duct: UL 181, Class 1, 2-ply vinyl film supported by helically wound, spring-steel wire.

1. Pressure Rating: 10-inch wg positive and 1.0-inch wg negative.
2. Maximum Air Velocity: 4000 fpm.
3. Temperature Range: Minus 10 to plus 160 deg F.

B. Noninsulated, Flexible Duct: UL 181, Class 1, black polymer film supported by helically wound, spring-steel wire.

1. Pressure Rating: 4-inch wg positive and 0.5-inch wg negative.
2. Maximum Air Velocity: 4000 fpm.
3. Temperature Range: Minus 20 to plus 175 deg F.

C. Noninsulated, Flexible Duct: UL 181, Class 1, multiple layers of aluminum laminate supported by helically wound, spring-steel wire.

1. Pressure Rating: 10-inch wg positive and 1.0-inch wg negative.

Copyright 2013 AIA MasterSpec Premium

2. Maximum Air Velocity: 4000 fpm.
3. Temperature Range: Minus 20 to plus 210 deg F.

D. Noninsulated, Flexible Duct: UL 181, Class 1, aluminum laminate and polyester film with latex adhesive supported by helically wound, spring-steel wire.

1. Pressure Rating: 10-inch wg positive and 1.0-inch wg negative.
2. Maximum Air Velocity: 4000 fpm.
3. Temperature Range: Minus 20 to plus 210 deg F.

E. Noninsulated, Flexible Duct: UL 181, Class 0, interlocking spiral of aluminum foil.

1. Pressure Rating: 8-inch wg positive or negative.
2. Maximum Air Velocity: 5000 fpm.
3. Temperature Range: Minus 100 to plus 435 deg F.

F. Insulated, Flexible Duct: UL 181, Class 1, 2-ply vinyl film supported by helically wound, spring-steel wire; fibrous-glass insulation; polyethylene or aluminized vapor-barrier film.

1. Pressure Rating: 10-inch wg positive and 1.0-inch wg negative.
2. Maximum Air Velocity: 4000 fpm
3. Temperature Range: Minus 10 to plus 160 deg F

G. Insulated, Flexible Duct: UL 181, Class 1, black polymer film supported by helically wound, spring-steel wire; fibrous-glass insulation; polyethylene or aluminized vapor-barrier film.

1. Pressure Rating: 4-inch wg positive and 0.5-inch wg negative.
2. Maximum Air Velocity: 4000 fpm.
3. Temperature Range: Minus 20 to plus 175 deg F.

H. Insulated, Flexible Duct: UL 181, Class 1, multiple layers of aluminum laminate supported by helically wound, spring-steel wire; fibrous-glass insulation; polyethylene or aluminized vapor-barrier film.

1. Pressure Rating: 10-inch wg positive and 1.0-inch wg negative.
2. Maximum Air Velocity: 4000 fpm
3. Temperature Range: Minus 20 to plus 210 deg F.

I. Insulated, Flexible Duct: UL 181, Class 1, aluminum laminate and polyester film with latex adhesive supported by helically wound, spring-steel wire; fibrous-glass insulation; polyethylene or aluminized vapor-barrier film.

1. Pressure Rating: 10-inch wg positive and 1.0-inch wg negative.
2. Maximum Air Velocity: 4000 fpm.
3. Temperature Range: Minus 20 to plus 210 deg F.

J. Insulated, Flexible Duct: UL 181, Class 0, interlocking spiral of aluminum foil; fibrous-glass insulation; polyethylene or aluminized vapor-barrier film.

1. Pressure Rating: 8-inch wg positive or negative.
2. Maximum Air Velocity: 5000 fpm.

Copyright 2013 AIA MasterSpec Premium

3. Temperature Range: Minus 20 to plus 250 deg F.

K. Flexible Duct Connectors:

1. Clamps: Stainless-steel band with cadmium-plated hex screw to tighten band with a worm-gear action in sizes 3 through 18 inches, to suit duct size.
2. Non-Clamp Connectors: Liquid adhesive plus tape.

2.12 DUCT ACCESSORY HARDWARE

A. Instrument Test Holes: Cast iron or cast aluminum to suit duct material, including screw cap and gasket. Size to allow insertion of pitot tube and other testing instruments and of length to suit duct-insulation thickness.

B. Adhesives: High strength, quick setting, neoprene based, waterproof, and resistant to gasoline and grease.

PART 3 - EXECUTION

3.1 INSTALLATION

A. Install duct accessories according to applicable details in SMACNA's "HVAC Duct Construction Standards - Metal and Flexible" for metal ducts and in NAIMA AH116, "Fibrous Glass Duct Construction Standards," for fibrous-glass ducts.

B. Install duct accessories of materials suited to duct materials; use galvanized-steel accessories in galvanized-steel and fibrous-glass ducts, stainless-steel accessories in stainless-steel ducts, and aluminum accessories in aluminum ducts.

C. Install backdraft or control dampers at inlet of exhaust fans or exhaust ducts as close as possible to exhaust fan unless otherwise indicated.

D. Install volume dampers at points on supply, return, and exhaust systems where branches extend from larger ducts. Where dampers are installed in ducts having duct liner, install dampers with hat channels of same depth as liner, and terminate liner with nosing at hat channel.

1. Install steel volume dampers in steel ducts.
2. Install aluminum volume dampers in aluminum ducts.

E. Set dampers to fully open position before testing, adjusting, and balancing.

F. Install test holes at fan inlets and outlets and elsewhere as indicated.

G. Install fire dampers according to UL listing.

H. Install access doors with swing against duct static pressure.

I. Label access doors according to Section 230553 "Identification for HVAC Piping and Equipment" to indicate the purpose of access door.

Copyright 2013 AIA MasterSpec Premium

J. Install flexible connectors to connect ducts to equipment.

K. For fans developing static pressures of 5-inch wg and more, cover flexible connectors with loaded vinyl sheet held in place with metal straps.

L. Connect diffusers or light troffer boots to ducts directly or with maximum 60-inch lengths of flexible duct clamped or strapped in place.

M. Connect flexible ducts to metal ducts with draw bands.

N. Install duct test holes where required for testing and balancing purposes.

O. Install thrust limits at centerline of thrust, symmetrical on both sides of equipment. Attach thrust limits at centerline of thrust and adjust to a maximum of 1/4-inch movement during start and stop of fans.

3.2 FIELD QUALITY CONTROL

A. Tests and Inspections:

1. Operate dampers to verify full range of movement.
2. Inspect locations of access doors and verify that purpose of access door can be performed.
3. Operate fire, smoke, and combination fire and smoke dampers to verify full range of movement and verify that proper heat-response device is installed.
4. Inspect turning vanes for proper and secure installation.
5. Operate remote damper operators to verify full range of movement of operator and damper.

END OF SECTION 233300

SECTION 233416 - CENTRIFUGAL HVAC FANS

PART 1 - GENERAL

1.1 RELATED DOCUMENTS

A. Drawings and general provisions of the Contract, including General and Supplementary Conditions and Division 01 Specification Sections, apply to this Section.

1.2 SUMMARY

A. Section Includes: For each product.

1. Airfoil centrifugal fans.
2. Backward-inclined centrifugal fans.
3. Forward-curved centrifugal fans.
4. Plenum fans.
5. Plug fans.

1.3 ACTION SUBMITTALS

A. Product Data:

1. Include rated capacities, furnished specialties, and accessories for each fan.
2. Certified fan performance curves with system operating conditions indicated.
3. Certified fan sound-power ratings.
4. Motor ratings and electrical characteristics, plus motor and electrical accessories.
5. Material thickness and finishes, including color charts.
6. Dampers, including housings, linkages, and operators.

B. Shop Drawings:

1. Include plans, elevations, sections, and attachment details.
2. Include details of equipment assemblies. Indicate dimensions, weights, loads, required clearances, method of field assembly, components, and location and size of each field connection.
3. Include diagrams for power, signal, and control wiring.
4. Design Calculations: Calculate requirements for selecting vibration isolators and seismic restraints and for designing vibration isolation bases.
5. Vibration Isolation Base Details: Detail fabrication, including anchorages and attachments to structure and to supported equipment. Include auxiliary motor slides and rails, and base weights.

1.4 INFORMATIONAL SUBMITTALS

A. Field quality-control reports.

1.5 CLOSEOUT SUBMITTALS

A. Operation and Maintenance Data: For centrifugal fans to include in emergency, operation, and maintenance manuals.

1.6 MAINTENANCE MATERIAL SUBMITTALS

A. Belts: One set(s) for each belt-driven unit.

PART 2 - PRODUCTS

2.1 PERFORMANCE REQUIREMENTS

A. AMCA Compliance:

1. Comply with AMCA performance requirements and bear the AMCA-Certified Ratings Seal.
2. Operating Limits: Classify according to AMCA 99.

B. Unusual Service Conditions:

1. Ambient Temperature: 0 F.
2. High humidity.

C. Electrical Components, Devices, and Accessories: Listed and labeled as defined in NFPA 70, by a qualified testing agency, and marked for intended location and application.

a. Motor Enclosure: Open, dripproof, Totally enclosed, fan cooled, Totally enclosed, air over Open, externally ventilated.
b. Enclosure Materials: Cast iron, Cast aluminum or Rolled steel.
c. Motor Bearings: permanently lubricated.
d. Efficiency: Premium efficient.

2. Vibration Isolators: Spring, isolators double stud having a static deflection of 1 inch.
3. Spark-Resistance Class: C.

2.2 BACKWARD-INCLINED CENTRIFUGAL FANS

A. Description:

1. Factory-fabricated, -assembled, -tested, and -finished, direct centrifugal fans consisting of housing, wheel, fan shaft, bearings, motor, drive assembly, and support structure.
2. Deliver fans as factory-assembled units, to the extent allowable by shipping limitations.
3. Factory-installed and -wired disconnect switch.

B. Housings:

1. Formed panels to make curved-scroll housings with shaped cutoff.

2. Panel Bracing: Steel angle- or channel-iron member supports for mounting and supporting fan scroll, wheel, motor, and accessories.

C. Backward-Inclined Wheels:

1. Single-width-single-inlet and double-width-double-inlet construction with curved inlet flange, backplate, backward-inclined blades, and fastened to shaft with set screws.
2. Welded or riveted to flange and backplate; cast-iron or cast-steel hub riveted to backplate.

D. Shafts:

1. Statically and dynamically balanced and selected for continuous operation at maximum rated fan speed and motor horsepower, with adjustable alignment and belt tensioning.
2. Turned, ground, and polished hot-rolled steel with keyway. Ship with protective coating of lubricating oil.
3. Designed to operate at no more than 70 percent of first critical speed at top of fan's speed range.

E. Prelubricated and Sealed Shaft Bearings:

1. Self-aligning, pillow-block-type ball bearings.
2. Ball-Bearing Rating Life: ABMA 9, Ll0 at 120,000 hours.

F. Accessories:

1. Access for Inspection, Cleaning, and Maintenance: Comply with requirements in ASHRAE 62.1.
2. Scroll Drain Connection: NPS 1 steel pipe coupling welded to low point of fan scroll.
3. Companion Flanges: Rolled flanges for duct connections of same material as housing.
4. Variable Inlet Vanes: With blades supported at both ends with two permanently lubricated bearings of same material as housing. Variable mechanism terminating in single control lever with control shaft for double-width fans.
5. Discharge Dampers: Assembly with parallel or opposed blades constructed of two plates formed around and to shaft, channel frame, and sealed ball bearings; with blades linked outside of airstream to single control lever of same material as housing.
6. Inlet Screens: Grid screen of same material as housing.
7. Shaft Cooler: Metal disk between bearings and fan wheel, designed to dissipate heat from shaft.
8. Spark-Resistant Construction: AMCA 99.
9. Shaft Seals: Airtight seals installed around shaft on drive side of single-width fans.
10. Weather Cover: Enameled-steel sheet with ventilation slots, bolted to housing.

2.3 FORWARD-CURVED CENTRIFUGAL FANS

A. Description:

1. Factory-fabricated, -assembled, -tested, and -finished, direct centrifugal fans consisting of housing, wheel, fan shaft, bearings, motor, drive assembly, and support structure.
2. Deliver fans as factory-assembled units, to the extent allowable by shipping limitations.
3. Factory-installed and -wired disconnect switch.

B. Housings:

1. Formed panels to make curved-scroll housings with shaped cutoff.
2. Panel Bracing: Steel angle- or channel-iron member supports for mounting and supporting fan scroll, wheel, motor, and accessories

C. Forward-Curved Wheels:

1. Black-enameled or galvanized-steel construction with inlet flange, backplate, shallow blades with inlet and tip curved forward in direction of airflow.
2. Mechanically secured to flange and backplate; cast-steel hub swaged to backplate and fastened to shaft with set screws.

D. Shafts:

1. Statically and dynamically balanced and selected for continuous operation at maximum rated fan speed and motor horsepower, with adjustable alignment and belt tensioning.
2. Turned, ground, and polished hot-rolled steel with keyway. Ship with protective coating of lubricating oil.
3. Designed to operate at no more than 70 percent of first critical speed at top of fan's speed range.

E. Prelubricated and Sealed Shaft Bearings:

1. Self-aligning, pillow-block-type ball bearings.
2. Ball-Bearing Rating Life: ABMA 9, Ll0 at 120,000 hours.

F. Accessories:

1. Access for Inspection, Cleaning, and Maintenance: Comply with requirements in ASHRAE 62.1.
2. Scroll Drain Connection: NPS 1 steel pipe coupling welded to low point of fan scroll.
3. Companion Flanges: Rolled flanges for duct connections of same material as housing.
4. Variable Inlet Vanes: With blades supported at both ends with two permanently lubricated bearings of same material as housing. Variable mechanism terminating in single control lever with control shaft for double-width fans.
5. Discharge Dampers: Assembly with parallel or opposed blades constructed of two plates formed around and to shaft, channel frame, and sealed ball bearings; with blades linked outside of airstream to single control lever of same material as housing.
6. Inlet Screens: Grid screen of same material as housing.
7. Shaft Cooler: Metal disk between bearings and fan wheel, designed to dissipate heat from shaft.
8. Spark-Resistant Construction: AMCA 99.
9. Shaft Seals: Airtight seals installed around shaft on drive side of single-width fans.
10. Weather Cover: Enameled-steel sheet with ventilation slots, bolted to housing.

2.4 MOTORS

A. Comply with NEMA designation, temperature rating, service factor, and efficiency requirements for motors specified in Section 230513 "Common Motor Requirements for HVAC Equipment."

2.5 SOURCE QUALITY CONTROL

A. Sound-Power Level Ratings: Comply with AMCA 301, "Methods for Calculating Fan Sound Ratings from Laboratory Test Data." Factory test fans according to AMCA 300, "Reverberant Room Method for Sound Testing of Fans." Label fans with the AMCA-Certified Ratings Seal.

B. Fan Performance Ratings: Establish flow rate, pressure, power, air density, speed of rotation, and efficiency by factory tests and ratings according to AMCA 210/ASHRAE 51, "Laboratory Methods of Testing Fans for Certified Aerodynamic Performance Rating."

PART 3 - EXECUTION

3.1 INSTALLATION

A. Install centrifugal fans level and plumb.

B. Disassemble and reassemble units, as required for moving to the final location, according to manufacturer's written instructions.

C. Lift and support units with manufacturer's designated lifting or supporting points.

D. Equipment Mounting:

1. Install centrifugal fans on cast-in-place concrete equipment base(s).
2. Comply with requirements for vibration isolation devices specified in Section 230548.13 "Vibration Controls for HVAC."

E. Curb Support: Install roof curb on roof structure, level and secure, according to "The NRCA Roofing and Waterproofing Manual," Low-Slope Membrane Roofing Construction Details Section, Illustration "Raised Curb Detail for Rooftop Air Handling Units and Ducts." Install and secure centrifugal fans on curbs, and coordinate roof penetrations and flashing with roof construction. Secure units to curb support with anchor bolts.

F. Unit Support: Install centrifugal fans level on structural curbs. Coordinate wall penetrations and flashing with wall construction. Secure units to structural support with anchor bolts

G. Install units with clearances for service and maintenance.

H. Label fans according to requirements specified in Section 230553 "Identification for HVAC Piping and Equipment."

3.2 CONNECTIONS

A. Drawings indicate general arrangement of ducts and duct accessories. Make final duct connections with flexible connectors. Flexible connectors are specified in Section 233300 "Air Duct Accessories."

B. Install ducts adjacent to fans to allow service and maintenance.

C. Install piping from scroll drain connection, with trap with seal equal to 1.5 times specified static pressure, to nearest floor drain with pipe sizes matching the drain connection.

3.3 FIELD QUALITY CONTROL

A. Testing Agency: Owner will engage a qualified testing agency to perform tests and inspections.

B. Perform the following tests and inspections:

1. Verify that shipping, blocking, and bracing are removed.
2. Verify that unit is secure on mountings and supporting devices and that connections to ducts and electrical components are complete. Verify that proper thermal-overload protection is installed in motors, starters, and disconnect switches.
3. Verify that cleaning and adjusting are complete.
4. Disconnect fan drive from motor, verify proper motor rotation direction, and verify fan wheel free rotation and smooth bearing operation. Reconnect fan drive system, align and adjust belts, and install belt guards.
5. Adjust belt tension.
6. Adjust damper linkages for proper damper operation.
7. Verify lubrication for bearings and other moving parts.
8. Verify that manual and automatic volume control and fire and smoke dampers in connected ductwork systems are in fully open position.
9. See Section 230593 "Testing, Adjusting, and Balancing for HVAC" for testing, adjusting, and balancing procedures.
10. Remove and replace malfunctioning units and retest as specified above.

C. Test and adjust controls and safeties. Controls and equipment will be considered defective if they do not pass tests and inspections.

D. Prepare test and inspection reports.

3.4 DEMONSTRATION

A. Train Owner's maintenance personnel to adjust, operate, and maintain centrifugal fans.

END OF SECTION 233416

Copyright 2014 AIA MasterSpec Premium

SECTION 233713.13 - AIR DIFFUSERS

PART 1 - GENERAL

1.1 RELATED DOCUMENTS

A. Drawings and general provisions of the Contract, including General and Supplementary Conditions and Division 01 Specification Sections, apply to this Section.

1.2 SUMMARY

A. Section Includes:
1. Rectangular and square ceiling diffusers.
2. Perforated diffusers.
3. Louver face diffusers.

B. Related Requirements:

1. Section 233300 "Air Duct Accessories" for fire and smoke dampers and volume-control dampers not integral to diffusers.
2. Section 233713.23 "Air Registers and Grilles" for adjustable-bar register and grilles, fixed-face registers and grilles, and linear bar grilles.

1.3 ACTION SUBMITTALS

A. Product Data: For each type of product.

1. Data Sheet: Indicate materials of construction, finish, and mounting details; and performance data including throw and drop, static-pressure drop, and noise ratings.
2. Diffuser Schedule: Indicate drawing designation, room location, quantity, model number, size, and accessories furnished.

B. Samples: For each exposed product and for each color and texture specified. Actual size of smallest diffuser indicated.

C. Samples for Initial Selection: For diffusers with factory-applied color finishes. Actual size of smallest diffuser indicated.

D. Samples for Verification: For diffusers, in manufacturer's standard sizes to verify color selected. Actual size of smallest diffuser indicated.

1.4 INFORMATIONAL SUBMITTALS

A. Coordination Drawings: Reflected ceiling plans, drawn to scale, on which the following items are shown and coordinated with each other, using input from installers of the items involved:

Copyright 2014 AIA MasterSpec Premium

1. Ceiling suspension assembly members.
2. Method of attaching hangers to building structure.
3. Size and location of initial access modules for acoustical tile.
4. Ceiling-mounted items including lighting fixtures, diffusers, grilles, speakers, sprinklers, access panels, and special moldings.
5. Duct access panels.

B. Source quality-control reports.

PART 2 - PRODUCTS

2.1 RECTANGULAR AND SQUARE CEILING DIFFUSERS

A. Devices shall be specifically designed for variable-air-volume flows.

B. Material: Steel or Aluminum.

C. Finish: Baked enamel, color selected by Architect.

D. Face Size: 24 by 24 inches and 12 by 12 inches.

E. Face Style: Three cone.

F. Mounting: Surface.

G. Pattern: Fixed.

H. Dampers: Radial opposed blade.

I. Accessories:

1. Equalizing grid.
2. Plaster ring.
3. Safety chain.
4. Wire guard.
5. Sectorizing baffles.
6. Operating rod extension.

2.2 PERFORATED DIFFUSERS

A. Devices shall be specifically designed for variable-air-volume flows.

B. Material: Steel backpan and pattern controllers, with aluminum face.

C. Finish: Baked enamel, color selected by Architect.

D. Face Size**:** 12 by 12 inches.

E. Duct Inlet: Round or Square.

Copyright 2014 AIA MasterSpec Premium

F. Face Style: Flush.

G. Mounting: Surface.

H. Pattern Controller: Four louvered deflector patches, Fixed with curved blades at inlet, Adjustable with louvered pattern modules at inlet.

I. Dampers: Opposed blade or Radial opposed blade.

J. Accessories:

1. Equalizing grid.
2. Plaster ring.
3. Safety chain.
4. Wire guard.
5. Sectorizing baffles.
6. Operating rod extension.

2.3 LOUVER FACE DIFFUSERS

A. Devices shall be specifically designed for variable-air-volume flows.

B. Material: Steel or Aluminum.

C. Finish: Baked enamel, color selected by Architect.

D. Face Size: 12x12 inches and 24x24 inches.

E. Mounting: Surface.

F. Pattern: One-way, Four-way core style.

G. Dampers: Radial opposed blade.

H. Accessories:

1. Square to round neck adaptor.
2. Adjustable pattern vanes.
3. Throw reducing vanes.
4. Equalizing grid.
5. Plaster ring.
6. Safety chain.
7. Wire guard.
8. Sectorizing baffles.
9. Operating rod extension.

2.4 SOURCE QUALITY CONTROL

A. Verification of Performance: Rate diffusers according to ASHRAE 70, "Method of Testing for Rating the Performance of Air Outlets and Inlets."

Copyright 2014 AIA MasterSpec Premium

PART 3 - EXECUTION

3.1 EXAMINATION

A. Examine areas and conditions for compliance with requirements for installation tolerances and other conditions affecting performance of equipment

B. Proceed with installation only after unsatisfactory conditions have been corrected.

3.2 INSTALLATION

A. Install deffusers level and plumb.

B. Ceiling-Mounted Outlets and Inlets: Drawings indicate general arrangement of duct, fittings,and accessories.Air outlet and inlet locations have been indicated to achieve design requirements for air volume, noise criteria, airflow pattern, throw, and pressure drop.Make final locations where indicated,as much as practical.For units instaleted in lay-in ceiling panels, locate units in center of panel.Where architectural features or others items conflict with installation, notify Architect for a determination of final location.

C. Install diffusers with airtight connections to ducts and to allow service and maintenance of dampers,air extractors, and fire dampers.

3.3 ADJUSTING

A. After installation, adjust diffusers to air patterns indicated, or as directed, before starting air balancing.

END OF SECTION 221117

Copyright 2014 AIA MasterSpec Premium

SECTION 233713.23 - AIR REGISTERS AND GRILLES

PART 1 - GENERAL

1.1 RELATED DOCUMENTS

A. Drawings and general provisions of the Contract, including General and Supplementary Conditions and Division 01 Specification Sections, apply to this Section.

1.2 SUMMARY

A. Section Includes:

1. Adjustable blade face grilles.

B. Related Requirements:

1. Section 233300 "Air Duct Accessories" for fire and smoke dampers and volume-control dampers not integral to registers and grilles.
2. Section 233713.13 "Air Diffusers" for various types of air diffusers.

1.3 ACTION SUBMITTALS

A. Product Data: For each type of product.

1. Data Sheet: Indicate materials of construction, finish, and mounting details; and performance data including throw and drop, static-pressure drop, and noise ratings.
2. Register and Grille Schedule: Indicate drawing designation, room location, quantity, model number, size, and accessories furnished.

B. Samples: For each exposed product and for each color and texture specified. Smallest size register and grille indicated.

C. Samples for Initial Selection: For registers and grilles with factory-applied color finishes. Smallest size register and grille indicated.

D. Samples for Verification: For registers and grilles, in manufacturer's standard sizes to verify color selected. Smallest size register and grille indicated.

1.4 INFORMATIONAL SUBMITTALS

A. Coordination Drawings: Reflected ceiling plans, drawn to scale, on which the following items are shown and coordinated with each other, using input from installers of the items involved:

1. Ceiling suspension assembly members.
2. Method of attaching hangers to building structure.

Copyright 2014 AIA MasterSpec Premium

3. Size and location of initial access modules for acoustical tile.
4. Ceiling-mounted items including lighting fixtures, diffusers, grilles, speakers, sprinklers, access panels, and special moldings.
5. Duct access panels.

B. Source quality-control reports.

PART 2 - PRODUCTS

2.1 GRILLES

A. Adjustable Blade Face Grille:
1. Material: Aluminum.
2. Finish: Baked enamel, color selected by Architect.
3. Face Blade Arrangement: Horizontal spaced 3/4 inch apart.
4. Core Construction: Integral.
5. Frame: 1-1/4 inches wide.
6. Mounting: Countersunk screw.
7. Accessories:

a. Front-blade gang operator.
b. Aluminum opposed blade damper

2.2 SOURCE QUALITY CONTROL

A. Verification of Performance: Rate registers and grilles according to ASHRAE 70, "Method of Testing for Rating the Performance of Air Outlets and Inlets."

PART 3 - EXECUTION

3.1 EXAMINATION

A. Examine areas where registers and grilles are installed for compliance with requirements for installation tolerances and other conditions affecting performance of equipment.

B. Proceed with installation only after unsatisfactory conditions have been corrected.

3.2 INSTALLATION

A. Install registers and grilles level and plumb.

B. Outlets and Inlets Locations: Drawings indicate general arrangement of ducts, fittings, and accessories. Air outlet and inlet locations have been indicated to achieve design requirements for air volume, noise criteria, airflow pattern, throw, and pressure drop. Make final locations where indicated, as much as practical. For units installed in lay-in ceiling panels, locate units in

Copyright 2014 AIA MasterSpec Premium

the center of panel. Where architectural features or other items conflict with installation, notify Architect for a determination of final location.

C. Install registers and grilles with airtight connections to ducts and to allow service and maintenance of dampers, air extractors, and fire dampers.

3.3 ADJUSTING

A. After installation, adjust registers and grilles to air patterns indicated, or as directed, before starting air balancing.

END OF SECTION 233713.23

SECTION 234100 - PARTICULATE AIR FILTRATION

PART 1 - GENERAL

1.1 RELATED DOCUMENTS

A. Drawings and general provisions of the Contract, including General and Supplementary Conditions and Division 01 Specification Sections, apply to this Section.

1.2 SUMMARY

A. Section Includes:
   1. Flat panel filters.
   2. Pleated panel filters.
   3. Front- and rear-access filter frames.
   4. Side-service housings.
   5. Filter gages.

1.3 ACTION SUBMITTALS

A. Product Data: For each type of product indicated. Include dimensions; operating characteristics; required clearances and access; rated flow capacity, including initial and final pressure drop at rated airflow; efficiency and test method; fire classification; furnished specialties; and accessories for each model indicated.

B. Shop Drawings: For air filters. Include plans, elevations, sections, details, and attachments to other work.

   1. Show filter rack assembly, dimensions, materials, and methods of assembly of components.
   2. Include setting drawings, templates, and requirements for installing anchor bolts and anchorages.
   3. Include diagram for power, signal, and control wiring.

1.4 INFORMATIONAL SUBMITTALS

A. Field quality-control reports.

1.5 CLOSEOUT SUBMITTALS

A. Operation and Maintenance Data: For each type of filter and rack to include in emergency, operation, and maintenance manuals.

1.6 MAINTENANCE MATERIAL SUBMITTALS

A. Furnish extra materials that match products installed and that are packaged with protective covering for storage and identified with labels describing contents.

1. Provide one complete set(s) of filters for each filter bank. If system includes prefilters, provide only prefilters.
2. Provide one container(s) of red oil for inclined manometer filter gage.

PART 2 - PRODUCTS

2.1 PERFORMANCE REQUIREMENTS

A. ASHRAE Compliance:

1. Comply with applicable requirements in ASHRAE 62.1, Section 4 - "Outdoor Air Quality"; Section 5 - "Systems and Equipment"; and Section 7 - "Construction and Startup."
2. Comply with ASHRAE 52.2 for MERV for methods of testing and rating air-filter units.

B. Comply with NFPA 90A and NFPA 90B.

C. Electrical Components, Devices, and Accessories: Listed and labeled as defined in NFPA 70, by a qualified testing agency, and marked for intended location and application.

2.2 FLAT PANEL FILTERS

A. Description: Factory-fabricated, self-supported, flat, nonpleated, panel-type, disposable air filters with holding frames.

B. Filter Unit Class: UL 900, Class 1 or Class 2.

C. Media: Interlaced glass or synthetic fibers or Cotton and synthetic fibers coated with nonflammable adhesive.

1. Adhesive: As recommended by air-filter manufacturer and with a VOC content of 80 g/L or less.
2. Adhesive: As recommended by air-filter manufacturer and that complies with the testing and product requirements of the California Department of Public Health's "Standard Method for the Testing and Evaluation of Volatile Organic Chemical Emissions from Indoor Sources Using Environmental Chambers."
3. Media shall be coated with an antimicrobial agent.
4. Metal Retainer: Upstream side and downstream side.

D. Filter-Media Frame: Cardboard with perforated metal retainer.

E. Mounting Frames: Welded galvanized steel, with gaskets and fasteners; suitable for bolting together into built-up filter banks.

2.3 PLEATED PANEL FILTERS

A. Description: Factory-fabricated, self-supported, extended-surface, pleated, panel-type, disposable air filters with holding frames.

B. Filter Unit Class: UL 900, Class 1 or Class 2.

C. Media: Interlaced glass or synthetic fibers or Cotton and synthetic fibers coated with nonflammable adhesive.

1. Adhesive: As recommended by air-filter manufacturer and with a VOC content of 80 g/L or less.
2. Adhesive: As recommended by air-filter manufacturer and that complies with the testing and product requirements of the California Department of Public Health's "Standard Method for the Testing and Evaluation of Volatile Organic Chemical Emissions from Indoor Sources Using Environmental Chambers."
3. Media shall be coated with an antimicrobial agent.
4. Separators shall be bonded to the media to maintain pleat configuration.
5. Welded-wire grid shall be on downstream side to maintain pleat.
6. Media shall be bonded to frame to prevent air bypass.
7. Support members on upstream and downstream sides to maintain pleat spacing.

D. Filter-Media Frame: Cardboard frame with perforated metal retainer sealed or bonded to the media.

E. Mounting Frames: Welded galvanized steel, with gaskets and fasteners; suitable for bolting together into built-up filter banks.

2.4 FRONT- AND REAR-ACCESS FILTER FRAMES

A. Framing System: Galvanized-steel or Aluminum framing members with access for either upstream (front) or downstream (rear) filter servicing, cut to size and prepunched for assembly into modules. Vertically support filters to prevent deflection of horizontal members without interfering with either filter installation or operation.

B. Prefilters: Incorporate a separate track with spring clips, removable from front or back.

C. Sealing: Factory-installed, positive-sealing device for each row of filters, to ensure seal between gasketed filter elements and to prevent bypass of unfiltered air.

2.5 SIDE-SERVICE HOUSINGS

A. Description: Factory-assembled, side-service housings, constructed of galvanized steel or aluminum, with flanges to connect to duct or casing system.

B. Prefilters: Integral tracks to accommodate 2-inch- (50-mm-) deep, disposable or washable filters.

C. Access Doors: Hinged, with continuous gaskets on perimeter and positive-locking devices, and arranged so filter cartridges can be loaded from either access door.

D. Sealing: Incorporate positive-sealing gasket material on channels to seal top and bottom of filter cartridge frames and to prevent bypass of unfiltered air.

2.6 FILTER GAGES

A. Diaphragm-type gage with dial and pointer in metal case, vent valves, black figures on white background, and front recalibration adjustment.
   1. Diameter: 4-1/2 inches or 2 inches.
   2. Scale Range for Filter Media Having a Recommended Final Resistance of 0.5-Inch wg or Less: 0- to 0.5-inch wg.
   3. Scale Range for Filter Media Having a Recommended Final Resistance of 0.5- to 1.0-Inch wg or Less: 0- to 1.0-inch wg.
   4. Scale Range for Filter Media Having a Recommended Final Resistance of 1.0- to 2.0-Inch wg or Less: 0- to 2.0-inch wg.
   5. Scale Range for Filter Media Having a Recommended Final Resistance of 2.0- to 3.0-Inch wg or Less: 0- to 3.0-inch wg.
   6. Scale Range for Filter Media Having a Recommended Final Resistance of 3.0- to 4.0-Inch wg or Less: 0- to 4.0-inch wg.

B. Manometer-Type Filter Gage: Molded plastic, with epoxy-coated aluminum scale and logarithmic-curve tube gage with integral leveling gage, graduated to read from 0- to 3.0-inch wg, and accurate within 3 percent of the full-scale range.

C. Accessories: Static-pressure tips, tubing, gage connections, and mounting bracket.

PART 3 - EXECUTION

3.1 INSTALLATION

A. Equipment Mounting:

   1. Install filter assemblies on cast-in-place concrete equipment base(s).

B. Position each filter unit with clearance for normal service and maintenance. Anchor filter holding frames to substrate.

C. Install filters in position to prevent passage of unfiltered air.

D. Install filter gage for each filter bank.

E. Do not operate fan system until filters (temporary or permanent) are in place. Replace temporary filters used during construction and testing with new, clean filters.

F. Install filter-gage, static-pressure taps upstream and downstream from filters. Install filter gages on filter banks with separate static-pressure taps upstream and downstream from filters. Mount filter gages on outside of filter housing or filter plenum in an accessible position. Adjust and level inclined gages.

G. Coordinate filter installations with duct and air-handling-unit installations.

3.2 FIELD QUALITY CONTROL

A. Testing Agency: Owner will engage a qualified testing agency to perform tests and inspections.

B. Manufacturer's Field Service: Engage a factory-authorized service representative to test and inspect components, assemblies, and equipment installations, including connections.

C. Perform the following tests and inspections[with the assistance of a factory-authorized service representative]:

1. Operate automatic roll filters to demonstrate compliance with requirements.
2. Test for leakage of unfiltered air while system is operating.

D. Air filter will be considered defective if it does not pass tests and inspections.

E. Prepare test and inspection reports.

3.3 CLEANING

A. After completing system installation and testing, adjusting, and balancing of air-handling and air-distribution systems, clean filter housings and install new filter media.

END OF SECTION 234100

Copyright 2013 AIA MasterSpec Premium

SECTION 237200 - AIR-TO-AIR ENERGY RECOVERY EQUIPMENT

PART 1 - GENERAL

1.1 RELATED DOCUMENTS

A. Drawings and general provisions of the Contract, including General and Supplementary Conditions and Division 01 Specification Sections, apply to this Section.

1.2 SUMMARY

A. Section Includes:

1. Total heat exchanges

1.3 PERFORMANCE REQUIREMENTS

A. Delegated Design: Design vibration isolation and seismic-restraint details, including comprehensive engineering analysis by a qualified professional engineer, using performance requirements and design criteria indicated.

B. Seismic Performance: Air-to-air energy recovery equipment shall withstand the effects of earthquake motions determined according to ASCE/SEI 7.

1. The term "withstand" means "the unit will remain in place without separation of any parts from the device when subjected to the seismic forces specified.

1.4 ACTION SUBMITTALS

A. Product Data: For each type of product indicated. Include rated capacities, operating characteristics, furnished specialties, and accessories.

B. Shop Drawings: For air-to-air energy recovery equipment. Include plans, elevations, sections, details, and attachments to other work.

1. Detail equipment assemblies and indicate dimensions, weights, loads, required clearances, method of field assembly, components, and location and size of each field connection.
2. Wiring Diagrams: For power, signal, and control wiring.

C. Delegated-Design Submittal: For air-to-air energy recovery equipment indicated to comply with performance requirements and design criteria, including analysis data signed and sealed by the qualified professional engineer responsible for their preparation.

1. Detail fabrication and assembly of air-to-air energy recovery equipment.

Copyright 2013 AIA MasterSpec Premium

2. Vibration Isolation Base Details: Detail fabrication including anchorages and attachments to structure and to supported equipment. Include adjustable motor bases, rails, and frames for equipment mounting.
3. Design Calculations: Calculate requirements for selecting vibration isolators and seismic restraints and for designing vibration isolation bases.

1.5 INFORMATIONAL SUBMITTALS

A. Coordination Drawings: Plans, elevations, and other details, drawn to scale, on which the following items are shown and coordinated with each other, using input from Installers of the items involved:

1. Suspended ceiling components.
2. Structural members to which equipment or suspension systems will be attached.

B. Seismic Qualification Certificates: For air-to-air energy recovery equipment, accessories, and components, from manufacturer.

1. Basis for Certification: Indicate whether withstand certification is based on actual test of assembled components or on calculation.
2. Dimensioned Outline Drawings of Equipment Unit: Identify center of gravity and locate and describe mounting and anchorage provisions.
3. Detailed description of equipment anchorage devices on which the certification is based and their installation requirements.

C. Field quality-control reports.

1.6 CLOSEOUT SUBMITTALS

A. Operation and Maintenance Data: For air-to-air energy recovery equipment to include in maintenance manuals.

1.7 MAINTENANCE MATERIAL SUBMITTALS

A. Furnish extra materials that match products installed and that are packaged with protective covering for storage and identified with labels describing contents.

1. Filters: One set(s) of each type of filter specified.
2. Fan Belts: One set(s) of belts for each belt-driven fan in energy recovery units.
3. Wheel Belts: One set(s) of belts for each heat wheel.

1.8 QUALITY ASSURANCE

A. Electrical Components, Devices, and Accessories: Listed and labeled as defined in NFPA 70, by a qualified testing agency, and marked for intended location and application.

B. ARI Compliance:

Copyright 2013 AIA MasterSpec Premium

1. Capacity ratings for air-to-air energy recovery equipment shall comply with ARI 1060, "Performance Rating of Air-to-Air Heat Exchangers for Energy Recovery Ventilation Equipment."

C. ASHRAE Compliance:

1. Applicable requirements in ASHRAE 62.1, Section 5 - "Systems and Equipment" and Section 7 - "Construction and Startup."
2. Capacity ratings for air-to-air energy recovery equipment shall comply with ASHRAE 84, "Method of Testing Air-to-Air Heat Exchangers."

D. UL Compliance:

1. Packaged heat recovery ventilators shall comply with requirements in UL 1812, "Ducted Heat Recovery Ventilators"; or UL 1815, "Nonducted Heat Recovery Ventilators."
2. Electric coils shall comply with requirements in UL 1995, "Heating and Cooling Equipment."

1.9 COORDINATION

A. Coordinate layout and installation of air-to-air energy recovery equipment and suspension system with other construction that penetrates ceilings or is supported by them, including light fixtures, HVAC equipment, fire-suppression system, and partition assemblies.

B. Coordinate sizes and locations of concrete bases with actual equipment provided.

C. Coordinate sizes and locations of roof curbs, equipment supports, and roof penetrations with actual equipment provided.

1.10 WARRANTY

A. Special Warranty: Manufacturer's standard form in which manufacturer agrees to repair or replace components of air-to-air energy recovery equipment that fail in materials or workmanship within specified warranty period.

1. Warranty Period for total heat exchanger 1 year.
2. Warranty Period for Energy Transfer Core for Total Heat Exchanger 10 years.

PART 2 - PRODUCTS

2.1 FIXED-PLATE TOTAL HEAT EXCHANGERS

A. Casing: Galvanized steel.

B. Plates: Evenly spaced and sealed and arranged for counter airflow.

1. Plate Material: Chemically treated paper with selective hydroscopicity and moisture permeability, and gas barrier properties.

Copyright 2013 AIA MasterSpec Premium

C. Bypass Plenum: Within casing, with gasketed face-and-bypass dampers having operating rods extended outside casing.

D. Blowers:
1. The unit shall be furnished with two direct drive centrifugal blowers running simultaneously supplying and extracting air at the same rate for balanced ventilation airflow.
2. The blower motor shall be directly connected to the blower wheels and have permanently lubricated bearings.
3. The blowers and motors shall be mounted for quiet operation.

E. Disposable Panel Filters:

1. Comply with NFPA 90A.
2. Filter Holding Frames: Arranged for flat or angular orientation, with access doors on both sides of unit. Filters shall be removable from one side or lift out from access plenum.
3. Factory-fabricated, viscous-coated, flat-panel type.
4. Thickness: 1 inch.
5. Minimum Arrestance: 80, according to ASHRAE 52.1.
6. MERV: 5, according to ASHRAE 52.2.
7. Media: Interlaced glass fibers sprayed with nonflammable adhesive.
8. Frame: Galvanized steel with metal grid on outlet side, steel rod grid on inlet side, hinged, and with pull and retaining handles.

F. Extended-Surface, Disposable Panel Filters:

1. Comply with NFPA 90A.
2. Filter Holding Frames: Arranged for flat or angular orientation, with access doors on both sides of unit. Filters shall be removable from one side or lift out from access plenum.
3. Factory-fabricated, dry, extended-surface type.
4. Thickness: 1 inch.
5. Minimum Arrestance: 90, according to ASHRAE 52.1.
6. MERV: 7, according to ASHRAE 52.2.
7. Media: Fibrous material formed into deep-V-shaped pleats and held by self-supporting wire grid.
8. Media-Grid Frame: Nonflammable cardboard.
9. Mounting Frames: Welded, galvanized steel with gaskets and fasteners, suitable for bolting together into built-up filter banks.

2.2 CONTROLS

A. ERV shall run continuously during normal occupied hours (Adjustable).

B. The ERV unit is interlocked with (outdoor) indoor units with non polar shielded, jacketed control wire.

Copyright 2013 AIA MasterSpec Premium

PART 3 - EXECUTION

3.1 EXAMINATION

A. Examine areas and conditions, with Installer present, for compliance with requirements for installation tolerances and other conditions affecting performance of the Work.

B. Examine casing insulation materials and filter media before air-to-air energy recovery equipment installation. Reject insulation materials and filter media that are wet, moisture damaged, or mold damaged.

C. Examine roughing-in for electrical services to verify actual locations of connections before installation.

D. Proceed with installation only after unsatisfactory conditions have been corrected.

3.2 INSTALLATION

A. Install heat wheels so supply and exhaust airstreams flow in opposite directions and rotation is away from exhaust side to purge section to supply side.

1. Install access doors in both supply and exhaust ducts, both upstream and downstream, for access to wheel surfaces, drive motor, and seals.
2. Install removable panels or access doors between supply and exhaust ducts on building side for bypass during startup.

B. Install fixed-plate heat exchangers so supply and exhaust airstreams flow in opposite directions.

C. Suspended Units: Suspend and brace units from structural-steel support frame using threaded steel rods and spring hangers. Comply with requirements for vibration isolation devices specified in Section 230548 "Vibration and Seismic Controls for HVAC."

D. Install units with clearances for service and maintenance.

E. Install new filters at completion of equipment installation and before testing, adjusting, and balancing.

3.3 FIELD QUALITY CONTROL

A. Manufacturer's Field Service: Engage a factory-authorized service representative to inspect, test, and adjust components, assemblies, and equipment installations, including connections.

B. Perform tests and inspections.

1. Manufacturer's Field Service: Engage a factory-authorized service representative to inspect components, assemblies, and equipment installations, including connections, and to assist in testing.

C. Tests and Inspections:

Copyright 2013 AIA MasterSpec Premium

1. Operational Test: After electrical circuitry has been energized, start units to confirm proper motor rotation and unit operation.
2. Adjust seals and purge.
3. Test and adjust controls and safeties. Replace damaged and malfunctioning controls and equipment.
4. Set initial temperature and humidity set points.
5. Set field-adjustable switches and circuit-breaker trip ranges as indicated.

D. Air-to-air energy recovery equipment will be considered defective if it does not pass tests and inspections.

E. Prepare test and inspection reports.

3.4 DEMONSTRATION

A. Engage a factory-authorized service representative to train Owner's maintenance personnel to adjust, operate, and maintain air-to-air energy recovery units.

END OF SECTION 237200

SECTION 238126 - SPLIT-SYSTEM AIR-CONDITIONERS

PART 1 - GENERAL

1.1 RELATED DOCUMENTS

A. Drawings and general provisions of the Contract, including General and Supplementary Conditions and Division 01 Specification Sections, apply to this Section.

1.2 SUMMARY

A. Section includes split-system air-conditioning and heat-pump units consisting of separate evaporator-fan and compressor-condenser components.

1.3 ACTION SUBMITTALS

A. Product Data: For each type of product indicated. Include rated capacities, operating characteristics, and furnished specialties and accessories. Include performance data in terms of capacities, outlet velocities, static pressures, sound power characteristics, motor requirements, and electrical characteristics.

B. Shop Drawings: Include plans, elevations, sections, details, and attachments to other work.

1. Detail equipment assemblies and indicate dimensions, weights, loads, required clearances, method of field assembly, components, and location and size of each field connection.
2. Wiring Diagrams: For power, signal, and control wiring.

C. Samples for Initial Selection: For units with factory-applied color finishes.

1.4 INFORMATIONAL SUBMITTALS

A. Field quality-control reports.

B. Warranty: Sample of special warranty.

1.5 CLOSEOUT SUBMITTALS

A. Operation and Maintenance Data: For split-system air-conditioning units to include in emergency, operation, and maintenance manuals.

1.6 MAINTENANCE MATERIAL SUBMITTALS

A. Furnish extra materials that match products installed and that are packaged with protective covering for storage and identified with labels describing contents.

1. Filters: two set(s) for each air-handling unit.

1.7 QUALITY ASSURANCE

A. Electrical Components, Devices, and Accessories: Listed and labeled as defined in NFPA 70, by a qualified testing agency, and marked for intended location and application.

B. ASHRAE Compliance:

1. Fabricate and label refrigeration system to comply with ASHRAE 15, "Safety Standard for Refrigeration Systems."
2. ASHRAE Compliance: Applicable requirements in ASHRAE 62.1, Section 4 - "Outdoor Air Quality," Section 5 - "Systems and Equipment," Section 6 - " Procedures," and Section 7 - "Construction and System Start-up."

C. ASHRAE/IESNA Compliance: Applicable requirements in ASHRAE/IESNA 90.1.

1.8 COORDINATION

A. Coordinate sizes and locations of PVC/Rubber equipment bases with actual equipment provided. Cast anchor-bolt inserts into bases.

1.9 WARRANTY

A. Special Warranty: Manufacturer's standard form in which manufacturer agrees to repair or replace components of split-system air-conditioning units that fails in materials or workmanship within specified warranty period.

1. Warranty Period:

a. For Compressor: seven year(s) from date of Substantial Completion.
b. For Parts: five, year(s) from date of Substantial Completion.
c. For Labor: One, year(s) from date of Substantial Completion.

PART 2 - PRODUCTS

2.1 MANUFACTURERS

A. Mitsubishi Electric

2.2 INDOOR UNITS (5 TONS OR LESS)

A. Concealed Evaporator-Fan Components:

1. The four-way cassette style indoor unit that recesses into the ceiling with a ceiling grille. The indoor unit shall be factory assembled, wired and run tested. Contained within the unit shall be all factory wiring, piping, electronic modulating linear expansion device, control circuit board and fan motor. The unit shall have a self-diagnostic function, 3-minute time delay mechanism, an auto restart function, an emergency operation function and a test run switch. Indoor unit and refrigerant pipes shall be charged with dehydrated air before shipment from the factory.

2. Unit Cabinet: The cabinet shall be a compact so it will fit within a standard 24” square suspended ceiling grid. Four-way grille shall be fixed to bottom of cabinet allowing two, three or four-way blow.

3. Chassis: Galvanized steel with flanged edges, removable panels for servicing, and insulation on back of panel.
4. Refrigerant Coil: Copper tube, with mechanically bonded aluminum fins and thermal-expansion valve. Comply with ARI 206/110.
5. Fan: Forward-curved directly direct driven by single motor.
6. Fan Motors:

   a. Comply with NEMA designation, temperature rating, service factor, enclosure type, and efficiency requirements specified in Section 230513 "Common Motor Requirements for HVAC Equipment."
   b. Multitapped, multispeed with internal thermal protection and permanent lubrication.
   c. The indoor fan shall consist of three (3) speeds, Low, Mid, and High.
   d. The indoor unit shall have an adjustable air outlet system offering 4-way airflow, 3-way airflow, or 2-way airflow.
   e. Wiring Terminations: Connect motor to chassis wiring with plug connection.

7. Airstream Surfaces: Surfaces in contact with the airstream shall comply with requirements in ASHRAE 62.1.

8. Filters: Return air shall be filtered by means of a long life washable return air filter with a minimum MERV rating of 8.0.

9. Condensate Drain Pans:

   a. Provide condensate pan and drain under the cooling coil.
   b. Drain Connection: Located at lowest point of pan and sized to prevent overflow. Terminate with threaded nipple on one end or both ends of pan.

      1) Minimum Connection Size: NPS 1 1/4.

2.3 OUTDOOR UNITS (5 TONS OR LESS)

A. Air-Cooled, Compressor-Condenser Components:

1. Casing: Galvanized Steel, finished with baked enamel in color selected by Architect, with removable panels for access to controls, weep holes for water drainage, and mounting holes in base. Provide brass service valves, fittings, and gage ports on exterior of casing.
2. Compressor: Hermetically sealed with crankcase heater and mounted on vibration isolation device. Compressor motor shall have thermal- and current-sensitive overload devices, start capacitor, relay, and contactor.

    a. Compressor Type: DC Inverted driven, Variable Speed Twin Rotatory with a factory supplied and installed inverter drive package.
    b. Refrigerant Charge: R-410A.
    c. Refrigerant Coil: Copper tube, with mechanically bonded aluminum fins and liquid subcooler. Comply with ARI 206/110.

3. Heat-Pump Components: Reversing valve and low-temperature-air cutoff thermostat.
4. Fan: Direct drive propeller type directly connected to motor.
5. Motor: Variable Speed, Permanently lubricated, with integral thermal-overload protection.
6. Low Ambient Kit: Permits operation down to 45 deg F.
7. Mounting Base: Polyethylene.

2.4 ACCESSORIES

A. For each indoor unit, provide a 7-day 24 hour programmable thermostat and programmable application specific controller (ASC).

B. Mitsubishi model MAC-333 or equal, including the following that provide required capabilities/features:

1. Local and remote system stop-start.

2. Capable of being connected to “Cloud” in future for remote status and system control.

3. Fan speed selection including auto setting.

4. Liquid-crystal display indicating temperature, set-point temperature, time setting, operating mode and fan speed.

5. Appropriate relays that allow for remote on/off control of indoor unit.

6. Two outputs capable of providing equipment Status and Error state.

7. Each ASC shall be capable of communicating with other ASC’s on network. It shall use non-volatile memory and maintain all programming information in event of power loss.

C. Thermostat: Low voltage with subbase to control compressor and evaporator fan.

D. Automatic-reset timer to prevent rapid cycling of compressor.

E. Refrigerant Line Kits: Soft-annealed copper suction and liquid lines factory cleaned, dried, pressurized, and sealed; factory-insulated suction line with flared fittings at both ends and ball valves.

F. Drain Hose: For condensate.

G. Thermostat: Wireless infrared functioning to remotely control compressor and evaporator fan, with the following features:

1. Compressor time delay.
2. 24-hour time control of system stop and start.
3. Liquid-crystal display indicating temperature, set-point temperature, time setting, operating mode, and fan speed.
4. Fan-speed selection including auto setting.

H. Additional Monitoring:
1. Monitor variable-frequency-drive operation.
2. Monitor cooling load.
3. Provide cooling oil drain pan level sensor that shuts down indoor unit upon detecting condensate overflow.

PART 3 - EXECUTION

3.1 INSTALLATION

A. Install units’ level and plumb.

B. Install evaporator-fan components using manufacturer's standard mounting devices securely fastened to building structure.

C. Install roof-mounted, compressor-condenser components on equipment supports specified in Section 077200 "Roof Accessories." Anchor units to supports with removable, cadmium-plated fasteners.

D. Equipment Mounting:
1. Install ground-mounted, compressor-condenser components on polyethylene mounting base.
2. Comply with requirements for vibration isolation devices specified in Section 230548.13 "Vibration Controls for HVAC."

E. Install and connect precharged refrigerant tubing to component's quick-connect fittings. Install tubing to allow access to unit.

3.2 CONNECTIONS

A. Piping installation requirements are specified in other Sections. Drawings indicate general arrangement of piping, fittings, and specialties.

B. Duct Connections: Duct installation requirements are specified in Section 233113 "Metal Ducts." Drawings indicate the general arrangement of ducts. Connect supply ducts to split-system air-conditioning units with flexible duct connectors. Flexible duct connectors are specified in Section 233300 "Air Duct Accessories.

3.3 FIELD QUALITY CONTROL

A. Tests and Inspections:

1. Leak Test: After installation, charge system and test for leaks. Repair leaks and retest until no leaks exist.
2. Operational Test: After electrical circuitry has been energized, start units to confirm proper motor rotation and unit operation.
3. Test and adjust controls and safeties. Replace damaged and malfunctioning controls and equipment.

B. Remove and replace malfunctioning units and retest as specified above.

C. Prepare test and inspection reports.

3.4 STARTUP SERVICE

A. Perform startup service.

1. Complete installation and startup checks according to manufacturer's written instructions.

3.5 DEMONSTRATION

A. Train Owner's maintenance personnel to adjust, operate, and maintain units.

END OF SECTION 238126

Copyright 2013 AIA MasterSpec Premium

SECTION 238239.13 - CABINET UNIT HEATERS

PART 1 - GENERAL

1.1 RELATED DOCUMENTS

A. Drawings and general provisions of the Contract, including General and Supplementary Conditions and Division 01 Specification Sections, apply to this Section.

1.2 SUMMARY

A. Section includes cabinet unit heaters with centrifugal fans and electric-resistance heating coils.

1.3 DEFINITIONS

A. CWP: Cold working pressure.

B. DDC: Direct digital control.

C. PTFE: Polytetrafluoroethylene plastic.

D. TFE: Tetrafluoroethylene plastic.

1.4 ACTION SUBMITTALS

A. Product Data: For each type of product.

1. Include rated capacities, operating characteristics, furnished specialties, and accessories.

B. Shop Drawings:

1. Include plans, elevations, sections, and details.
2. Include details of equipment assemblies. Indicate dimensions, weights, loads, required clearances, method of field assembly, components, and location and size of each field connection.
3. Include location and size of each field connection.
4. Include details of anchorages and attachments to structure and to supported equipment.
5. Include equipment schedules to indicate rated capacities, operating characteristics, furnished specialties, and accessories.
6. Indicate location and arrangement of piping valves and specialties.
7. Indicate location and arrangement of integral controls.
8. Wiring Diagrams: Power, signal, and control wiring.

C. Samples: For each exposed product and for each color and texture specified.

D. Samples for Initial Selection: Finish colors for units with factory-applied color finishes.

Copyright 2013 AIA MasterSpec Premium

E. Samples for Verification: Finish colors for each type of cabinet unit heater indicated with factory-applied color finishes.

1.5 INFORMATIONAL SUBMITTALS

A. Coordination Drawings: Floor plans, reflected ceiling plans, and other details, drawn to scale, on which the following items are shown and coordinated with each other, using input from installers of the items involved:

1. Suspended ceiling components.
2. Structural members to which cabinet unit heaters will be attached.
3. Method of attaching hangers to building structure.
4. Size and location of initial access modules for acoustical tile.
5. Items penetrating finished ceiling, including the following:

   a. Lighting fixtures.
   b. Air outlets and inlets.
   c. Speakers.
   d. Sprinklers.
   e. Access panels.

6. Perimeter moldings for exposed or partially exposed cabinets.

B. Seismic Qualification Certificates: Submit certification that cabinet unit heaters, accessories, and components will withstand seismic forces defined in Section 230548 "Vibration and Seismic Controls for HVAC." Include the following:

1. Basis for Certification: Indicate whether withstand certification is based on actual test of assembled components or on calculation.
2. Dimensioned Outline Drawings of Equipment Unit: Identify center of gravity and locate and describe mounting and anchorage provisions.
3. Include detailed description of equipment anchorage devices on which the certification is based and their installation requirements.

C. Field quality-control reports.

1.6 CLOSEOUT SUBMITTALS

A. Operation and Maintenance Data: For cabinet unit heaters to include in emergency, operation, and maintenance manuals.

1.7 MAINTENANCE MATERIAL SUBMITTALS

A. Furnish extra materials described below that match products installed and that are packaged with protective covering for storage and identified with labels describing contents.

1. Cabinet Unit-Heater Filters: Furnish one spare filter(s) for each filter installed.

Copyright 2013 AIA MasterSpec Premium

PART 2 - PRODUCTS

2.1 MANUFACTURERS

2.2 DESCRIPTION

A. Factory-assembled and -tested unit complying with AHRI 440.

B. Electrical Components, Devices, and Accessories: Listed and labeled as defined in NFPA 70, by a qualified testing agency, and marked for intended location and application.

C. Comply with UL 2021.

2.3 PERFORMANCE REQUIREMENTS

A. ASHRAE Compliance: Applicable requirements in ASHRAE 62.1, Section 5 - "Systems and Equipment" and Section 7 - "Construction and Startup."

B. ASHRAE/IESNA 90.1 Compliance: Applicable requirements in ASHRAE/IESNA 90.1, Section 6 - "Heating, Ventilating, and Air-Conditioning."

C. Seismic Performance: Cabinet unit heaters shall withstand the effects of earthquake motions determined according to ASCE/SEI 7.

1. The term "withstand" means "the unit will remain in place without separation of any parts when subjected to the seismic forces specified.

2.4 CABINETS

A. Material: Steel with baked-enamel finish with manufacturer's standard paint, in color selected by Architect.

1. Vertical Unit, Exposed Front Panels: Minimum 0.0528-inch- or 0.0677-inch- thick galvanized sheet steel, removable panels with channel-formed edges secured with tamperproof cam fasteners.
2. Horizontal Unit, Exposed Bottom Panels: Minimum 0.0528-inch- or 0.0677-inch- thick galvanized sheet steel, removable panels secured with tamperproof cam fasteners and safety chain.
3. Recessed Flanges: Steel, finished to match cabinet.
4. Control Access Door: Key operated.
5. Base: Minimum 0.0528-inch- thick steel, finished to match cabinet, 4 inches high with leveling bolts.
6. False Back: Minimum 0.0428-inch- thick steel, finished to match cabinet.

Copyright 2013 AIA MasterSpec Premium

2.5 FILTERS

A. Minimum Arrestance: According to ASHRAE 52.1 and a minimum efficiency reporting value (MERV) according to ASHRAE 52.2.

1. Washable Foam: 70 percent arrestance and MERV 3.
2. Glass Fiber Treated with Adhesive: 80 percent arrestance and MERV 5.
3. Pleated: 90 percent arrestance and MERV 7.

2.6 COILS

A. Electric-Resistance Heating Coil: Nickel-chromium heating wire, free from expansion noise and hum, mounted in ceramic inserts in galvanized-steel housing; with fuses in terminal box for overcurrent protection and limit controls for high-temperature protection. Terminate elements in stainless-steel machine-staked terminals secured with stainless-steel hardware.

2.7 CONTROLS

A. Fan and Motor Board: Removable.

1. Fan: Forward curved, double width, centrifugal, directly connected to motor; thermoplastic or painted-steel wheels and aluminum, painted-steel, or galvanized-steel fan scrolls.
2. Motor: Permanently lubricated, multispeed; resiliently mounted on motor board. Comply with requirements in Section 230513 "Common Motor Requirements for HVAC Equipment."
3. Wiring Terminations: Connect motor to chassis wiring with plug connection.

B. Control devices and operational sequences are specified in Section 230923 "Direct Digital Control (DDC) System for HVAC".

C. Basic Unit Controls:

1. Control voltage transformer.
2. Unit-mounted thermostat with the following features:

   a. Heat-off switch.
   b. Fan on-auto switch.
   c. Manual fan-speed switch.
   d. Adjustable deadband.
   e. Concealed set point.
   f. Concealed indication.
   g. Deg F indication.

3. Unit-mounted temperature sensor.
4. Unoccupied period override push button.
5. Data entry and access port.

   a. Input data includes room temperature and occupied and unoccupied periods.

Copyright 2013 AIA MasterSpec Premium

b. Output data includes room temperature, supply-air temperature, entering-water temperature, operating mode, and status.

D. Terminal Controller:

1. Scheduled Operation: Occupied and unoccupied periods on seven-day clock with a minimum of four programmable periods per day.
2. Unoccupied Period Override: Two hours.
3. Unit Supply-Air Fan Operations:

a. Occupied Periods: Fan runs continuously.
b. Unoccupied Periods: Fan cycles to maintain setback room temperature.

4. Heating-Coil Operations:

a. Occupied Periods: Energize electric-resistance coil to provide heating if room temperature falls below thermostat set point.
b. Unoccupied Periods: Start fan and energize electric-resistance coil if room temperature falls below setback temperature.

5. Controller shall have volatile-memory backup.

E. Electrical Connection: Factory-wired motors and controls for a single field connection.

2.8 CAPACITIES AND CHARACTERISTICS (REFER TO SCHEDULE)

PART 3 - EXECUTION

3.1 EXAMINATION

A. Examine areas to receive cabinet unit heaters for compliance with requirements for installation tolerances and other conditions affecting performance of the Work.

B. Examine roughing-in for electrical connections to verify actual locations before unit-heater installation.

C. Proceed with installation only after unsatisfactory conditions have been corrected.

3.2 INSTALLATION

A. Install wall boxes in finished wall assembly; seal and weatherproof. Joint-sealant materials and applications are specified in Section 079200 "Joint Sealants."

B. Install cabinet unit heaters to comply with NFPA 90A.

C. Install wall-mounted thermostats and switch controls in electrical outlet boxes at heights to match lighting controls. Verify location of thermostats and other exposed control sensors with Drawings and room details before installation.

Copyright 2013 AIA MasterSpec Premium

D. Install new filters in each fan-coil unit within two weeks of Substantial Completion.

3.3 CONNECTIONS

A. Comply with safety requirements in UL 1995.

B. Ground equipment according to Section 260526 "Grounding and Bonding for Electrical Systems."

C. Connect wiring according to Section 260519 "Low-Voltage Electrical Power Conductors and Cables."

3.4 FIELD QUALITY CONTROL

A. Perform the following tests and inspections:

1. Operational Test: After electrical circuitry has been energized, start units to confirm proper motor rotation and unit operation.
2. Operate electric heating elements through each stage to verify proper operation and electrical connections.
3. Test and adjust controls and safety devices. Replace damaged and malfunctioning controls and equipment.

B. Units will be considered defective if they do not pass tests and inspections.

C. Prepare test and inspection reports.

3.5 ADJUSTING

A. Adjust initial temperature set points.

B. Occupancy Adjustments: When requested within 12 months of date of Substantial Completion, provide on-site assistance in adjusting system to suit actual occupied conditions. Provide up to two visits to Project during other-than-normal occupancy hours for this purpose.

3.6 DEMONSTRATION

A. Engage a factory-authorized service representative to train Owner's maintenance personnel to adjust, operate, and maintain cabinet unit heaters.

END OF SECTION 238239.13

SECTION 230513 - COMMON MOTOR REQUIREMENTS FOR HVAC EQUIPMENT

PART 1 - GENERAL

1.1 RELATED DOCUMENTS

A. Drawings and general provisions of the Contract, including General and Supplementary Conditions and Division 01 Specification Sections, apply to this Section.

1.2 SUMMARY

A. Section includes general requirements for single-phase and polyphase, general-purpose, horizontal, small and medium, squirrel-cage induction motors for use on ac power systems up to 600 V and installed at equipment manufacturer's factory or shipped separately by equipment manufacturer for field installation.

1.3 COORDINATION

A. Coordinate features of motors, installed units, and accessory devices to be compatible with the following:

1. Motor controllers.
2. Torque, speed, and horsepower requirements of the load.
3. Ratings and characteristics of supply circuit and required control sequence.
4. Ambient and environmental conditions of installation location.

PART 2 - PRODUCTS

2.1 GENERAL MOTOR REQUIREMENTS

A. Comply with NEMA MG 1 unless otherwise indicated.

B. Comply with IEEE 841 for severe-duty motors.

2.2 MOTOR CHARACTERISTICS

A. Duty: Continuous duty at ambient temperature of 40 deg C and at altitude of 3300 feet above sea level.

B. Capacity and Torque Characteristics: Sufficient to start, accelerate, and operate connected loads at designated speeds, at installed altitude and environment, with indicated operating sequence, and without exceeding nameplate ratings or considering service factor.

Copyright 2011 AIA MasterSpec Premium

2.3 POLYPHASE MOTORS

A. Description: NEMA MG 1, Design B, medium induction motor.

B. Efficiency: Energy efficient, as defined in NEMA MG 1.

C. Service Factor: 1.15.

D. Multispeed Motors: Variable torque.

1. For motors with 2:1 speed ratio, consequent pole, single winding.
2. For motors with other than 2:1 speed ratio, separate winding for each speed.

E. Multispeed Motors: Separate winding for each speed.

F. Rotor: Random-wound, squirrel cage.

G. Bearings: Regreasable, shielded, antifriction ball bearings suitable for radial and thrust loading.

H. Temperature Rise: Match insulation rating.

I. Insulation: Class F

J. Code Letter Designation:

1. Motors **15**HP and Larger: NEMA starting Code F or Code G.
2. Motors Smaller than 15r HP: Manufacturer's standard starting characteristic.

K. Enclosure Material: Cast iron for motor frame sizes 324Tand larger; rolled steel for motor frame sizes smaller than 324T

2.4 POLYPHASE MOTORS WITH ADDITIONAL REQUIREMENTS

A. Motors Used with Reduced-Voltage and Multispeed Controllers: Match wiring connection requirements for controller with required motor leads. Provide terminals in motor terminal box, suited to control method.

B. Motors Used with Variable Frequency Controllers: Ratings, characteristics, and features coordinated with and approved by controller manufacturer.

1. Windings: Copper magnet wire with moisture-resistant insulation varnish, designed and tested to resist transient spikes, high frequencies, and short time rise pulses produced by pulse-width modulated inverters.
2. Energy- and Premium-Efficient Motors: Class B temperature rise; Class F insulation.
3. Inverter-Duty Motors: Class F temperature rise; Class H insulation.
4. Thermal Protection: Comply with NEMA MG 1 requirements for thermally protected motors.

C. Severe-Duty Motors: Comply with IEEE 841, with 1.15 minimum service factor.

Copyright 2011 AIA MasterSpec Premium

2.5 SINGLE-PHASE MOTORS

A. Motors larger than 1/20 hp shall be one of the following, to suit starting torque and requirements of specific motor application:

1. Permanent-split capacitor.
2. Split phase.
3. Capacitor start, inductor run.
4. Capacitor start, capacitor run.

B. Multispeed Motors: Variable-torque, permanent-split-capacitor type.

C. Bearings: Prelubricated, antifriction ball bearings or sleeve bearings suitable for radial and thrust loading.

D. Motors 1/20 HP and Smaller: Shaded-pole type.

E. Thermal Protection: Internal protection to automatically open power supply circuit to motor when winding temperature exceeds a safe value calibrated to temperature rating of motor insulation. Thermal-protection device shall automatically reset when motor temperature returns to normal range.

PART 3 - EXECUTION (Not Applicable)

END OF SECTION 230513

Copyright 2014 AIA MasterSpec Premium

SECTION 260519 - LOW-VOLTAGE ELECTRICAL POWER CONDUCTORS AND CABLES

PART 1 - GENERAL

1.1 RELATED DOCUMENTS

A. Drawings and general provisions of the Contract, including General and Supplementary Conditions and Division 01 Specification Sections, apply to this Section.

1.2 SUMMARY

A. Section Includes:

1. Building wires and cables rated 2000 V and less.
2. Connectors, splices, and terminations rated 2000 V and less.

B. Related Requirements:
1. Section 271500 "Communications Horizontal Cabling" for cabling used for voice and data circuits.

1.3 DEFINITIONS

A. VFC: Variable-frequency controller.

1.4 ACTION SUBMITTALS

A. Product Data: For each type of product.

B. Product Schedule: Indicate type, use, location, and termination locations.

C. Sustainable Design Submittals:

1.5 INFORMATIONAL SUBMITTALS

A. Qualification Data: For testing agency.

B. Field quality-control reports.

1.6 QUALITY ASSURANCE

A. Testing Agency Qualifications: Member company of NETA.

1. Testing Agency's Field Supervisor: Certified by NETA to supervise on-site testing.

Copyright 2014 AIA MasterSpec Premium

PART 2 - PRODUCTS

2.1 CONDUCTORS AND CABLES

A. Electrical Components, Devices, and Accessories: Listed and labeled as defined in NFPA 70, by a qualified testing agency, and marked for intended location and application.

B. Conductor and Cable Marking: Comply with wire and cable marking according to UL's "Wire and Cable Marking and Application Guide."

C. Comply with UL 1277, UL 1685, and NFPA 70 for Type TC-ER cable used in VFC circuits.

D. Conductors: Copper, complying with NEMA WC 70/ICEA S-95-658.
   1. Conductor Insulation: Comply with NEMA WC 70/ICEA S-95-658 for Type THHN/THWN-2.

E. Cable: Comply with NEMA WC 70/ICEA S-95-658 for metal-clad cable, Type MC with ground wire.

   1. VFC Cable: Type TC-ER with oversized crosslinked polyethylene insulation, spiral-wrapped foil plus 85 percent coverage braided shields and insulated full-size ground wire, and sunlight- and oil-resistant outer PVC jacket.

2.2 CONNECTORS AND SPLICES

A. Description: Factory-fabricated connectors and splices of size, ampacity rating, material, type, and class for application and service indicated; listed and labeled as defined in NFPA 70, by a qualified testing agency, and marked for intended location and application.

PART 3 - EXECUTION

3.1 CONDUCTOR MATERIAL APPLICATIONS

A. Feeders: Copper; solid for No. 10 AWG and smaller; stranded for No. 8 AWG and larger.

B. Feeders: Copper for feeders smaller than No. 4 AWG; copper for feeders No. 4 AWG and larger. Conductors shall be solid for No. 10 AWG and smaller; stranded for No. 8 AWG and larger.

C. Branch Circuits: Copper. Solid for No. 10 AWG and smaller; stranded for No. 8 AWG and larger.

D. Branch Circuits: Copper. Solid for No. 12 AWG and smaller; stranded for No. 10 AWG and larger.

E. VFC Output Circuits Cable: Extra-flexible stranded for all sizes.

Copyright 2014 AIA MasterSpec Premium

3.2 CONDUCTOR INSULATION AND MULTICONDUCTOR CABLE APPLICATIONS AND WIRING METHODS

A. Service Entrance: Type THHN/THWN-2, single conductors in raceway Type XHHW-2, single conductors in raceway.

B. Exposed Feeders: Type THHN/THWN-2, single conductors in raceway Type XHHW-2, single conductors in raceway, Metal-clad cable, Type MC.

C. Feeders Concealed in Ceilings, Walls, Partitions, and Crawlspaces: Type THHN/THWN-2, single conductors in raceway, Metal-clad cable, Type MC.

D. Exposed Branch Circuits, Including in Crawlspaces: Type THHN/THWN-2, single conductors in raceway, Metal-clad cable, Type MC.

E. Branch Circuits Concealed in Ceilings, Walls, and Partitions: Type THHN/THWN-2, single conductors in raceway, Metal-clad cable, Type MC.

F. Cord Drops and Portable Appliance Connections: Type SO, hard service cord with stainless-steel, wire-mesh, strain relief device at terminations to suit application.

G. VFC Output Circuits: Type XHHW-2 in metal conduit.

3.3 INSTALLATION OF CONDUCTORS AND CABLES

A. Conceal cables in finished walls, ceilings, and floors unless otherwise indicated.

B. Complete raceway installation between conductor and cable termination points according to Section 260533 "Raceways and Boxes for Electrical Systems" prior to pulling conductors and cables.

C. Use manufacturer-approved pulling compound or lubricant where necessary; compound used must not deteriorate conductor or insulation. Do not exceed manufacturer's recommended maximum pulling tensions and sidewall pressure values.

D. Use pulling means, including fish tape, cable, rope, and basket-weave wire/cable grips, that will not damage cables or raceway.

E. Install exposed cables parallel and perpendicular to surfaces of exposed structural members, and follow surface contours where possible.

F. Support cables according to Section 260529 "Hangers and Supports for Electrical Systems."

G. Complete cable tray systems installation according to Section 260536 "Cable Trays for Electrical Systems" prior to installing conductors and cables.

Copyright 2014 AIA MasterSpec Premium

3.4 CONNECTIONS

A. Tighten electrical connectors and terminals according to manufacturer's published torque-tightening values. If manufacturer's torque values are not indicated, use those specified in UL 486A-486B.

B. Make splices, terminations, and taps that are compatible with conductor material and that possess equivalent or better mechanical strength and insulation ratings than unspliced conductors.

1. Use oxide inhibitor in each splice, termination, and tap for aluminum conductors.

C. Wiring at Outlets: Install conductor at each outlet, with at least 12 inches (300 mm) of slack.

3.5 IDENTIFICATION

A. Identify and color-code conductors and cables according to Section 260553 "Identification for Electrical Systems."

B. Identify each spare conductor at each end with identity number and location of other end of conductor, and identify as spare conductor.

3.6 SLEEVE AND SLEEVE-SEAL INSTALLATION FOR ELECTRICAL PENETRATIONS

A. Install sleeves and sleeve seals at penetrations of exterior floor and wall assemblies.

3.7 FIRESTOPPING

A. Apply firestopping to electrical penetrations of fire-rated floor and wall assemblies to restore original fire-resistance rating of assembly.

3.8 FIELD QUALITY CONTROL

A. Testing Agency: Owner will engage a qualified testing agency to perform tests and inspections.

B. Manufacturer's Field Service: Engage a factory-authorized service representative to test and inspect components, assemblies, and equipment installations, including connections.

C. Perform the following tests and inspections:

1. After installing conductors and cables and before electrical circuitry has been energized, test conductors feeding the following critical equipment and services for compliance with requirements.

2. Perform each of the following visual and electrical tests:

a. Inspect exposed sections of conductor and cable for physical damage and correct connection according to the single-line diagram.

Copyright 2014 AIA MasterSpec Premium

b. Test bolted connections for high resistance using one of the following:

1) A low-resistance ohmmeter.
2) Calibrated torque wrench.
3) Thermographic survey.

c. Inspect compression applied connectors for correct cable match and indentation.
d. Inspect for correct identification.
e. Inspect cable jacket and condition.
f. Insulation-resistance test on each conductor with respect to ground and adjacent conductors. Apply a potential of 500-V dc for 300-V rated cable and 1000-V dc for 600-V rated cable for a one-minute duration.
g. Continuity test on each conductor and cable.
h. Uniform resistance of parallel conductors.

D. Cables will be considered defective if they do not pass tests and inspections.

E. Prepare test and inspection reports to record the following:

1. Procedures used.
2. Results that comply with requirements.
3. Results that do not comply with requirements and corrective action taken to achieve compliance with requirements.

END OF SECTION 260519

Copyright 2014 AIA MasterSpec Premium

SECTION 260526 - GROUNDING AND BONDING FOR ELECTRICAL SYSTEMS

PART 1 - GENERAL

1.1 RELATED DOCUMENTS

A. Drawings and general provisions of the Contract, including General and Supplementary Conditions and Division 01 Specification Sections, apply to this Section.

1.2 SUMMARY

A. Section includes grounding and bonding systems and equipment.

1.3 ACTION SUBMITTALS

A. Product Data: For each type of product indicated.

1.4 INFORMATIONAL SUBMITTALS

A. As-Built Data: Plans showing dimensioned as-built locations of grounding features specified in "Field Quality Control" Article, including the following:
   1. Grounding arrangements and connections for separately derived systems.

B. Qualification Data: For testing agency and testing agency's field supervisor.

C. Field quality-control reports.

1.5 CLOSEOUT SUBMITTALS

A. Operation and Maintenance Data: For grounding to include in emergency, operation, and maintenance manuals.

   1. In addition to items specified in Section 017823 "Operation and Maintenance Data," include the following:

      a. Instructions for periodic testing and inspection of grounding features at grounding connections for separately derived systems based on NFPA 70B.

         1) Tests shall determine if ground-resistance or impedance values remain within specified maximums, and instructions shall recommend corrective action if values do not.
         2) Include recommended testing intervals.

Copyright 2014 AIA MasterSpec Premium

1.6 QUALITY ASSURANCE

A. Testing Agency Qualifications: Member company of NETA or an NRTL.

1. Testing Agency's Field Supervisor: Certified by NETA to supervise on-site testing.

B. Electrical Components, Devices, and Accessories: Listed and labeled as defined in NFPA 70, by a qualified testing agency, and marked for intended location and application.

C. Comply with UL 467 for grounding and bonding materials and equipment.

PART 2 - PRODUCTS

2.1 MANUFACTURERS

2.2 SYSTEM DESCRIPTION

A. Electrical Components, Devices, and Accessories: Listed and labeled as defined in NFPA 70, by a qualified testing agency, and marked for intended location and application.

B. Comply with UL 467 for grounding and bonding materials and equipment.

2.3 CONDUCTORS

A. Insulated Conductors: Copper or tinned-copper wire or cable insulated for 600 V unless otherwise required by applicable Code or authorities having jurisdiction.

B. Bare Copper Conductors:

1. Solid Conductors: ASTM B 3.
2. Stranded Conductors: ASTM B 8.
3. Tinned Conductors: ASTM B 33.
4. Bonding Cable: 28 kcmil, 14 strands of No. 17 AWG conductor, 1/4 inch (6 mm) in diameter.
5. Bonding Conductor: No. 4 or No. 6 AWG, stranded conductor.

2.4 CONNECTORS

A. Listed and labeled by an NRTL acceptable to authorities having jurisdiction for applications in which used and for specific types, sizes, and combinations of conductors and other items connected.

B. Bolted Connectors for Conductors and Pipes: Copper or copper alloy.

C. Welded Connectors: Exothermic-welding kits of types recommended by kit manufacturer for materials being joined and installation conditions.

Copyright 2014 AIA MasterSpec Premium

D. Bus-Bar Connectors: Mechanical type, cast silicon bronze, solderless **compression**-type wire terminals, and long-barrel, two-bolt connection to ground bus bar.

PART 3 - EXECUTION

3.1 APPLICATIONS

A. Conductors: Install solid conductor for No. 8AWG and smaller, and stranded conductors for No. 6 AWG and larger unless otherwise indicated.

B. Isolated Grounding Conductors: Green-colored insulation with continuous yellow stripe. On feeders with isolated ground, identify grounding conductor where visible to normal inspection, with alternating bands of green and yellow tape, with at least three bands of green and two bands of yellow.

C. Conductor Terminations and Connections:

1. Pipe and Equipment Grounding Conductor Terminations: Bolted connectors.

3.2 GROUNDING AT THE SERVICE

A. Equipment grounding conductors and grounding electrode conductors shall be connected to the ground bus. Install a main bonding jumper between the neutral and ground buses.

3.3 GROUNDING SEPARATELY DERIVED SYSTEMS

A. Generator: Install grounding electrode(s) at the generator location. The electrode shall be connected to the equipment grounding conductor and to the frame of the generator.

3.4 EQUIPMENT GROUNDING

A. Install insulated equipment grounding conductors with all feeders and branch circuits.

B. Install insulated equipment grounding conductors with the following items, in addition to those required by NFPA 70:

1. Feeders and branch circuits.
2. Lighting circuits.
3. Receptacle circuits.
4. Single-phase motor and appliance branch circuits.
5. Three-phase motor and appliance branch circuits.
6. Flexible raceway runs.
7. Armored and metal-clad cable runs.

C. Air-Duct Equipment Circuits: Install insulated equipment grounding conductor to duct-mounted electrical devices operating at 120 V and more, including air cleaners, heaters, dampers,

Copyright 2014 AIA MasterSpec Premium

humidifiers, and other duct electrical equipment. Bond conductor to each unit and to air duct and connected metallic piping.

D. Water Heater, Heat-Tracing, and Antifrost Heating Cables: Install a separate insulated equipment grounding conductor to each electric water heater and heat-tracing cable. Bond conductor to heater units, piping, connected equipment, and components.

3.5 INSTALLATION

A. Grounding Conductors: Route along shortest and straightest paths possible unless otherwise indicated or required by Code. Avoid obstructing access or placing conductors where they may be subjected to strain, impact, or damage.

B. Ground Bonding Common with Lightning Protection System: Comply with NFPA 780 and UL 96 when interconnecting with lightning protection system. Bond electrical power system ground directly to lightning protection system grounding conductor at closest point to electrical service grounding electrode. Use bonding conductor sized same as system grounding electrode conductor, and install in conduit.

C. Bonding Straps and Jumpers: Install in locations accessible for inspection and maintenance except where routed through short lengths of conduit.

1. Bonding to Structure: Bond straps directly to basic structure, taking care not to penetrate any adjacent parts.
2. Bonding to Equipment Mounted on Vibration Isolation Hangers and Supports: Install bonding so vibration is not transmitted to rigidly mounted equipment.

D. Grounding and Bonding for Piping:

1. Metal Water Service Pipe: Install insulated copper grounding conductors, in conduit, from building's main service equipment, or grounding bus, to main metal water service entrances to building. Connect grounding conductors to main metal water service pipes; use a bolted clamp connector or bolt a lug-type connector to a pipe flange by using one of the lug bolts of the flange. Where a dielectric main water fitting is installed, connect grounding conductor on street side of fitting. Bond metal grounding conductor conduit or sleeve to conductor at each end.
2. Water Meter Piping: Use braided-type bonding jumpers to electrically bypass water meters. Connect to pipe with a bolted connector.
3. Bond each aboveground portion of gas piping system downstream from equipment shutoff valve.

E. Bonding Interior Metal Ducts: Bond metal air ducts to equipment grounding conductors of associated fans, blowers, electric heaters, and air cleaners. Install [**tinned** bonding jumper to bond across flexible duct connections to achieve continuity.

3.6 FIELD QUALITY CONTROL

A. Testing Agency: Owner will engage a qualified testing agency to perform tests and inspections.

Copyright 2014 AIA MasterSpec Premium

B. Manufacturer's Field Service: Engage a factory-authorized service representative to inspect, test, and adjust components, assemblies, and equipment installations, including connections.

C. Perform tests and inspections.

1. Manufacturer's Field Service: Engage a factory-authorized service representative to inspect components, assemblies, and equipment installations, including connections, and to assist in testing.

D. Tests and Inspections:

1. After installing grounding system but before permanent electrical circuits have been energized, test for compliance with requirements.
2. Inspect physical and mechanical condition. Verify tightness of accessible, bolted, electrical connections with a calibrated torque wrench according to manufacturer's written instructions.

3. Test completed grounding system at each location where a maximum ground-resistance level is specified, at service disconnect enclosure grounding terminal.

E. Grounding system will be considered defective if it does not pass tests and inspections.

F. Prepare test and inspection reports.

G. Report measured ground resistances that exceed the following values:

1. Power and Lighting Equipment or System with Capacity of 500 kVA and Less: 10 ohms.

H. Excessive Ground Resistance: If resistance to ground exceeds specified values, notify Architect promptly and include recommendations to reduce ground resistance.

END OF SECTION 260526

Copyright 2014 AIA MasterSpec Premium

SECTION 260533 - RACEWAYS AND BOXES FOR ELECTRICAL SYSTEMS

PART 1 - GENERAL

1.1 RELATED DOCUMENTS

A. Drawings and general provisions of the Contract, including General and Supplementary Conditions and Division 01 Specification Sections, apply to this Section.

1.2 SUMMARY

A. Section Includes:

1. Metal conduits, tubing, and fittings.
2. Nonmetal conduits, tubing, and fittings.
3. Metal wireways and auxiliary gutters.
4. Boxes, enclosures, and cabinets.

1.3 DEFINITIONS

A. GRC: Galvanized rigid steel conduit.

B. IMC: Intermediate metal conduit.

1.4 ACTION SUBMITTALS

A. Product Data: For surface raceways, wireways and fittings, floor boxes, hinged-cover enclosures, and cabinets.

B. Sustainable Design Submittals:

C. Shop Drawings: For custom enclosures and cabinets. Include plans, elevations, sections, and attachment details.

1.5 INFORMATIONAL SUBMITTALS

A. Coordination Drawings: Conduit routing plans, drawn to scale, on which the following items are shown and coordinated with each other, using input from installers of items involved:

1. Structural members in paths of conduit groups with common supports.
2. HVAC and plumbing items and architectural features in paths of conduit groups with common supports.

B. Qualification Data: For professional engineer.

Copyright 2014 AIA MasterSpec Premium

C. Seismic Qualification Certificates: For enclosures, cabinets, and conduit racks and their mounting provisions, including those for internal components, from manufacturer.

1. Basis for Certification: Indicate whether withstand certification is based on actual test of assembled components or on calculation.
2. Dimensioned Outline Drawings of Equipment Unit: Identify center of gravity and locate and describe mounting and anchorage provisions.
3. Detailed description of equipment anchorage devices on which the certification is based and their installation requirements.
4. Detailed description of conduit support devices and interconnections on which the certification is based and their installation requirements.

D. Source quality-control reports.

PART 2 - PRODUCTS

2.1 METAL CONDUITS, TUBING, AND FITTINGS

A. Listing and Labeling: Metal conduits, tubing, and fittings shall be listed and labeled as defined in NFPA 70, by a qualified testing agency, and marked for intended location and application.

B. GRC: Comply with ANSI C80.1 and UL 6.

C. IMC: Comply with ANSI C80.6 and UL 1242.

D. EMT: Comply with ANSI C80.3 and UL 797.

E. LFMC: Flexible steel conduit with PVC jacket and complying with UL 360.

F. Fittings for Metal Conduit: Comply with NEMA FB 1 and UL 514B.
1. Fittings for EMT:

a. Material: Steel.
b. Type: compression.

2. Expansion Fittings: PVC or steel to match conduit type, complying with UL 651, rated for environmental conditions where installed, and including flexible external bonding jumper.

G. Joint Compound for IMC, GRC, or ARC: Approved, as defined in NFPA 70, by authorities having jurisdiction for use in conduit assemblies, and compounded for use to lubricate and protect threaded conduit joints from corrosion and to enhance their conductivity.

2.2 NONMETALLIC CONDUITS, TUBING, AND FITTINGS

A. Listing and Labeling: Nonmetallic conduits, tubing, and fittings shall be listed and labeled as defined in NFPA 70, by a qualified testing agency, and marked for intended location and application.

Copyright 2014 AIA MasterSpec Premium

B. ENT: Comply with NEMA TC 13 and UL 1653.

C. RNC: Type EPC-40-PVC, complying with NEMA TC 2 and UL 651 unless otherwise indicated.

D. LFNC: Comply with UL 1660.

E. Rigid HDPE: Comply with UL 651A.

F. Continuous HDPE: Comply with UL 651B.

G. Coilable HDPE: Preassembled with conductors or cables, and complying with ASTM D 3485.

H. RTRC: Comply with UL 1684A and NEMA TC 14.

I. Fittings for ENT and RNC: Comply with NEMA TC 3; match to conduit or tubing type and material.

J. Fittings for LFNC: Comply with UL 514B.

K. Solvents and Adhesives: As recommended by conduit manufacturer.

2.3 METAL WIREWAYS AND AUXILIARY GUTTERS

A. Description: Sheet metal, complying with UL 870 and NEMA 250, Type 1 unless otherwise indicated, and sized according to NFPA 70.

1. Metal wireways installed outdoors shall be listed and labeled as defined in NFPA 70, by a qualified testing agency, and marked for intended location and application.

B. Fittings and Accessories: Include covers, couplings, offsets, elbows, expansion joints, adapters, hold-down straps, end caps, and other fittings to match and mate with wireways as required for complete system.

C. Wireway Covers: **Screw-cover type** unless otherwise indicated.

D. Finish: Manufacturer's standard enamel finish.

2.4 BOXES, ENCLOSURES, AND CABINETS

A. General Requirements for Boxes, Enclosures, and Cabinets: Boxes, enclosures, and cabinets installed in wet locations shall be listed for use in wet locations.

B. Sheet Metal Outlet and Device Boxes: Comply with NEMA OS 1 and UL 514A.

C. Cast-Metal Outlet and Device Boxes: Comply with NEMA FB 1, aluminum, Type FD, with gasketed cover.

Copyright 2014 AIA MasterSpec Premium

D. Nonmetallic Outlet and Device Boxes: Comply with NEMA OS 2 and UL 514C.

E. Luminaire Outlet Boxes: Nonadjustable, designed for attachment of luminaire weighing 50 lb (23 kg). Outlet boxes designed for attachment of luminaires weighing more than 50 lb (23 kg) shall be listed and marked for the maximum allowable weight.

F. Paddle Fan Outlet Boxes: Nonadjustable, designed for attachment of paddle fan weighing 70 lb (32 kg).

1. Listing and Labeling: Paddle fan outlet boxes shall be listed and labeled as defined in NFPA 70, by a qualified testing agency, and marked for intended location and application.

G. Small Sheet Metal Pull and Junction Boxes: NEMA OS 1.

H. Cast-Metal Access, Pull, and Junction Boxes: Comply with NEMA FB 1 and UL 1773, cast aluminum with gasketed cover.

I. Box extensions used to accommodate new building finishes shall be of same material as recessed box.

J. Device Box Dimensions: 4 inches square by 2-1/8 inches deep (100 mm square by 60 mm deep.

K. Gangable boxes are prohibited.

L. Hinged-Cover Enclosures: Comply with UL 50 and NEMA 250, Type 1 with continuous-hinge cover with flush latch unless otherwise indicated.

1. Metal Enclosures: Steel, finished inside and out with manufacturer's standard enamel.
2. Nonmetallic Enclosures: Fiberglass.
3. Interior Panels: Steel; all sides finished with manufacturer's standard enamel.

M. Cabinets:

1. NEMA 250, Type 1 galvanized-steel box with removable interior panel and removable front, finished inside and out with manufacturer's standard enamel.
2. Hinged door in front cover with flush latch and concealed hinge.
3. Key latch to match panelboards.
4. Metal barriers to separate wiring of different systems and voltage.
5. Accessory feet where required for freestanding equipment.
6. Nonmetallic cabinets shall be listed and labeled as defined in NFPA 70, by a qualified testing agency, and marked for intended location and application.

PART 3 - EXECUTION

3.1 RACEWAY APPLICATION

A. Indoors: Apply raceway products as specified below unless otherwise indicated:

1. Exposed, Not Subject to Physical Damage: EMT or RNC.

Copyright 2014 AIA MasterSpec Premium

2. Exposed, Not Subject to Severe Physical Damage: EMT or RNC identified for such use.
3. Exposed and Subject to Severe Physical Damage: GRC, IMC. Raceway locations include the following:

    a. Loading dock.
    b. Corridors used for traffic of mechanized carts, forklifts, and pallet-handling units.
    c. Mechanical rooms.
    d. Gymnasiums.

4. Concealed in Ceilings and Interior Walls and Partitions: EMT.
5. Connection to Vibrating Equipment (Including Transformers and Hydraulic, Pneumatic, Electric Solenoid, or Motor-Driven Equipment): FMC, except use LFMC in damp or wet locations.
6. Damp or Wet Locations: GRC, IMC.
7. Boxes and Enclosures: NEMA 250, Type 1, except use NEMA 250, Type 4 stainless steel in institutional and commercial kitchens and damp or wet locations.

B. Minimum Raceway Size: 1/2-inch (16-mm) 3/4-inch (21-mm) trade size.

C. Raceway Fittings: Compatible with raceways and suitable for use and location.

1. Rigid and Intermediate Steel Conduit: Use threaded rigid steel conduit fittings unless otherwise indicated. Comply with NEMA FB 2.10.
2. PVC Externally Coated, Rigid Steel Conduits: Use only fittings listed for use with this type of conduit. Patch and seal all joints, nicks, and scrapes in PVC coating after installing conduits and fittings. Use sealant recommended by fitting manufacturer and apply in thickness and number of coats recommended by manufacturer.
3. EMT: Use compression, steel fittings. Comply with NEMA FB 2.10.
4. Flexible Conduit: Use only fittings listed for use with flexible conduit. Comply with NEMA FB 2.20.

D. Install nonferrous conduit or tubing for circuits operating above 60 Hz. Where aluminum raceways are installed for such circuits and pass through concrete, install in nonmetallic sleeve.

E. Do not install aluminum conduits, boxes, or fittings in contact with concrete or earth.

F. Install surface raceways only where indicated on Drawings.

G. Do not install nonmetallic conduit where ambient temperature exceeds 120 deg F (49 deg C) .

3.2 INSTALLATION

A. Comply with NECA 1 and NECA 101 for installation requirements except where requirements on Drawings or in this article are stricter. Comply with NECA 102 for aluminum conduits. Comply with NFPA 70 limitations for types of raceways allowed in specific occupancies and number of floors.

B. Keep raceways at least 6 inches (150 mm) away from parallel runs of flues and steam or hot-water pipes. Install horizontal raceway runs above water and steam piping.

Copyright 2014 AIA MasterSpec Premium

C. Complete raceway installation before starting conductor installation.

D. Comply with requirements in Section 260529 "Hangers and Supports for Electrical Systems" for hangers and supports.

E. Arrange stub-ups so curved portions of bends are not visible above finished slab.

F. Install no more than the equivalent of three 90-degree bends in any conduit run except for control wiring conduits, for which fewer bends are allowed. Support within 12 inches (300 mm) of changes in direction.

G. Conceal conduit and EMT within finished walls, ceilings, and floors unless otherwise indicated. Install conduits parallel or perpendicular to building lines.

H. Support conduit within 12 inches ((300 mm)) of enclosures to which attached.

I. Stub-ups to Above Recessed Ceilings:

1. Use EMT, IMC, or RMC for raceways.
2. Use a conduit bushing or insulated fitting to terminate stub-ups not terminated in hubs or in an enclosure.

J. Threaded Conduit Joints, Exposed to Wet, Damp, Corrosive, or Outdoor Conditions: Apply listed compound to threads of raceway and fittings before making up joints. Follow compound manufacturer's written instructions.

K. Raceway Terminations at Locations Subject to Moisture or Vibration: Use insulating bushings to protect conductors including conductors smaller than No. 4 AWG.

L. Terminate threaded conduits into threaded hubs or with locknuts on inside and outside of boxes or cabinets. Install bushings on conduits up to 1-1/4-inch (35mm) trade size and insulated throat metal bushings on 1-1/2-inch (41-mm) trade size and larger conduits terminated with locknuts. Install insulated throat metal grounding bushings on service conduits.

M. Install raceways square to the enclosure and terminate at enclosures with locknuts. Install locknuts hand tight plus 1/4 turn more.

N. Do not rely on locknuts to penetrate nonconductive coatings on enclosures. Remove coatings in the locknut area prior to assembling conduit to enclosure to assure a continuous ground path.

O. Cut conduit perpendicular to the length. For conduits 2-inch (53-mm) trade size and larger, use roll cutter or a guide to make cut straight and perpendicular to the length.

P. Install pull wires in empty raceways. Use polypropylene or monofilament plastic line with not less than 200-lb (90-kg) tensile strength. Leave at least 12 inches (300 mm) of slack at each end of pull wire. Cap underground raceways designated as spare above grade alongside raceways in use.

Q. Comply with manufacturer's written instructions for solvent welding RNC and fittings.

R. Expansion-Joint Fittings:

Copyright 2014 AIA MasterSpec Premium

1. Install in each run of aboveground RNC that is located where environmental temperature change may exceed 30 deg F (17 deg C) and that has straight-run length that exceeds 25 feet (7.6 m). Install in each run of aboveground RMC conduit that is located where environmental temperature change may exceed 100 deg F (55 deg C) and that has straight-run length that exceeds 100 feet (30 m).

2. Install fitting(s) that provide expansion and contraction for at least 0.00041 inch per foot of length of straight run per deg F (0.06 mm per meter of length of straight run per deg C) of temperature change for PVC conduits. Install fitting(s) that provide expansion and contraction for at least 0.000078 inch per foot of length of straight run per deg F (0.0115 mm per meter of length of straight run per deg C) of temperature change for metal conduits.
3. Install expansion fittings at all locations where conduits cross building or structure expansion joints.
4. Install each expansion-joint fitting with position, mounting, and piston setting selected according to manufacturer's written instructions for conditions at specific location at time of installation. Install conduit supports to allow for expansion movement.

S. Flexible Conduit Connections: Comply with NEMA RV 3. Use a maximum of 72 inches (1830 mm) of flexible conduit for recessed and semirecessed luminaires**,** equipment subject to vibration, noise transmission, or movement; and for transformers and motors.

1. Use LFMC in damp or wet locations subject to severe physical damage.
2. Use LFMC or LFNC in damp or wet locations not subject to severe physical damage.

T. Mount boxes at heights indicated on Drawings. If mounting heights of boxes are not individually indicated, give priority to ADA requirements. Install boxes with height measured to center, top, bottom of box unless otherwise indicated.

U. Recessed Boxes in Masonry Walls: Saw-cut opening for box in center of cell of masonry block, and install box flush with surface of wall. Prepare block surfaces to provide a flat surface for a raintight connection between box and cover plate or supported equipment and box.

V. Horizontally separate boxes mounted on opposite sides of walls so they are not in the same vertical channel.

W. Locate boxes so that cover or plate will not span different building finishes.

X. Support boxes of three gangs or more from more than one side by spanning two framing members or mounting on brackets specifically designed for the purpose.

Y. Fasten junction and pull boxes to or support from building structure. Do not support boxes by conduits.

Z. Set metal floor boxes level and flush with finished floor surface.

AA. Set nonmetallic floor boxes level. Trim after installation to fit flush with finished floor surface.

Copyright 2014 AIA MasterSpec Premium

3.3 SLEEVE AND SLEEVE-SEAL INSTALLATION FOR ELECTRICAL PENETRATIONS

A. Install sleeves and sleeve seals at penetrations of exterior floor and wall assemblies.

3.4 FIRESTOPPING

A. Install firestopping at penetrations of fire-rated floor and wall assemblies.

3.5 PROTECTION

A. Protect coatings, finishes, and cabinets from damage and deterioration.

1. Repair damage to galvanized finishes with zinc-rich paint recommended by manufacturer.
2. Repair damage to PVC coatings or paint finishes with matching touchup coating recommended by manufacturer.

END OF SECTION 260533

Copyright 2013 AIA MasterSpec Premium

SECTION 262416 - PANELBOARDS

PART 1 - GENERAL

1.1 RELATED DOCUMENTS

A. Drawings and general provisions of the Contract, including General and Supplementary Conditions and Division 01 Specification Sections, apply to this Section.

1.2 SUMMARY

A. Section Includes:

1. Distribution panelboards.
2. Lighting and appliance branch-circuit panelboards.

1.3 DEFINITIONS

A. ATS: Acceptance testing specification.

B. GFCI: Ground-fault circuit interrupter.

C. GFEP: Ground-fault equipment protection.

D. HID: High-intensity discharge.

E. MCCB: Molded-case circuit breaker.

F. SPD: Surge protective device.

G. VPR: Voltage protection rating.

1.4 ACTION SUBMITTALS

A. Product Data: For each type of panelboard.

1. Include materials, switching and overcurrent protective devices, SPDs, accessories, and components indicated.
2. Include dimensions and manufacturers' technical data on features, performance, electrical characteristics, ratings, and finishes.

B. Shop Drawings: For each panelboard and related equipment.

1. Include dimensioned plans, elevations, sections, and details.
2. Show tabulations of installed devices with nameplates, conductor termination sizes, equipment features, and ratings.

Copyright 2013 AIA MasterSpec Premium

3. Detail enclosure types including mounting and anchorage, environmental protection, knockouts, corner treatments, covers and doors, gaskets, hinges, and locks.
4. Detail bus configuration, current, and voltage ratings.
5. Short-circuit current rating of panelboards and overcurrent protective devices.
6. Include evidence of NRTL listing for series rating of installed devices.
7. Include evidence of NRTL listing for SPD as installed in panelboard.
8. Detail features, characteristics, ratings, and factory settings of individual overcurrent protective devices and auxiliary components.
9. Include wiring diagrams for power, signal, and control wiring.
10. Key interlock scheme drawing and sequence of operations.
11. Include time-current coordination curves for each type and rating of overcurrent protective device included in panelboards. Submit on translucent log-log graft paper; include selectable ranges for each type of overcurrent protective device. Include an Internet link for electronic access to downloadable PDF of the coordination curves.

1.5 INFORMATIONAL SUBMITTALS

A. Qualification Data: For testing agency.

B. Panelboard Schedules: For installation in panelboards

1.6 CLOSEOUT SUBMITTALS

A. Operation and Maintenance Data: For panelboards and components to include in emergency, operation, and maintenance manuals. In addition to items specified in Section 017823 "Operation and Maintenance Data," include the following:

1. Manufacturer's written instructions for testing and adjusting overcurrent protective devices.
2. Time-current curves, including selectable ranges for each type of overcurrent protective device that allows adjustments.

1.7 MAINTENANCE MATERIAL SUBMITTALS

A. Furnish extra materials that match products installed and that are packaged with protective covering for storage and identified with labels describing contents.

1. Keys: Two spares for each type of panelboard cabinet lock.
2. Circuit Breakers Including GFCI and GFEP Types: Two spares for each panelboard.
3. Fuses for Fused Switches: Equal to 10 percent of quantity installed for each size and type, but no fewer than three of each size and type.
4. Fuses for Fused Power-Circuit Devices: Equal to 10 percent of quantity installed for each size and type, but no fewer than three of each size and type.

1.8 QUALITY ASSURANCE

A. Manufacturer Qualifications: ISO 9001 or 9002 certified.

Copyright 2013 AIA MasterSpec Premium

1.9 DELIVERY, STORAGE, AND HANDLING

A. Remove loose packing and flammable materials from inside panelboards; install temporary electric heating (250 W per panelboard) to prevent condensation.

B. Handle and prepare panelboards for installation according to NEMA PB 1.

1.10 FIELD CONDITIONS

A. Environmental Limitations:

1. Do not deliver or install panelboards until spaces are enclosed and weathertight, wet work in spaces is complete and dry, work above panelboards is complete, and temporary HVAC system is operating and maintaining ambient temperature and humidity conditions at occupancy levels during the remainder of the construction period.
2. Rate equipment for continuous operation under the following conditions unless otherwise indicated:

a. Ambient Temperature: Not exceeding minus 22 deg F (minus 30 deg C) 23 deg F (minus 5 deg C) to plus 104 deg F (plus 40 deg C).
b. Altitude: Not exceeding 6600 feet (2000 m).

B. Service Conditions: NEMA PB 1, usual service conditions, as follows:

1. Ambient temperatures within limits specified.
2. Altitude not exceeding 6600 feet (2000 m).

C. Interruption of Existing Electric Service: Do not interrupt electric service to facilities occupied by Owner or others unless permitted under the following conditions and then only after arranging to provide temporary electric service according to requirements indicated:

1. Notify Construction Manager no fewer than two days in advance of proposed interruption of electric service.
2. Do not proceed with interruption of electric service without Construction Manager's written permission.
3. Comply with NFPA 70E.

1.11 WARRANTY

A. Manufacturer's Warranty: Manufacturer agrees to repair or replace panelboards that fail in materials or workmanship within specified warranty period.

1. Panelboard Warranty Period: **18**months from date of Substantial Completion.

B. Special Warranty: Manufacturer's standard form in which manufacturer agrees to repair or replace SPD that fails in materials or workmanship within specified warranty period.

1. SPD Warranty Period: **Five** years from date of Substantial Completion.

Copyright 2013 AIA MasterSpec Premium

PART 2 - PRODUCTS

2.1 PANELBOARDS AND LOAD CENTERS COMMON REQUIREMENTS

A. Fabricate and test panelboards according to IEEE 344 to withstand seismic forces defined in Section 260548.16 "Seismic Controls for Electrical Systems."

B. Product Selection for Restricted Space: Drawings indicate maximum dimensions for panelboards including clearances between panelboards and adjacent surfaces and other items. Comply with indicated maximum dimensions.

C. Electrical Components, Devices, and Accessories: Listed and labeled as defined in NFPA 70, by a qualified testing agency, and marked for intended location and application.

D. Comply with NEMA PB 1.

E. Comply with NFPA 70.

F. Enclosures: Flush and Surface-mounted, dead-front cabinets.

1. Rated for environmental conditions at installed location.

a. Indoor Dry and Clean Locations: NEMA 250, Type 1.
b. Outdoor Locations: NEMA 250, Type 3R.
c. Kitchen Areas: NEMA 250, Type 4X, stainless steel.
d. Other Wet or Damp Indoor Locations: NEMA 250, Type 4.
e. Indoor Locations Subject to Dust, Falling Dirt, and Dripping Noncorrosive Liquids: NEMA 250, Type 12.

2. Height: 84 inches (2.13 m) maximum.
3. Front: Secured to box with concealed trim clamps. For surface-mounted fronts, match box dimensions; for flush-mounted fronts, overlap box. Trims shall cover all live parts and shall have no exposed hardware.
4. Hinged Front Cover: Entire front trim hinged to box and with standard door within hinged trim cover. Trims shall cover all live parts and shall have no exposed hardware.
5. Skirt for Surface-Mounted Panelboards: Same gage and finish as panelboard front with flanges for attachment to panelboard, wall, and ceiling or floor.
6. Gutter Extension and Barrier: Same gage and finish as panelboard enclosure; integral with enclosure body. Arrange to isolate individual panel sections.
7. Finishes:

a. Panels and Trim: galvanized steel, factory finished immediately after cleaning and pretreating with manufacturer's standard two-coat, baked-on finish consisting of prime coat and thermosetting topcoat.
b. Back Boxes: Galvanized steel.
c. Fungus Proofing: Permanent fungicidal treatment for overcurrent protective devices and other components.

G. Incoming Mains:

Copyright 2013 AIA MasterSpec Premium

1. Location: Top.
2. Main Breaker: Main lug interiors up to 400 amperes shall be field convertible to main breaker.

H. Phase, Neutral, and Ground Buses:

1. Material: Hard-drawn copper, 98 percent conductivity.

   a. Plating shall run entire length of bus.
   b. Bus shall be fully rated the entire length.

2. Interiors shall be factory assembled into a unit. Replacing switching and protective devices shall not disturb adjacent units or require removing the main bus connectors.
3. Equipment Ground Bus: Adequate for feeder and branch-circuit equipment grounding conductors; bonded to box.
4. Isolated Ground Bus: Adequate for branch-circuit isolated ground conductors; insulated from box.
5. Full-Sized Neutral: Equipped with full-capacity bonding strap for service entrance applications. Mount electrically isolated from enclosure. Do not mount neutral bus in gutter.
6. Extra-Capacity Neutral Bus: Neutral bus rated 200 percent of phase bus and listed and labeled by an NRTL acceptable to authority having jurisdiction, as suitable for nonlinear loads in electronic-grade panelboards and others designated on Drawings. Connectors shall be sized for double-sized or parallel conductors as indicated on Drawings. Do not mount neutral bus in gutter.
7. Split Bus: Vertical buses divided into individual vertical sections.
8. .

I. Conductor Connectors: Suitable for use with conductor material and sizes.

1. Material: Hard-drawn copper, 98 percent conductivity.
2. Terminations shall allow use of 75 deg C rated conductors without derating.
3. Size: Lugs suitable for indicated conductor sizes, with additional gutter space, if required, for larger conductors.
4. Main and Neutral Lugs: Compression type, with a lug on the neutral bar for each pole in the panelboard.
5. Ground Lugs and Bus-Configured Terminators: Compression type, with a lug on the bar for each pole in the panelboard.

J. NRTL Label: Panelboards or load centers shall be labeled by an NRTL acceptable to authority having jurisdiction for use as service equipment with one or more main service disconnecting and overcurrent protective devices. Panelboards or load centers shall have meter enclosures, wiring, connections, and other provisions for utility metering. Coordinate with utility company for exact requirements.

K. Future Devices: Panelboards or load centers shall have mounting brackets, bus connections, filler plates, and necessary appurtenances required for future installation of devices.

1. Percentage of Future Space Capacity: 20 percent.

Copyright 2013 AIA MasterSpec Premium

L. Panelboard Short-Circuit Current Rating: Rated for series-connected system with integral or remote upstream overcurrent protective devices and labeled by an NRTL. Include label or manual with size and type of allowable upstream and branch devices listed and labeled by an NRTL for series-connected short-circuit rating.

1. Panelboards rated 240 V or less shall have short-circuit ratings as shown on Drawings, but not less than 10,000 A rms symmetrical.
2. Panelboards rated above 240 V and less than 600 V shall have short-circuit ratings as shown on Drawings, but not less than 14,000 A rms symmetrical.

M. Panelboard Short-Circuit Current Rating: Fully rated to interrupt symmetrical short-circuit current available at terminals. Assembly listed by an NRTL for 100 percent interrupting capacity.

1. Panelboards and overcurrent protective devices rated 240 V or less shall have short-circuit ratings as shown on Drawings, but not less than 10,000 A rms symmetrical.
2. Panelboards and overcurrent protective devices rated above 240 V and less than 600 V shall have short-circuit ratings as shown on Drawings, but not less than 14,000 A rms symmetrical.

2.2 PERFORMANCE REQUIREMENTS

A. Seismic Performance: Panelboards shall withstand the effects of earthquake motions determined according to ASCE/SEI 7.

1. The term "withstand" means "the unit will remain in place without separation of any parts from the device when subjected to the seismic forces specified."

B. Surge Suppression: Factory installed as an integral part of indicated panelboards, complying with UL 1449 SPD Type 1.

2.3 POWER PANELBOARDS

A.

B. Panelboards: NEMA PB 1, distribution type.

C. Doors: Secured with vault-type latch with tumbler lock; keyed alike.

1. For doors more than 36 inches (914 mm) high, provide two latches, keyed alike.

D. Mains: Circuit breaker.

E. Branch Overcurrent Protective Devices for Circuit-Breaker Frame Sizes 125 A and Smaller: Bolt-on circuit breakers.

F. Branch Overcurrent Protective Devices for Circuit-Breaker Frame Sizes Larger Than 125 A: Bolt-on circuit breakers.

Copyright 2013 AIA MasterSpec Premium

G. Contactors in Main Bus: NEMA ICS 2, Class A, electrically held, general-purpose controller, with same short-circuit interrupting rating as panelboard.

1. Internal Control-Power Source: Control-power transformer, with fused primary and secondary terminals, connected to main bus ahead of contactor connection.
2. External Control-Power Source: 120-V branch circuit.

2.4 LIGHTING AND APPLIANCE BRANCH-CIRCUIT PANELBOARDS

A.

B. Panelboards: NEMA PB 1, lighting and appliance branch-circuit type.

C. Mains: Circuit breaker.

D. Branch Overcurrent Protective Devices: Bolt-on circuit breakers, replaceable without disturbing adjacent units.

E. Contactors in Main Bus: NEMA ICS 2, Class A, electrically held, general-purpose controller, with same short-circuit interrupting rating as panelboard.

1. Internal Control-Power Source: Control-power transformer, with fused primary and secondary terminals, connected to main bus ahead of contactor connection.
2. External Control-Power Source: 120-V branch circuit.

F. Doors: Concealed hinges; secured with flush latch with tumbler lock; keyed alike.

G. Doors: Door-in-door construction with concealed hinges; secured with multipoint latch with tumbler lock; keyed alike. Outer door shall permit full access to the panel interior. Inner door shall permit access to breaker operating handles and labeling, but current carrying terminals and bus shall remain concealed.

2.5 DISCONNECTING AND OVERCURRENT PROTECTIVE DEVICES

A. MCCB: Comply with UL 489, with interrupting capacity to meet available fault currents.

1. Thermal-Magnetic Circuit Breakers:

a. Inverse time-current element for low-level overloads.
b. Instantaneous magnetic trip element for short circuits.
c. Adjustable magnetic trip setting for circuit-breaker frame sizes 250 A and larger.

2. Adjustable Instantaneous-Trip Circuit Breakers: Magnetic trip element with front-mounted, field-adjustable trip setting.
3. Electronic Trip Circuit Breakers:

a. RMS sensing.
b. Field-replaceable rating plug or electronic trip.
c. Digital display of settings, trip targets, and indicated metering displays.
d. Multi-button keypad to access programmable functions and monitored data.

Copyright 2013 AIA MasterSpec Premium

e. Ten-event, trip-history log. Each trip event shall be recorded with type, phase, and magnitude of fault that caused the trip.
f. Integral test jack for connection to portable test set or laptop computer.
g. Field-Adjustable Settings:

1) Instantaneous trip.
2) Long- and short-time pickup levels.
3) Long and short time adjustments.
4) Ground-fault pickup level, time delay, and I squared T response.

4. Current-Limiting Circuit Breakers: Frame sizes 400 A and smaller; let-through ratings less than NEMA FU 1, RK-5.
5. GFCI Circuit Breakers: Single- and double-pole configurations with Class A ground-fault protection (6-mA trip).
6. GFEP Circuit Breakers: Class B ground-fault protection (30-mA trip).
7. Arc-Fault Circuit Interrupter Circuit Breakers: Comply with UL 1699; 120/240-V, single-pole configuration.
8. Subfeed Circuit Breakers: Vertically mounted.
9. MCCB Features and Accessories:

a. Standard frame sizes, trip ratings, and number of poles.
b. Breaker handle indicates tripped status.
c. UL listed for reverse connection without restrictive line or load ratings.
d. Lugs: Compression style, suitable for number, size, trip ratings, and conductor materials.
e. Application Listing: Appropriate for application; Type SWD for switching fluorescent lighting loads; Type HID for feeding fluorescent and HID lighting circuits.
f. Ground-Fault Protection: Integrally mounted relay and trip unit with adjustable pickup and time-delay settings, push-to-test feature, and ground-fault indicator.
g. Communication Capability: Din-rail-mounted communication module with functions and features compatible with power monitoring and control system specified in Section 260913 "Electrical Power Monitoring and Control."
h. Shunt Trip: 120-Vtrip coil energized from separate circuit, set to trip at 75 percent of rated voltage.
i. Undervoltage Trip: Set to operate at 35 to 75 percent of rated voltage with field-adjustable 0.1- to 0.6-second time delay.
j. Rating Plugs: Three-pole breakers with ampere ratings greater than 150amperes shall have interchangeable rating plugs or electronic adjustable trip units.
k. Auxiliary Contacts: One, SPDT switch with "a" and "b" contacts; "a" contacts mimic circuit-breaker contacts and "b" contacts operate in reverse of circuit-breaker contacts.
l. Alarm Switch: Single-pole, normally open contact that actuates only when circuit breaker trips.
m. Key Interlock Kit: Externally mounted to prohibit circuit-breaker operation; key shall be removable only when circuit breaker is in off position.
n. Zone-Selective Interlocking: Integral with electronic trip unit; for interlocking ground-fault protection function with other upstream or downstream devices.
o. Multipole units enclosed in a single housing with a single handle.
p. Handle Padlocking Device: Fixed attachment, for locking circuit-breaker handle in off position.

Copyright 2013 AIA MasterSpec Premium

q. Handle Clamp: Loose attachment, for holding circuit-breaker handle in on position.

2.6 IDENTIFICATION

A. Panelboard Label: Manufacturer's name and trademark, voltage, amperage, number of phases, and number of poles shall be located on the interior of the panelboard door.

B. Breaker Labels: Faceplate shall list current rating, UL and IEC certification standards, and AIC rating.

C. Circuit Directory: Directory card inside panelboard door, mounted in metal frame with transparent protective cover.

1. Circuit directory shall identify specific purpose with detail sufficient to distinguish it from all other circuits.

D. Circuit Directory: Computer-generated circuit directory mounted inside panelboard door with transparent plastic protective cover.

1. Circuit directory shall identify specific purpose with detail sufficient to distinguish it from all other circuits.

2.7 ACCESSORY COMPONENTS AND FEATURES

A. Accessory Set: Include tools and miscellaneous items required for overcurrent protective device test, inspection, maintenance, and operation.

B. Portable Test Set: For testing functions of solid-state trip devices without removing from panelboard. Include relay and meter test plugs suitable for testing panelboard meters and switchboard class relays.

PART 3 - EXECUTION

3.1 EXAMINATION

A. Verify actual conditions with field measurements prior to ordering panelboards to verify that equipment fits in allocated space in, and comply with, minimum required clearances specified in NFPA 70.

B. Receive, inspect, handle, and store panelboards according to NEMA PB 1.1.

C. Examine panelboards before installation. Reject panelboards that are damaged, rusted, or have been subjected to water saturation.

D. Examine elements and surfaces to receive panelboards for compliance with installation tolerances and other conditions affecting performance of the Work.

Copyright 2013 AIA MasterSpec Premium

E. Proceed with installation only after unsatisfactory conditions have been corrected.

3.2 INSTALLATION

A. Coordinate layout and installation of panelboards and components with other construction that penetrates walls or is supported by them, including electrical and other types of equipment, raceways, piping, encumbrances to workspace clearance requirements, and adjacent surfaces. Maintain required workspace clearances and required clearances for equipment access doors and panels.

B. Comply with NECA 1.

C. Install panelboards and accessories according to NEMA PB 1.1.

D. Equipment Mounting:

1. Install panelboards on cast-in-place concrete equipment base(s).
2. Attach panelboard to the vertical finished or structural surface behind the panelboard.

E. Temporary Lifting Provisions: Remove temporary lifting eyes, channels, and brackets and temporary blocking of moving parts from panelboards.

F. Comply with mounting and anchoring requirements specified in Section 260548.16 "Seismic Controls for Electrical Systems."

G. Mount top of trim **90 inches (2286 mm)** above finished floor unless otherwise indicated.

H. Mount panelboard cabinet plumb and rigid without distortion of box.

I. Mount recessed panelboards with fronts uniformly flush with wall finish and mating with back box.

J. Mounting panelboards with space behind is recommended for damp, wet, or dirty locations. The steel slotted supports in the following paragraph provide an even mounting surface and the recommended space behind to prevent moisture or dirt collection.

K. Mount surface-mounted panelboards to steel slotted supports 5/8 inch (16 mm), 1 1/4 inch (32 mm) in depth. Orient steel slotted supports vertically.

L. Install overcurrent protective devices and controllers not already factory installed.

1. Set field-adjustable, circuit-breaker trip ranges.
2. Tighten bolted connections and circuit breaker connections using calibrated torque wrench or torque screwdriver per manufacturer's written instructions.

M. Make grounding connections and bond neutral for services and separately derived systems to ground. Make connections to grounding electrodes, separate grounds for isolated ground bars, and connections to separate ground bars.

N. Install filler plates in unused spaces.

Copyright 2013 AIA MasterSpec Premium

O. Stub four 1-inch (27-EMT) empty conduits from panelboard into accessible ceiling space or space designated to be ceiling space in the future. Stub four 1-inch (27-EMT) empty conduits into raised floor space or below slab not on grade.

P. Arrange conductors in gutters into groups and bundle and wrap with wire ties.

Q. Mount spare fuse cabinet in accessible location.

3.3 IDENTIFICATION

A. Identify field-installed conductors, interconnecting wiring, and components; install warning signs complying with requirements in Section 260553 "Identification for Electrical Systems."

B. Create a directory to indicate installed circuit loads after balancing panelboard loads; incorporate Owner's final room designations. Obtain approval before installing. Handwritten directories are not acceptable. Install directory inside panelboard door.

C. Panelboard Nameplates: Label each panelboard with a nameplate complying with requirements for identification specified in Section 260553 "Identification for Electrical Systems."

D. Device Nameplates: Label each branch circuit device in power panelboards with a nameplate complying with requirements for identification specified in Section 260553 "Identification for Electrical Systems."

E. Install warning signs complying with requirements in Section 260553 "Identification for Electrical Systems" identifying source of remote circuit.

3.4 FIELD QUALITY CONTROL

A. Manufacturer's Field Service: Engage a factory-authorized service representative to inspect, test, and adjust components, assemblies, and equipment installations, including connections.

B. Perform tests and inspections.

1. Manufacturer's Field Service: Engage a factory-authorized service representative to inspect components, assemblies, and equipment installations, including connections, and to assist in testing.

C. Acceptance Testing Preparation:

1. Test insulation resistance for each panelboard bus, component, connecting supply, feeder, and control circuit.
2. Test continuity of each circuit.

D. Tests and Inspections:

1. Perform each visual and mechanical inspection and electrical test for low-voltage air circuit breakers and low-voltage surge arrestors stated in NETA ATS, Paragraph 7.6 Circuit Breakers and Paragraph 7.19.1 Surge Arrestors, Low-Voltage. Do not perform optional tests. Certify compliance with test parameters.

Copyright 2013 AIA MasterSpec Premium

2. Correct malfunctioning units on-site, where possible, and retest to demonstrate compliance; otherwise, replace with new units and retest.
3. Perform the following infrared scan tests and inspections and prepare reports:

   a. Initial Infrared Scanning: After Substantial Completion, but not more than 60 days after Final Acceptance, perform an infrared scan of each panelboard. Remove front panels so joints and connections are accessible to portable scanner.
   b. Follow-up Infrared Scanning: Perform an additional follow-up infrared scan of each panelboard 11 months after date of Substantial Completion.
   c. Instruments and Equipment:

      1) Use an infrared scanning device designed to measure temperature or to detect significant deviations from normal values. Provide calibration record for device.

E. Panelboards will be considered defective if they do not pass tests and inspections.

F. Prepare test and inspection reports, including a certified report that identifies panelboards included and that describes scanning results, with comparisons of the two scans. Include notation of deficiencies detected, remedial action taken, and observations after remedial action.

3.5 ADJUSTING

A. Adjust moving parts and operable components to function smoothly, and lubricate as recommended by manufacturer.

B. Set field-adjustable circuit-breaker trip ranges as indicated**.**

C. Load Balancing: After Substantial Completion, but not more than 60 days after Final Acceptance, measure load balancing and make circuit changes. Prior to making circuit changes to achieve load balancing, inform Architect of effect on phase color coding.

1. Measure loads during period of normal facility operations.
2. Perform circuit changes to achieve load balancing outside normal facility operation schedule or at times directed by the Architect. Avoid disrupting services such as fax machines and on-line data processing, computing, transmitting, and receiving equipment.
3. After changing circuits to achieve load balancing, recheck loads during normal facility operations. Record load readings before and after changing circuits to achieve load balancing.
4. Tolerance: Maximum difference between phase loads, within a panelboard, shall not exceed 20 percent.

3.6 PROTECTION

A. Temporary Heating: Prior to energizing panelboards, apply temporary heat to maintain temperature according to manufacturer's written instructions.

END OF SECTION 262416

Copyright 2014 AIA MasterSpec Premium

SECTION 262726 - WIRING DEVICES

PART 1 - GENERAL

1.1 RELATED DOCUMENTS

A. Drawings and general provisions of the Contract, including General and Supplementary Conditions and Division 01 Specification Sections, apply to this Section.

1.2 SUMMARY

A. Section Includes:

1. Straight-blade convenience, hospital-grade, isolated-ground, and tamper-resistant receptacles.
2. GFCI receptacles.
3. Toggle switches.
4. Decorator-style convenience.
5. Wall switch sensor light switches with dual technology sensors.
6. Wall plates.

1.3 DEFINITIONS

A. Abbreviations of Manufacturers' Names:

1. Cooper: Cooper Wiring Devices; Division of Cooper Industries, Inc.
2. Hubbell: Hubbell Incorporated: Wiring Devices-Kellems.
3. Leviton: Leviton Mfg. Company, Inc.
4. Pass & Seymour: Pass& Seymour/Legrand.

B. BAS: Building automation system.

C. EMI: Electromagnetic interference.

D. GFCI: Ground-fault circuit interrupter.

E. Pigtail: Short lead used to connect a device to a branch-circuit conductor.

F. RFI: Radio-frequency interference.

G. SPD: Surge protective device.

H. UTP: Unshielded twisted pair.

Copyright 2014 AIA MasterSpec Premium

1.4 ACTION SUBMITTALS

A. Product Data: For each type of product.

B. Shop Drawings: List of legends and description of materials and process used for premarking wall plates.

C. Samples: One for each type of device and wall plate specified, in each color specified.

1.5 INFORMATIONAL SUBMITTALS

A. Field quality-control reports.

1.6 CLOSEOUT SUBMITTALS

A. Operation and Maintenance Data: For wiring devices to include in all manufacturers' packing-label warnings and instruction manuals that include labeling conditions.

1.7 MAINTENANCE MATERIAL SUBMITTALS

A. Furnish extra materials that match products installed and that are packaged with protective covering for storage and identified with labels describing contents.

1. Service/Power Poles: One for every 10, but no fewer than one.
2. Floor Service-Outlet Assemblies: One for every 10, but no fewer than one.
3. Poke-Through, Fire-Rated Closure Plugs: One for every five floor service outlets installed, but no fewer than two.
4. SPD Receptacles: One for every 10of each type installed, but no fewer than two of each type.

PART 2 - PRODUCTS

2.1 GENERAL WIRING-DEVICE REQUIREMENTS

A. Wiring Devices, Components, and Accessories: Listed and labeled as defined in NFPA 70, by a qualified testing agency, and marked for intended location and application.

B. Comply with NFPA 70.

C. Devices that are manufactured for use with modular plug-in connectors may be substituted under the following conditions:

1. Connectors shall comply with UL 2459 and shall be made with stranding building wire.
2. Devices shall comply with the requirements in this Section.

D. Devices for Owner-Furnished Equipment:

Copyright 2014 AIA MasterSpec Premium

1. Receptacles: Match plug configurations.
2. Cord and Plug Sets: Match equipment requirements.

E. Source Limitations: Obtain each type of wiring device and associated wall plate from single source from single manufacturer.

2.2 STRAIGHT-BLADE RECEPTACLES

A. Duplex Convenience Receptacles: 125 V, 20 A; comply with NEMA WD 1, NEMA WD 6 Configuration 5-20R, UL 498, and FS W-C-596.

2.3 GFCI RECEPTACLES

A. General Description:

1. 125 V, 20 A, straight blade, feed-through type.
2. Comply with NEMA WD 1, NEMA WD 6 Configuration 5-20R, UL 498, UL 943 Class A, and FS W-C-596.
3. Include indicator light that shows when the GFCI has malfunctioned and no longer provides proper GFCI protection.

2.4 TOGGLE SWITCHES

A. Comply with NEMA WD 1, UL 20, and FS W-S-896.

B. Switches, 120/277 V, 20 A:

2.5 WALL SWITCH SENSOR LIGHT SWITCH, DUAL TECHNOLOGY

A. Description: Switchbox-mounted, combination lighting-control sensor and conventional switch lighting-control unit using dual technology.

1. Connections: Provisions for connection to BAS.
2. Connections: Hard wired.
3. Connections: Wireless.
4. Rated 960 W at 120-V ac for tungsten lighting, 10 A at 120-V ac or 10 A at 277-V ac for fluorescent or LED lighting, and 1/4 hp at 120-V ac.
5. Integral relay for connection to BAS.
6. Adjustable time delay of **15**minutes.
- Able to be locked to Manual-On mode.
- Automatic Light-Level Sensor: Adjustable from 2 to 200 fc (21.5 to 2152 lux).
7. Comply with NEMA WD 1, UL 20, and FS W-S-896.

Copyright 2014 AIA MasterSpec Premium

2.6 FINISHES

A. Device Color:

1. Wiring Devices Connected to Normal Power System: Ivory unless otherwise indicated or required by NFPA 70 or device listing.

B. Wall Plate Color: For plastic covers, match device color.

PART 3 - EXECUTION

3.1 INSTALLATION

A. Comply with NECA 1, including mounting heights listed in that standard, unless otherwise indicated.

B. Coordination with Other Trades:

1. Protect installed devices and their boxes. Do not place wall finish materials over device boxes and do not cut holes for boxes with routers that are guided by riding against outside of boxes.
2. Keep outlet boxes free of plaster, drywall joint compound, mortar, cement, concrete, dust, paint, and other material that may contaminate the raceway system, conductors, and cables.
3. Install device boxes in brick or block walls so that the cover plate does not cross a joint unless the joint is troweled flush with the face of the wall.
4. Install wiring devices after all wall preparation, including painting, is complete.

C. Conductors:

1. Do not strip insulation from conductors until right before they are spliced or terminated on devices.
2. Strip insulation evenly around the conductor using tools designed for the purpose. Avoid scoring or nicking of solid wire or cutting strands from stranded wire.
3. The length of free conductors at outlets for devices shall meet provisions of NFPA 70, Article 300, without pigtails.
4. Existing Conductors:

a. Cut back and pigtail, or replace all damaged conductors.
b. Straighten conductors that remain and remove corrosion and foreign matter.
c. Pigtailing existing conductors is permitted, provided the outlet box is large enough.

D. Device Installation:

1. Replace devices that have been in temporary use during construction and that were installed before building finishing operations were complete.
2. Keep each wiring device in its package or otherwise protected until it is time to connect conductors.

Copyright 2014 AIA MasterSpec Premium

3. Do not remove surface protection, such as plastic film and smudge covers, until the last possible moment.
4. Connect devices to branch circuits using pigtails that are not less than 6 inches (152 mm) in length.
5. When there is a choice, use side wiring with binding-head screw terminals. Wrap solid conductor tightly clockwise, two-thirds to three-fourths of the way around terminal screw.
6. Use a torque screwdriver when a torque is recommended or required by manufacturer.
7. When conductors larger than No. 12 AWG are installed on 15- or 20-A circuits, splice No. 12 AWG pigtails for device connections.
8. Tighten unused terminal screws on the device.
9. When mounting into metal boxes, remove the fiber or plastic washers used to hold device-mounting screws in yokes, allowing metal-to-metal contact.

E. Receptacle Orientation:

1. Install ground pin of vertically mounted receptacles up, and on horizontally mounted receptacles to the left.
2. Install hospital-grade receptacles in patient-care areas with the ground pin or neutral blade at the top.

F. Device Plates: Do not use oversized or extra-deep plates. Repair wall finishes and remount outlet boxes when standard device plates do not fit flush or do not cover rough wall opening.

G. Dimmers:

1. Install dimmers within terms of their listing.
2. Verify that dimmers used for fan-speed control are listed for that application.
3. Install unshared neutral conductors on line and load side of dimmers according to manufacturers' device listing conditions in the written instructions.

H. Arrangement of Devices: Unless otherwise indicated, mount flush, with long dimension vertical and with grounding terminal of receptacles on top. Group adjacent switches under single, multigang wall plates.

I. Adjust locations of floor service outlets and service poles to suit arrangement of partitions and furnishings.

3.2 GFCI RECEPTACLES

A. Install non-feed-through-type GFCI receptacles where protection of downstream receptacles is not required.

3.3 IDENTIFICATION

A. Identify each receptacle with panelboard identification and circuit number. Use hot, stamped, or engraved machine printing with black-filled lettering on face of plate, and durable wire markers or tags inside outlet boxes.

Copyright 2014 AIA MasterSpec Premium

3.4 FIELD QUALITY CONTROL

A. Test Instruments: Use instruments that comply with UL 1436.

B. Test Instrument for Convenience Receptacles: Digital wiring analyzer with digital readout or illuminated digital-display indicators of measurement.

C. Perform the following tests and inspections:
   1. Test Instruments: Use instruments that comply with UL 1436.
   2. Test Instrument for Convenience Receptacles: Digital wiring analyzer with digital readout or illuminated digital-display indicators of measurement.

D. Tests for Convenience Receptacles:

   1. Line Voltage: Acceptable range is 105 to 132 V.
   2. Percent Voltage Drop under 15-A Load: A value of 6 percent or higher is unacceptable.
   3. Ground Impedance: Values of up to 2 ohms are acceptable.
   4. GFCI Trip: Test for tripping values specified in UL 1436 and UL 943.
   5. Using the test plug, verify that the device and its outlet box are securely mounted.
   6. Tests shall be diagnostic, indicating damaged conductors, high resistance at the circuit breaker, poor connections, inadequate fault current path, defective devices, or similar problems. Correct circuit conditions, remove malfunctioning units and replace with new ones, and retest as specified above.

E. Wiring device will be considered defective if it does not pass tests and inspections.

F. Prepare test and inspection reports.

END OF SECTION 262726

Copyright 2014 AIA MasterSpec Premium

SECTION 265116 - FLUORESCENT INTERIOR LIGHTING

PART 1 - GENERAL

1.1 RELATED DOCUMENTS

A. Drawings and general provisions of the Contract, including General and Supplementary Conditions and Division 01 Specification Sections, apply to this Section.

1.2 SUMMARY

A. Section Includes:

1. Interior fluorescent luminaires, lamps, and ballasts.
2. Luminaire supports.

1.3 DEFINITIONS

A. BIM: Building information model.

B. CAD: Computer-aided design.

C. CCT: Correlated color temperature.

D. CRI: Color Rendering Index.

E. Fixture: See "Luminaire."

F. IP: International Protection or Ingress Protection Rating

G. Lumen: Measured output of lamp and luminaire, or both.

H. Luminaire: Complete lighting unit, including lamp, reflector, and housing.

1.4 ACTION SUBMITTALS

A. Product Data: For each type of product.

1. Arrange in order of luminaire designation.
2. Include data on features, accessories, and finishes.
3. Include physical description and dimensions of luminaires.
4. Ballast, including BF.
5. Include life, output (lumens, CCT, and CRI), and energy efficiency data.
6. Include photometric data and adjustment factors based on laboratory tests, complying with IESNA Lighting Measurements Testing and Calculation Guides, of each luminaire

Copyright 2014 AIA MasterSpec Premium

type. The adjustment factors shall be for lamps, ballasts, and accessories identical to those indicated for the luminaire as applied in this Project.

a. Retain or "Manufacturers' Certified Data" or "Testing Agency Certified Data" Subparagraph below. Retain first subparagraph if photometric data, based on testing by accredited manufacturers' laboratories, is considered adequate for luminaires in this Project. Retain second subparagraph if photometric data for one or more luminaires are based on independent laboratory tests; coordinate with the Interior Lighting Fixture Schedule on Drawings to indicate which units shall meet this requirement. See the Evaluations. Manufacturers' Certified Data: Photometric data certified by manufacturer's laboratory with a current accreditation under the National Voluntary Laboratory Accreditation Program (NVLAP) for Energy Efficient Lighting Products.
b. Testing Agency Certified Data: For indicated luminaires, photometric data certified by a qualified independent testing agency. Photometric data for remaining luminaires shall be certified by manufacturer.

B. Shop Drawings: For nonstandard or custom luminaires.

1. Include plans, elevations, sections, and mounting and attachment details.
2. Include details of luminaire assemblies. Indicate dimensions, weights, loads, required clearances, method of field assembly, components, and location and size of each field connection.
3. Include diagrams for power, signal, and control wiring.

C. Samples: For each luminaire and for each color and texture indicated with standard factory-applied finish.

D. Samples for Initial Selection: For each type of luminaire with custom factory-applied finishes.

1. Include Samples of luminaires and accessories involving color and finish selection.

E. Samples for Verification: For each type of luminaire.

1. Include Samples of luminaires and accessories to verify finish selection.
2. Lamps and ballasts, installed.
3. Pendant support system.

F. Product Schedule: For luminaires and lamps. Use same designations indicated on Drawings**.**

1.5 INFORMATIONAL SUBMITTALS

A. Coordination Drawings: Reflected ceiling plan(s) and other details, drawn to scale, on which the following items are shown and coordinated with each other, using input from installers of the items involved:

1. Luminaires.
2. Suspended ceiling components.
3. Partitions and millwork that penetrate the ceiling or extend to within 12 inches (300 mm) of the plane of the luminaires.

Copyright 2014 AIA MasterSpec Premium

4. Structural members to which luminaires will be attached.
5. Initial access modules for acoustical tile.
6. Items penetrating finished ceiling, including the following:

    a. Other luminaires.
    b. Air outlets and inlets.
    c. Speakers.
    d. Sprinklers.
    e. Access panels.
    f. Ceiling mounted projectors.

7. Moldings.

B. Qualification Data: For testing laboratory providing photometric data for luminaires.

C. Product Certificates: For each type of ballast for bi-level and dimmer-controlled luminaires, from manufacturer.

D. Product Test Reports: For each luminaire, for tests performed by a qualified testing agency.

E. Sample warranty.

F. Seismic Qualification Certificates: For luminaires, accessories, and components, from manufacturer.

1. Basis for Certification: Indicate whether withstand certification is based on actual test of assembled components or on calculation.
2. Dimensioned Outline Drawings of Equipment Unit: Identify center of gravity and locate and describe mounting and anchorage provisions.
3. Detailed description of equipment anchorage devices on which the certification is based and their installation requirements.

1.6 CLOSEOUT SUBMITTALS

A. Operation and Maintenance Data: For luminaires and lighting systems to include in maintenance manuals.

1. Provide a list of all lamp types used on Project; use ANSI and manufacturers' codes.

1.7 MAINTENANCE MATERIAL SUBMITTALS

A. Furnish extra materials that match products installed and that are packaged with protective covering for storage and identified with labels describing contents.

1. Lamps: Ten for every 2 of each type and rating installed.
2. Diffusers and Lenses: One for every 100 of each type and rating installed. Furnish at least one of each type.
3. Fluorescent-luminaire-mounted emergency battery pack: One for every emergency lighting unit.

Copyright 2014 AIA MasterSpec Premium

4. Globes and Guards: One for every 20 of each type and rating installed. Furnish at least one of each type.

1.8 QUALITY ASSURANCE

A. Luminaire Photometric Data Testing Laboratory Qualifications: Luminaire manufacturer's laboratory is accredited under the NVLAP for Energy Efficient Lighting Products.

B. Luminaire Photometric Data Testing Laboratory Qualifications: Provided by an independent agency, with the experience and capability to conduct the testing indicated, that is an NRTL as defined by OSHA in 29 CFR 1910.7, accredited under the NVLAP for Energy Efficient Lighting Products, and complying with the applicable IES testing standards.

C. Mockups: For interior luminaires in room or module mockups, complete with power and control connections.

1. Obtain Architect's approval of luminaires in mockups before starting installations.
2. Maintain mockups during construction in an undisturbed condition as a standard for judging the completed Work.
3. Approval of mockups does not constitute approval of deviations from the Contract Documents contained in mockups unless Architect specifically approves such deviations in writing.
4. Subject to compliance with requirements, approved mockups may become part of the completed Work if undisturbed at time of Substantial Completion.

1.9 DELIVERY, STORAGE, AND HANDLING

A. Protect finishes of exposed surfaces by applying a strippable, temporary protective covering before shipping.

1.10 WARRANTY

A. Warranty: Manufacturer and Installer agree to repair or replace components of luminaires that fail in materials or workmanship within specified warranty period.

1. Warranty Period: Two year(s) from date of Substantial Completion.

PART 2 - PRODUCTS

2.1 PERFORMANCE REQUIREMENTS

A. Seismic Performance: Luminaires shall withstand the effects of earthquake motions determined according to ASCE/SEI 7.

B. Seismic Performance: Luminaires and lamps shall be labeled vibration and shock resistant.

Copyright 2014 AIA MasterSpec Premium

1. The term "withstand" means "the luminaire will remain in place without separation of any parts when subjected to the seismic forces specified and the luminaire will be fully operational during and after the seismic event."

2.2 LUMINAIRE REQUIREMENTS

A. Electrical Components, Devices, and Accessories: Listed and labeled as defined in NFPA 70, by a qualified testing agency, and marked for intended location and application.

B. NRTL Compliance: Luminaires for hazardous locations shall be listed and labeled for indicated class and division of hazard by an NRTL.

C. FM Global Compliance: Luminaires for hazardous locations shall be listed and labeled for indicated class and division of hazard by FM Global.

D. UL Compliance: Comply with UL 1598.

E. Nominal Operating Voltage: 120 V ac.

F. Recessed Luminaires: Comply with NEMA LE 4.

G. EMI Filters: Factory installed to suppress conducted EMI according to MIL-STD-461E. Fabricate luminaires with one filter on each ballast indicated to require a filter.

H. Air-Handling Fluorescent Luminaires: For use with plenum ceiling for air return and heat extraction and for attaching an air-diffuser-boot assembly specified in Section 233713 "Diffusers, Registers, and Grilles."

1. Air-Supply Units: Slots in one or both side trims join with air-diffuser-boot assemblies.
2. Heat-Removal Units: Air path leads through lamp cavity.
3. Combination Heat-Removal and Air-Supply Unit: Heat is removed through lamp cavity at both ends of the luminaire door with air supply same as for air-supply units.
4. Dampers: Operable from outside luminaire for control of return-air volume.
5. Static Luminaire: Air-supply slots are blanked off, and luminaire appearance matches active units.

2.3 BALLASTS FOR LINEAR FLUORESCENT LAMPS

A. General Requirements for Electronic Ballasts:

1. Comply with UL 935 and with ANSI C82.11.
2. Designed for type and quantity of lamps served.
3. Ballasts shall be designed for full light output unless another BF, dimmer, or bi-level control is indicated.
4. Sound Rating: Class A.
5. THD Rating: Less than 10 percent.
6. Transient Voltage Protection: IEEE C62.41.1 and IEEE C62.41.2, Category A or better.
7. Operating Frequency: 42kHz or higher.
8. Lamp Current Crest Factor: 1.7or less.

Copyright 2014 AIA MasterSpec Premium

9. BF: 0.88or higher.
10. Power Factor: 0.95or higher.
11. Parallel Lamp Circuits: Multiple lamp ballasts shall comply with ANSI C82.11 and shall be connected to maintain full light output on surviving lamps if one or more lamps fail.

B. Luminaires controlled by occupancy sensors shall have programmed-start ballasts.

C. Electronic Programmed-Start Ballasts for T5Lamps: Comply with ANSI C82.11 and the following:

1. Lamp end-of-life detection and shutdown circuit for T5 diameter lamps.
2. Automatic lamp starting after lamp replacement.

D. Electromagnetic Ballasts: Comply with ANSI C82.11; energy saving, high-power factor, Class P, and having automatic-reset thermal protection.

1. Ballast Manufacturer Certification: Indicated by label.

E. Single Ballasts for Multiple Luminaires: Factory wired with ballast arrangements and bundled extension wiring to suit final installation conditions without modification or rewiring in the field.

F. Ballasts for Residential Applications: Luminaires designated as "residential" may use low-power-factor electronic ballasts having a Class B sound rating and THD of approximately 30 percent.

G. Ballasts for Low-EMI Environments: Comply with 47 CFR 18, Ch. 1, Subpart C, for limitations on EMI and RFI for consumer equipment.

2.4 EMERGENCY FLUORESCENT POWER UNIT

A. Internal Type: Self-contained, modular, battery-inverter unit, factory mounted within luminaire body and compatible with ballast. Comply with UL 924.

1. Emergency Connection: Operate one fluorescent lamp(s) continuously at an output of 1100 lumens each. Connect unswitched circuit to battery-inverter unit and switched circuit to luminaire ballast.
2. Nightlight Connection: Operate one fluorescent lamp continuously.
3. Test Push Button and Indicator Light: Visible and accessible without opening luminaire or entering ceiling space.

   a. Push Button: Push-to-test type, in unit housing, simulates loss of normal power and demonstrates unit operability.
   b. Indicator Light: LED indicates normal power on. Normal glow indicates trickle charge; bright glow indicates charging at end of discharge cycle.

4. Battery: Sealed, maintenance-free, nickel-cadmium type.
5. Charger: Fully automatic, solid-state, constant-current type with sealed power transfer relay.

Copyright 2014 AIA MasterSpec Premium

6. Remote Test: Switch in hand-held remote device aimed in direction of tested unit initiates coded infrared signal. Signal reception by factory-installed infrared receiver in tested unit triggers simulation of loss of its normal power supply, providing visual confirmation of either proper or failed emergency response.
7. Integral Self-Test: Factory-installed electronic device automatically initiates code-required test of unit emergency operation at required intervals. Test failure is annunciated by an integral audible alarm and a flashing red LED.

B. External Type: Self-contained, modular, battery-inverter unit, suitable for powering one or more fluorescent lamps, remote mounted from luminaire. Comply with UL 924.

1. Emergency Connection: Operate one fluorescent lamp continuously. Connect unswitched circuit to battery-inverter unit and switched circuit to luminaire ballast.
2. Nightlight Connection: Operate one fluorescent lamp in a remote luminaire continuously.
3. Battery: Sealed, maintenance-free, nickel-cadmium type.
4. Charger: Fully automatic, solid-state, constant-current type.
5. Housing: NEMA 250, Type 1 enclosure.
6. Test Push Button: Push-to-test type, in unit housing, simulates loss of normal power and demonstrates unit operability.
7. LED Indicator Light: Indicates normal power on. Normal glow indicates trickle charge; bright glow indicates charging at end of discharge cycle.
8. Remote Test: Switch in hand-held remote device aimed in direction of tested unit initiates coded infrared signal. Signal reception by factory-installed infrared receiver in tested unit triggers simulation of loss of its normal power supply, providing visual confirmation of either proper or failed emergency response.
9. Integral Self-Test: Factory-installed electronic device automatically initiates code-required test of unit emergency operation at required intervals. Test failure is annunciated by an integral audible alarm and a flashing red LED.

2.5 MATERIALS

A. Metal Parts:

1. Free of burrs and sharp corners and edges.
2. Sheet metal components shall be steel unless otherwise indicated.
3. Form and support to prevent warping and sagging.

B. Doors, Frames, and Other Internal Access: Smooth operating, free of light leakage under operating conditions, and designed to permit relamping without use of tools. Designed to prevent doors, frames, lenses, diffusers, and other components from falling accidentally during relamping and when secured in operating position.

C. Diffusers and Globes:

1. Clear, UV-stabilized acrylic.
2. Acrylic Diffusers: One hundred percent virgin acrylic plastic, with high resistance to yellowing and other changes due to aging, exposure to heat, and UV radiation.
3. Lens Thickness: At least 0.125 inch (3.175 mm) minimum unless otherwise indicated.

D. Housings:

Copyright 2014 AIA MasterSpec Premium

1. Extruded-aluminum housing and heat sink.
2. Powder-coat White finish.

E. Factory-Applied Labels: Comply with UL 1598. Include recommended lamps. Locate labels where they will be readily visible to service personnel, but not seen from normal viewing angles when lamps are in place.

1. Label shall include the following lamp characteristics:

a. "USE ONLY" and include specific lamp type.
b. Lamp diameter, shape, size, wattage, and coating.
c. CCT and CRI for all luminaires.

2.6 METAL FINISHES

A. Variations in finishes are unacceptable in the same piece. Variations in finishes of adjoining components are acceptable if they are within the range of approved Samples and if they can be and are assembled or installed to minimize contrast.

2.7 LUMINAIRE SUPPORT COMPONENTS

A. Comply with requirements in Section 260529 "Hangers and Supports for Electrical Systems" for channel and angle iron supports and nonmetallic channel and angle supports.

B. Single-Stem Hangers: 1/2-inch (13-mm) steel tubing with swivel ball fittings and ceiling canopy. Finish shall match luminaire.

C. Wires: ASTM A 641/A 641M, Class 3, soft temper, zinc-coated steel, **12 gage (2.68 mm)**.

D. Rod Hangers: 3/16-inch (5-mm) minimum diameter, cadmium-plated, threaded steel rod.

E. Hook Hangers: Integrated assembly matched to luminaire, line voltage, and equipment with threaded attachment, cord, and locking-type plug.

PART 3 - EXECUTION

3.1 EXAMINATION

A. Examine substrates, areas, and conditions, with Installer present, for compliance with requirements for installation tolerances and other conditions affecting performance of the Work.

B. Examine roughing-in for luminaire to verify actual locations of luminaire and electrical connections before fixture installation.

C. Proceed with installation only after unsatisfactory conditions have been corrected.

Copyright 2014 AIA MasterSpec Premium

3.2 TEMPORARY LIGHTING

A. If approved by the Architect, use selected permanent luminaires for temporary lighting. When construction is sufficiently complete, clean luminaires used for temporary lighting and install new lamps.

3.3 INSTALLATION

A. Comply with NECA 1.

B. Remote Mounting of Ballasts: Distance between the ballast and luminaire shall not exceed that recommended by ballast manufacturer. Verify, with ballast manufacturers, maximum distance between ballast and luminaire.

C. Install luminaires level, plumb, and square with ceilings and walls unless otherwise indicated.

D. Install lamps in each luminaire.

E. Coordinate layout and installation of luminaires and suspension system with other construction that penetrates ceilings or is supported by them.

F. Supports:

1. Sized and rated for luminaire weight.
2. Able to maintain luminaire position after cleaning and relamping.
3. Provide support for luminaire without causing deflection of ceiling or wall.
4. Luminaire mounting devices shall be capable of supporting a horizontal force of 100 percent of luminaire weight and vertical force of 400 percent of luminaire weight.

G. Ceiling-Grid-Mounted Luminaire Supports: Use grid as a support element.

1. Install ceiling support system rods or wires, independent of the ceiling suspension devices, for each luminaire. Locate not more than 6 inches (150 mm) from luminaire corners.
2. Support Clips: Fasten to luminaires and to ceiling grid members at or near each luminaire corner with clips that are UL listed for the application.
3. Luminaires of Sizes Less Than Ceiling Grid: Install as indicated on reflected ceiling plans or center in acoustical panel, and support luminaires independently with at least two 3/4-inch (20-mm) metal channels spanning and secured to ceiling tees.
4. Install at least one independent support rod or wire from structure to a tab on luminaire. Wire or rod shall have breaking strength of the luminaire weight at a safety factor of 3.

H. Flush-Mounted Luminaire Support:

1. Secured to outlet box.
2. Attached to ceiling structural members at four points equally spaced around circumference of luminaire.
3. Trim ring flush with finished surface.

I. Wall-Mounted Luminaire Support:

Copyright 2014 AIA MasterSpec Premium

1. Attached to structural members in walls.
2. Do not attach luminaires directly to gypsum board.

J. Suspended Luminaire Support:

1. Pendants and Rods: Where longer than 48 inches (1200 mm), brace to limit swinging.
2. Stem-Mounted, Single-Unit Luminaires: Suspend with twin-stem hangers. Support with approved outlet box and accessories that hold stem and provide damping of luminaire oscillations. Support outlet box vertically to building structure using approved devices.
3. Continuous Rows of Luminaires: Use tubing or stem for wiring at one point and tubing or rod for suspension for each unit length of luminaire chassis, including one at each end.
4. Do not use ceiling grid as support for pendant luminaires. Connect support wires or rods to building structure.

K. Comply with requirements in Section 260519 "Low-Voltage Electrical Power Conductors and Cables" and Section 260533 "Raceways and Boxes for Electrical Systems" for wiring connections and wiring methods.

3.4 IDENTIFICATION

A. Identify system components, wiring, cabling, and terminals. Comply with requirements for identification specified in Section 260553 "Identification for Electrical Systems."

3.5 FIELD QUALITY CONTROL

A. Perform the following tests and inspections:

B. Operational Test: After installing luminaires, switches, and accessories, and after electrical circuitry has been energized, test units to confirm proper operation.

1. Test for Emergency Lighting: Interrupt power supply to demonstrate proper operation. Verify transfer from normal power to battery power and retransfer to normal.

C. Luminaire will be considered defective if it does not pass operation tests and inspections.

D. Prepare test and inspection reports.

3.6 ADJUSTING

A. Occupancy Adjustments: When requested within 12 months of date of Substantial Completion, provide on-site assistance in adjusting the direction of aim of luminaires to suit occupied conditions. Make up to two visits to Project during other-than-normal hours for this purpose. Some of this work may be required during hours of darkness.

1. During adjustment visits, inspect all luminaires. Replace lamps or luminaires that are defective.
2. Parts and supplies shall be manufacturer's authorized replacement parts and supplies.
3. Adjust the aim of luminaires in the presence of the Architect.

Copyright 2014 AIA MasterSpec Premium

END OF SECTION 265116

Copyright 2014 AIA MasterSpec Premium

SECTION 265219 - EMERGENCY AND EXIT LIGHTING

PART 1 - GENERAL

1.1 RELATED DOCUMENTS

A. Drawings and general provisions of the Contract, including General and Supplementary Conditions and Division 01 Specification Sections, apply to this Section.

1.2 SUMMARY

A. Section Includes:

1. Emergency lighting units.
2. Exit signs.
3. Luminaire supports.

1.3 DEFINITIONS

A. CCT: Correlated color temperature.

B. CRI: Color Rendering Index.

C. Emergency Lighting Unit: A lighting unit with internal or external emergency battery powered supply and the means for controlling and charging the battery and unit operation.

D. Fixture: See "Luminaire" Paragraph.

E. Lumen: Measured output of lamp and luminaire, or both.

F. Luminaire: Complete lighting unit, including lamp, reflector, and housing.

1.4 ACTION SUBMITTALS

A. Product Data: For each type of emergency lighting unit, exit sign, and emergency lighting support.

1. Include data on features, accessories, and finishes.
2. Include physical description of the unit and dimensions.
3. Battery and charger for light units.
4. Include life, output of luminaire (lumens, CCT, and CRI), and energy-efficiency data.
5. Include photometric data and adjustment factors based on laboratory tests, complying with IES LM-45, for each luminaire type.

Copyright 2014 AIA MasterSpec Premium

a. Testing Agency Certified Data: For indicated luminaires and signs, photometric data certified by a qualified independent testing agency. Photometric data for remaining luminaires and signs shall be certified by manufacturer.
b. Manufacturers' Certified Data: Photometric data certified by manufacturer's laboratory with a current accreditation under the National Voluntary Laboratory Accreditation Program for Energy Efficient Lighting Products.

B. Shop Drawings: For nonstandard or custom luminaires.

1. Include plans, elevations, sections, and mounting and attachment details.
2. Include details of equipment assemblies. Indicate dimensions, weights, loads, required clearances, method of field assembly, components, and location and size of each field connection.
3. Include diagrams for power, signal, and control wiring.

C. Sustainable Design Submittals:

D. Samples: For each product and for each color and texture specified.

E. Samples for Initial Selection: For each type of luminaire with factory-applied finishes.

F. Samples for Verification: For each type of luminaire.

1. Include Samples of luminaires and accessories to verify finish selection.

G. Product Schedule:

1. For emergency lighting units.
2. For exit signs.

1.5 INFORMATIONAL SUBMITTALS

A. Coordination Drawings: Reflected ceiling plan(s) and other details, drawn to scale, on which the following items are shown and coordinated with each other, using input from installers of the items involved:

1. Luminaires.
2. Suspended ceiling components.
3. Partitions and millwork that penetrate the ceiling or extend to within 12 inches (300 mm) of the plane of the luminaires.
4. Structural members to which equipment will be attached.
5. Size and location of initial access modules for acoustical tile.
6. Items penetrating finished ceiling including the following:

a. Other luminaires.
b. Air outlets and inlets.
c. Speakers.
d. Ceiling-mounted projectors.
e. Sprinklers.
f. Access panels.

Copyright 2014 AIA MasterSpec Premium

7. Moldings.

B. Qualification Data: For testing laboratory providing photometric data for luminaires.

C. Product Certificates: For each type of luminaire.

D. Seismic Qualification Certificates: For luminaires, accessories, and components, from manufacturer.

1. Basis for Certification: Indicate whether withstand certification is based on actual test of assembled components or on calculation.
2. Dimensioned Outline Drawings of Equipment Unit: Identify center of gravity and locate and describe mounting and anchorage provisions.
3. Detailed description of equipment anchorage devices on which the certification is based and their installation requirements.

E. Product Test Reports: For each luminaire for tests performed by a qualified testing agency.

F. Sample Warranty: For manufacturer's warranty.

1.6 CLOSEOUT SUBMITTALS

A. Operation and Maintenance Data: For luminaires and lighting systems to include in emergency, operation, and maintenance manuals.

1. Provide a list of all lamp types used on Project; use ANSI and manufacturers' codes.

1.7 MAINTENANCE MATERIAL SUBMITTALS

A. Furnish extra materials that match products installed and that are packaged with protective covering for storage and identified with labels describing contents.

1. Lamps: 2 of each type and rating installed.
2. Luminaire-mounted, emergency battery pack**:** Furnish at least one of each type.
3. Diffusers and Lenses: Furnish at least one of each type.
4. Globes and Guards: Furnish at least one of each type.

1.8 QUALITY ASSURANCE

A. Luminaire Photometric Data Testing Laboratory Qualifications: Luminaire manufacturer's laboratory that is accredited under the National Volunteer Laboratory Accreditation Program for Energy Efficient Lighting Products.

B. Luminaire Photometric Data Testing Laboratory Qualifications: Provided by an independent agency, with the experience and capability to conduct the testing indicated, that is an NRTL as defined by OSHA in 29 CFR 1910.7, accredited under the National Volunteer Laboratory Accreditation Program for Energy Efficient Lighting Products, and complying with the applicable IES testing standards.

Copyright 2014 AIA MasterSpec Premium

C. FM Global Compliance: Luminaires for hazardous locations shall be listed and labeled for indicated class and division of hazard by FM Global.

D. Mockups: For interior luminaires in room or module mockups, complete with power and control connections.

1. Obtain Architect's approval of luminaires and signs in mockups before starting installations.
2. Maintain mockups during construction in an undisturbed condition as a standard for judging the completed Work.
3. Approval of mockups does not constitute approval of deviations from the Contract Documents contained in mockups unless Architect specifically approves such deviations in writing.
4. Subject to compliance with requirements, approved mockups may become part of the completed Work if undisturbed at time of Substantial Completion.

1.9 DELIVERY, STORAGE, AND HANDLING

A. Protect finishes of exposed surfaces by applying a strippable, temporary protective covering before shipping.

1.10 WARRANTY

A. Warranty: Manufacturer and Installer agree to repair or replace components of luminaires that fail in materials or workmanship within specified warranty period.

1. Warranty Period: Two year(s) from date of Substantial Completion.

B. Special Warranty for Emergency Lighting Batteries: Manufacturer's standard form in which manufacturer of battery-powered emergency lighting unit agrees to repair or replace components of rechargeable batteries that fail in materials or workmanship within specified warranty period.

1. Warranty Period for Emergency Power Unit Batteries: **5** years from date of Substantial Completion. Full warranty shall apply for first year and prorated warranty for the remaining four years.
2. Warranty Period for Emergency Fluorescent Ballast Batteries: Seven years from date of Substantial Completion. Full warranty shall apply for first year and prorated warranty for the remaining six years.

PART 2 - PRODUCTS

2.1 PERFORMANCE REQUIREMENTS

A. Seismic Performance: Luminaires shall withstand the effects of earthquake motions determined according to Luminaires and lamps shall be labeled vibration and shock resistant.

Copyright 2014 AIA MasterSpec Premium

1. The term "withstand" means "the luminaire will remain in place without separation of any parts when subjected to the seismic forces specified and the luminaire will be fully operational during and after the seismic event."

2.2 GENERAL REQUIREMENTS FOR EMERGENCY LIGHTING

A. Electrical Components, Devices, and Accessories: Listed and labeled as defined in NFPA 70, by a qualified testing agency, and marked for intended location and application.

B. NRTL Compliance: Fabricate and label emergency lighting units, exit signs, and batteries to comply with UL 924.

C. Comply with NFPA 70 and NFPA 101.

D. Comply with NEMA LE 4 for recessed luminaires.

E. Comply with UL 1598 for fluorescent luminaires.

F. Bulb Shape: Complying with ANSI C79.1.

G. Internal Type Emergency Power Unit: Self-contained, modular, battery-inverter unit, factory mounted within luminaire body and compatible with ballast.

1. Emergency Connection: Operate one lamp(s) continuously at an output of 1100 lumens each upon loss of normal power. Connect unswitched circuit to battery-inverter unit and switched circuit to luminaire ballast.
2. Operation: Relay automatically turns lamp on when power-supply circuit voltage drops to 80 percent of nominal voltage or below. Lamp automatically disconnects from battery when voltage approaches deep-discharge level. When normal voltage is restored, relay disconnects lamps from battery, and battery is automatically recharged and floated on charger.
3. Environmental Limitations: Rate equipment for continuous operation under the following conditions unless otherwise indicated:

   a. Ambient Temperature: Less than 0 deg F (minus 18 deg C) or exceeding 104 deg F (40 deg C), with an average value exceeding 95 deg F (35 deg C) over a 24-hour period.
   b. Ambient Storage Temperature: Not less than minus 4 deg F (minus 20 deg C) and not exceeding 140 deg F (60 deg C).
   c. Humidity: More than 95 percent (condensing).
   d. Altitude: Exceeding 3300 feet (1000 m).

4. Nightlight Connection: Operate lamp continuously at 40 percent of rated light output.
5. Test Push-Button and Indicator Light: Visible and accessible without opening luminaire or entering ceiling space.

   a. Push Button: Push-to-test type, in unit housing, simulates loss of normal power and demonstrates unit operability.
   b. Indicator Light: LED indicates normal power on. Normal glow indicates trickle charge; bright glow indicates charging at end of discharge cycle.

Copyright 2014 AIA MasterSpec Premium

6. Battery: Sealed, maintenance-free, nickel-cadmium type.
7. Charger: Fully automatic, solid-state, constant-current type with sealed power transfer relay.
8. Remote Test: Switch in handheld remote device aimed in direction of tested unit initiates coded infrared signal. Signal reception by factory-installed infrared receiver in tested unit triggers simulation of loss of its normal power supply, providing visual confirmation of either proper or failed emergency response.
9. Integral Self-Test: Factory-installed electronic device automatically initiates code-required test of unit emergency operation at required intervals. Test failure is annunciated by an integral audible alarm and a flashing red LED.

2.3 EMERGENCY LIGHTING

A. General Requirements for Emergency Lighting Units: Self-contained units.

B. Emergency Luminaires:
1. Emergency Luminaires: as indicated on Drawings, with the following additional features:

   a. Operating at nominal voltage of 120 V ac.
   b. Internal emergency power unit.
   c. Rated for installation in damp locations, and for sealed and gasketed luminaires in wet locations.
   d. UL 94 flame rating.

C. Emergency Lighting Unit:
1. Emergency Lighting Unit: Drawings.
2. Operating at nominal voltage of 120 V ac.
3. Wall with universal junction box adaptor.
4. UV stable thermoplastic housing.
5. Two LED lamp heads.
6. Internal emergency power unit.

2.4 EXIT SIGNS

A. General Requirements for Exit Signs: Comply with UL 924; for sign colors, visibility, luminance, and lettering size, comply with authorities having jurisdiction.

B. Internally Lighted Signs:
1. Operating at nominal voltage of 120 V ac.
2. LEED v4 for Healthcare MR Prerequisite "PBT Source Reduction - Mercury" does not allow use of fluorescent lamps. Lamps for AC Operation: Fluorescent, two for each luminaire; 20,000 hours of rated lamp life.
3. Lamps for AC Operation: LEDs; 50,000 hours minimum rated lamp life.
4. Self-Powered Exit Signs (Battery Type): Internal emergency power unit.

2.5 MATERIALS

A. Metal Parts:

Copyright 2014 AIA MasterSpec Premium

1. Free of burrs and sharp corners and edges.
2. Sheet metal components shall be steel unless otherwise indicated.
3. Form and support to prevent warping and sagging.

B. Doors, Frames, and Other Internal Access:

1. Smooth operating, free of light leakage under operating conditions.
2. Designed to permit relamping without use of tools.
3. Designed to prevent doors, frames, lenses, diffusers, and other components from falling accidentally during relamping and when secured in operating position.

C. Diffusers and Globes:

1. Clear, UV-stabilized acrylic.
2. Glass: Annealed crystal glass unless otherwise indicated.
3. Acrylic: 100 percent virgin acrylic plastic, with high resistance to yellowing and other changes due to aging, exposure to heat, and UV radiation.
4. Lens Thickness: At least 0.125 inch (3.175 mm) minimum unless otherwise indicated.

D. Housings:

1. Extruded aluminum.
2. Powder coat finish.

E. Conduit: Electrical metallic tubing, minimum 3/4 inch (21 mm) in diameter.

2.6 METAL FINISHES

A. Appearance of Finished Work: Noticeable variations in same piece are not acceptable. Variations in appearance of adjoining components are acceptable if they are within the range of approved Samples and are assembled or installed to minimize contrast.

2.7 LUMINAIRE SUPPORT COMPONENTS

A. Comply with requirements in Section 260529 "Hangers and Supports for Electrical Systems" for channel and angle iron supports and nonmetallic channel and angle supports.

B. Support Wires: ASTM A 641/A 641M, Class 3, soft temper, zinc-coated steel, 12 gage (2.68 mm).

PART 3 - EXECUTION

3.1 EXAMINATION

A. Examine substrates, areas, and conditions, with Installer present, for compliance with requirements for conditions affecting performance of luminaires.

Copyright 2014 AIA MasterSpec Premium

B. Examine roughing-in for luminaire to verify actual locations of luminaire and electrical connections before luminaire installation.

C. Examine walls, floors, roofs, and ceilings for suitable conditions where emergency lighting luminaires will be installed.

D. Proceed with installation only after unsatisfactory conditions have been corrected.

3.2 INSTALLATION

A. Comply with NECA 1.

B. Install luminaires level, plumb, and square with ceilings and walls unless otherwise indicated.

C. Install lamps in each luminaire.

D. Supports:

1. Sized and rated for luminaire weight.
2. Able to maintain luminaire position when testing emergency power unit.
3. Provide support for luminaire and emergency power unit without causing deflection of ceiling or wall.
4. Luminaire-mounting devices shall be capable of supporting a horizontal force of 100 percent of luminaire and emergency power unit weight and vertical force of 400 percent of luminaire weight.

E. Wall-Mounted Luminaire Support:

1. Attached to structural members in walls.
2. Do not attach luminaires directly to gypsum board.

F. Suspended Luminaire Support:

1. Pendants and Rods: Where longer than 48 inches (1200 mm), brace to limit swinging.
2. Stem-Mounted, Single-Unit Luminaires: Suspend with twin-stem hangers. Support with approved outlet box and accessories that hold stem and provide damping of luminaire oscillations. Support outlet box vertically to building structure using approved devices.
3. Continuous Rows of Luminaires: Use tubing or stem for wiring at one point and tubing or rod for suspension for each unit length of luminaire chassis, including one at each end.
4. Do not use ceiling grid as support for pendant luminaires. Connect support wires or rods to building structure.

G. Ceiling Grid Mounted Luminaires:

1. Secure to any required outlet box.
2. Secure emergency power unit using approved fasteners in a minimum of four locations, spaced near corners of emergency power unit.
3. Use approved devices and support components to connect luminaire to ceiling grid and building structure in a minimum of four locations, spaced near corners of luminaire.

Copyright 2014 AIA MasterSpec Premium

3.3 IDENTIFICATION

A. Identify system components, wiring, cabling, and terminals. Comply with requirements for identification specified in Section 260553 "Identification for Electrical Systems."

3.4 FIELD QUALITY CONTROL

A. Perform the following tests and inspections:

1. Test for Emergency Lighting: Interrupt power supply to demonstrate proper operation. Verify transfer from normal power to battery power and retransfer to normal.

B. Luminaire will be considered defective if it does not pass operation tests and inspections.

C. Prepare test and inspection reports.

3.5 STARTUP SERVICE

A. Perform startup service:

1. Charge emergency power units minimum of one hour and depress switch to conduct short-duration test.
2. Charge emergency power units minimum of 24 hours and conduct one-hour discharge test.

3.6 ADJUSTING

A. Adjustments: Within 12 months of date of Substantial Completion, provide on-site visit to do the following:

1. Inspect all luminaires. Replace lamps, emergency power units, batteries, signs, or luminaires that are defective.

a. Parts and supplies shall be manufacturer's authorized replacement parts and supplies.

2. Conduct short-duration tests on all emergency lighting.

END OF SECTION 265219

Copyright 2014 AIA MasterSpec Premium

SECTION 271500 - COMMUNICATIONS HORIZONTAL CABLING

PART 1 - GENERAL

1.1 RELATED DOCUMENTS

A. Drawings and general provisions of the Contract, including General and Supplementary Conditions and Division 01 Specification Sections, apply to this Section.

1.2 SUMMARY

A. Section Includes:

1. UTP cabling.
2. Cable connecting hardware, patch panels, and cross-connects.
3. Telecommunications outlet/connectors.
4. Cabling system identification products.

1.3 DEFINITIONS

A. BICSI: Building Industry Consulting Service International.

B. Consolidation Point: A location for interconnection between horizontal cables extending from building pathways and horizontal cables extending into furniture pathways.

C. Cross-Connect: A facility enabling the termination of cable elements and their interconnection or cross-connection.

D. EMI: Electromagnetic interference.

E. IDC: Insulation displacement connector.

F. LAN: Local area network.

G. MUTOA: Multiuser telecommunications outlet assembly, a grouping in one location of several telecommunications outlet/connectors.

H. Outlet/Connectors: A connecting device in the work area on which horizontal cable or outlet cable terminates.

I. RCDD: Registered Communications Distribution Designer.

J. UTP: Unshielded twisted pair.

Copyright 2014 AIA MasterSpec Premium

1.4 ADMINISTRATIVE REQUIREMENTS

A. Coordinate layout and installation of telecommunications cabling with Owner's telecommunications and LAN equipment and service suppliers.

B. Coordinate telecommunications outlet/connector locations with location of power receptacles at each work area.

1.5 ACTION SUBMITTALS

A. Shop Drawings:

1. System Labeling Schedules: Electronic copy of labeling schedules, in software and format selected by Owner.
2. System Labeling Schedules: Electronic copy of labeling schedules that are part of the cabling and asset identification system of the software.
3. Cabling administration drawings and printouts.
4. Wiring diagrams to show typical wiring schematics, including the following:

   a. Cross-connects.
   b. Patch panels.
   c. Patch cords.

Cross-connects and patch panels. Detail mounting assemblies, and show elevations and physical relationship between the installed components.

1.6 INFORMATIONAL SUBMITTALS

A. Qualification Data: For Installer, qualified layout technician, installation supervisor, and field inspector.

B. Source quality-control reports.

C. Field quality-control reports.

1.7 CLOSEOUT SUBMITTALS

A. Maintenance Data: For splices and connectors to include in maintenance manuals.

B. Software and Firmware Operational Documentation:

1. Software operating and upgrade manuals.
2. Program Software Backup: On magnetic media or compact disk, complete with data files.
3. Device address list.
4. Printout of software application and graphic screens.

Copyright 2014 AIA MasterSpec Premium

1.8 MAINTENANCE MATERIAL SUBMITTALS

A. Furnish extra materials that match products installed and that are packaged with protective covering for storage and identified with labels describing contents.

1. Patch-Panel Units: One of each type.
2. Connecting Blocks: One of each type.
3. Device Plates: One of each type.

1.9 QUALITY ASSURANCE

A. Installer Qualifications: Cabling Installer must have personnel certified by BICSI on staff.

1. Layout Responsibility: Preparation of Shop Drawings and Cabling Administration Drawings by an RCDD.
2. Installation Supervision: Installation shall be under the direct supervision of Registered Technician, who shall be present at all times when Work of this Section is performed at Project site.
3. Testing Supervisor: Currently certified by BICSI as an RCDD to supervise on-site testing.

B. Testing Agency Qualifications: An NRTL.

1. Testing Agency's Field Supervisor: Currently certified by BICSI as an RCDD to supervise on-site testing.

1.10 DELIVERY, STORAGE, AND HANDLING

A. Test cables upon receipt at Project site.
1. Test each pair of UTP cable for open and short circuits.

PART 2 - PRODUCTS

2.1 HORIZONTAL CABLING DESCRIPTION

A. Horizontal cable and its connecting hardware provide the means of transporting signals between the telecommunications outlet/connector and the horizontal cross-connect located in the communications equipment room. This cabling and its connecting hardware are called a "permanent link," a term that is used in the testing protocols.

1. TIA/EIA-568-B.1 requires that a minimum of two telecommunications outlet/connectors be installed for each work area.
2. Horizontal cabling shall contain no more than one transition point or consolidation point between the horizontal cross-connect and the telecommunications outlet/connector.
3. Bridged taps and splices shall not be installed in the horizontal cabling.

B. A work area is approximately 100 sq. ft. (9.3 sq. m), and includes the components that extend from the telecommunications outlet/connectors to the station equipment.

Copyright 2014 AIA MasterSpec Premium

C. The maximum allowable horizontal cable length is 295 feet (90 m). This maximum allowable length does not include an allowance for the length of 16 feet (4.9 m) to the workstation equipment or in the horizontal cross-connect.

2.2 PERFORMANCE REQUIREMENTS

A. General Performance: Horizontal cabling system shall comply with transmission standards in TIA/EIA-568-B.1 when tested according to test procedures of this standard.

B. Surface-Burning Characteristics: Comply with ASTM E 84; testing by a qualified testing agency. Identify products with appropriate markings of applicable testing agency.

1. Flame-Spread Index: 25 or less.
2. Smoke-Developed Index: 50 or less.

C. Electrical Components, Devices, and Accessories: Listed and labeled as defined in NFPA 70, by a qualified testing agency, and marked for intended location and application.

D. Grounding: Comply with J-STD-607-A.

2.3 BACKBOARDS

A. Backboards: Plywood, fire-retardant treated**,** 3/4 by 48 by 96 inches (19 by 1220 by 2440 mm). Comply with requirements in Section 061000 "Rough Carpentry" for plywood backing panels.

2.4 UTP CABLE

A. Description: 100-ohm, four-pair UTP, formed into 25-pair, binder groups covered with a blue thermoplastic jacket.

1. Comply with ICEA S-90-661 for mechanical properties.
2. Comply with TIA/EIA-568-B.1 for performance specifications.
3. Comply with TIA/EIA-568-B.2, Category 5e, Category 6.
4. Listed and labeled by an NRTL acceptable to authorities having jurisdiction as complying with UL 444 and NFPA 70 for the following types:

   a. Communications, General Purpose: Type CM or CMG.
   b. Communications, Plenum Rated: Type CMP complying with NFPA 262.
   c. Communications, Riser Rated: Type CMR complying with UL 1666.
   d. Communications, Limited Purpose: Type CMX
   e. Multipurpose: Type MP or MPG.
   f. Multipurpose, Plenum Rated: Type MPP, complying with NFPA 262.
   g. Multipurpose, Riser Rated: Type MPR, complying with UL 1666.

Copyright 2014 AIA MasterSpec Premium

2.5 UTP CABLE HARDWARE

A. General Requirements for Cable Connecting Hardware: Comply with TIA/EIA-568-B.2, IDC type, with modules designed for punch-down caps or tools. Cables shall be terminated with connecting hardware of same category or higher.

B. Connecting Blocks: 110-style IDC for Category 6. Provide blocks for the number of cables terminated on the block, plus **25**percent spare. Integral with connector bodies, including plugs and jacks where indicated.

C. Cross-Connect: Modular array of connecting blocks arranged to terminate building cables and permit interconnection between cables.

1. Number of Terminals per Field: One for each conductor in assigned cables.

D. Patch Panel: Modular panels housing multiple-numbered jack units with IDC-type connectors at each jack for permanent termination of pair groups of installed cables.

1. Number of Jacks per Field: One for each four-pair conductor group of indicated cables, plus spares and blank positions adequate to suit specified expansion criteria.

E. Jacks and Jack Assemblies: Modular, color-coded, eight-position modular receptacle units with integral IDC-type terminals.

2.6 TELECOMMUNICATIONS OUTLET/CONNECTORS

A. Jacks: 100-ohm, balanced, twisted-pair connector; four-pair, eight-position modular. Comply with TIA/EIA-568-B.1.

B. Workstation Outlets: Four port-connector assemblies mounted in multigang faceplate.

1. Plastic Faceplate: High-impact plastic. Coordinate color with Section 262726 "Wiring Devices."
2. Metal Faceplate: Stainless steel, complying with requirements in Section 262726 "Wiring Devices."
3. For use with snap-in jacks accommodating any combination of UTP, optical fiber, and coaxial work area cords.

   a. Flush mounting jacks, positioning the cord at a 45-degree angle.
4. Legend: Machine printed, in the field, using adhesive-tape label.

2.7 GROUNDING

A. Comply with requirements in Section 270526 "Grounding and Bonding for Communications Systems" for grounding conductors and connectors.

B. Comply with J-STD-607-A.

Copyright 2014 AIA MasterSpec Premium

2.8 IDENTIFICATION PRODUCTS

A. Comply with TIA/EIA-606-A and UL 969 for labeling materials, including label stocks, laminating adhesives, and inks used by label printers.

2.9 SOURCE QUALITY CONTROL

A. Testing Agency: Engage a qualified testing agency to evaluate cables.

B. Factory test UTP and optical fiber cables on reels according to TIA/EIA-568-B.1.

C. Factory test UTP cables according to TIA/EIA-568-B.2.

D. Factory test multimode optical fiber cables according to TIA-526-14-A and TIA/EIA-568-B.3.

E. Factory-sweep test coaxial cables at frequencies from 5 MHz to 1 GHz. Sweep test shall test the frequency response, or attenuation over frequency, of a cable by generating a voltage whose frequency is varied through the specified frequency range and graphing the results.

F. Cable will be considered defective if it does not pass tests and inspections.

G. Prepare test and inspection reports.

PART 3 - EXECUTION

3.1 ENTRANCE FACILITIES

A. Coordinate backbone cabling with the protectors and demarcation point provided by communications service provider.

3.2 WIRING METHODS

A. Install cables in pathways and cable trays except within consoles, cabinets, desks, and counters. Conceal pathways and cables except in unfinished spaces.

1. Install plenum cable in environmental air spaces, including plenum ceilings.

B. Conceal conductors and cables in accessible ceilings, walls, and floors where possible.

C. Wiring within Enclosures:

1. Bundle, lace, and train conductors to terminal points with no excess and without exceeding manufacturer's limitations on bending radii.
2. Install lacing bars and distribution spools.
3. Install conductors parallel with or at right angles to sides and back of enclosure.

Copyright 2014 AIA MasterSpec Premium

3.3 INSTALLATION OF CABLES

A. Comply with NECA 1.

B. General Requirements for Cabling:

1. Comply with TIA/EIA-568-B.1.
2. Comply with BICSI ITSIM, Ch. 6, "Cable Termination Practices."
3. Install 110-style IDC termination hardware unless otherwise indicated.
4. MUTOA shall not be used as a cross-connect point.
5. Consolidation points may be used only for making a direct connection to telecommunications outlet/connectors:

   a. Do not use consolidation point as a cross-connect point, as a patch connection, or for direct connection to workstation equipment.
   b. Locate consolidation points for UTP at least 49 feet (15 m) from communications equipment room.

6. Terminate conductors; no cable shall contain unterminated elements. Make terminations only at indicated outlets, terminals, cross-connects, and patch panels.
7. Cables may not be spliced. Secure and support cables at intervals not exceeding 30 inches (760 mm) and not more than 6 inches (150 mm) from cabinets, boxes, fittings, outlets, racks, frames, and terminals.
8. Install lacing bars to restrain cables, to prevent straining connections, and to prevent bending cables to smaller radii than minimums recommended by manufacturer.
9. Bundle, lace, and train conductors to terminal points without exceeding manufacturer's limitations on bending radii, but not less than radii specified in BICSI ITSIM, "Cabling Termination Practices" Chapter. Install lacing bars and distribution spools.
10. Do not install bruised, kinked, scored, deformed, or abraded cable. Do not splice cable between termination, tap, or junction points. Remove and discard cable if damaged during installation and replace it with new cable.
11. Cold-Weather Installation: Bring cable to room temperature before dereeling. Heat lamps shall not be used for heating.
12. In the communications equipment room, install a 10-foot- (3-m-) long service loop on each end of cable.
13. Pulling Cable: Comply with BICSI ITSIM, Ch. 4, "Pulling Cable." Monitor cable pull tensions.

C. UTP Cable Installation:

1. Comply with TIA/EIA-568-B.2.
2. Do not untwist UTP cables more than 1/2 inch (12 mm) from the point of termination to maintain cable geometry.

D. Open-Cable Installation:

1. Install cabling with horizontal and vertical cable guides in telecommunications spaces with terminating hardware and interconnection equipment.
2. Suspend UTP cable not in a wireway or pathway a minimum of 8 inches (200 mm) above ceilings by cable supports not more than 60 inches (1524 mm) > apart.

Copyright 2014 AIA MasterSpec Premium

3. Cable shall not be run through structural members or in contact with pipes, ducts, or other potentially damaging items.

E. Group connecting hardware for cables into separate logical fields.

F. Separation from EMI Sources:

1. Comply with BICSI TDMM and TIA-569-B for separating unshielded copper voice and data communication cable from potential EMI sources, including electrical power lines and equipment.
2. Separation between open communications cables or cables in nonmetallic raceways and unshielded power conductors and electrical equipment shall be as follows:

   a. Electrical Equipment Rating Less Than 2 kVA: A minimum of 5 inches (127 mm).

3. Separation between communications cables in grounded metallic raceways and unshielded power lines or electrical equipment shall be as follows:

   a. Electrical Equipment Rating Less Than 2 kVA: A minimum of 2-1/2 inches (64 mm).

4. Separation between communications cables in grounded metallic raceways and power lines and electrical equipment located in grounded metallic conduits or enclosures shall be as follows:

   a. Electrical Equipment Rating Less Than 2 kVA: No requirement.

5. Separation between Communications Cables and Electrical Motors and Transformers, 5 kVA or HP and Larger: A minimum of 48 inches (1200 mm).
6. Separation between Communications Cables and Fluorescent Fixtures: A minimum of 5 inches (127 mm).

3.4 GROUNDING

A. Install grounding according to BICSI TDMM, "Grounding, Bonding, and Electrical Protection" Chapter.

B. Comply with J-STD-607-A.

C. Locate grounding bus bar to minimize the length of bonding conductors. Fasten to wall allowing at least 2-inch (50-mm) clearance behind the grounding bus bar. Connect grounding bus bar with a minimum No. 4 AWG grounding electrode conductor from grounding bus bar to suitable electrical building ground.

D. Bond metallic equipment to the grounding bus bar, using not smaller than No. 6 AWG equipment grounding conductor.

Copyright 2014 AIA MasterSpec Premium

3.5 IDENTIFICATION

A. Using cable management system software specified in Part 2, develop Cabling Administration Drawings for system identification, testing, and management. Use unique, alphanumeric designation for each cable and label cable, jacks, connectors, and terminals to which it connects with same designation. At completion, cable and asset management software shall reflect as-built conditions.

B. Comply with requirements in Section 099123 "Interior Painting" for painting backboards. For fire-resistant plywood, do not paint over manufacturer's label.

C. Cable Schedule: Post in prominent location in each equipment room and wiring closet. List incoming and outgoing cables and their designations, origins, and destinations. Protect with rigid frame and clear plastic cover. Furnish an electronic copy of final comprehensive schedules for Project.

D. Cable and Wire Identification:

1. Label each cable within 4 inches (100 mm) of each termination and tap, where it is accessible in a cabinet or junction or outlet box, and elsewhere as indicated.
2. Each wire connected to building-mounted devices is not required to be numbered at device if color of wire is consistent with associated wire connected and numbered within panel or cabinet.
3. Exposed Cables and Cables in Cable Trays and Wire Troughs: Label each cable at intervals not exceeding 15 feet (4.5 m).
4. Label each terminal strip and screw terminal in each cabinet, rack, or panel.

    a. Individually number wiring conductors connected to terminal strips, and identify each cable or wiring group being extended from a panel or cabinet to a building-mounted device shall be identified with name and number of particular device as shown.
    b. Label each unit and field within distribution racks and frames.

5. Identification within Connector Fields in Equipment Rooms and Wiring Closets: Label each connector and each discrete unit of cable-terminating and connecting hardware. Where similar jacks and plugs are used for both voice and data communication cabling, use a different color for jacks and plugs of each service.
6. Uniquely identify and label work area cables extending from the MUTOA to the work area. These cables may not exceed the length stated on the MUTOA label.

E. Labels shall be preprinted or computer-printed type with printing area and font color that contrasts with cable jacket color but still complies with requirements in TIA/EIA-606-A.

1. Cables use flexible vinyl or polyester that flex as cables are bent.

3.6 FIELD QUALITY CONTROL

A. Testing Agency: Engage a qualified testing agency to perform tests and inspections.

Copyright 2014 AIA MasterSpec Premium

B. Manufacturer's Field Service: Engage a factory-authorized service representative to test and inspect components, assemblies, and equipment installations, including connections.

C. Perform the following tests and inspections:

1. Visually inspect UTP and optical fiber cable jacket materials for NRTL certification markings. Inspect cabling terminations in communications equipment rooms for compliance with color-coding for pin assignments, and inspect cabling connections for compliance with TIA/EIA-568-B.1.
2. Visually confirm Category 6**,** marking of outlets, cover plates, outlet/connectors, and patch panels.
3. Visually inspect cable placement, cable termination, grounding and bonding, equipment and patch cords, and labeling of all components.
4. Test UTP backbone copper cabling for DC loop resistance, shorts, opens, intermittent faults, and polarity between conductors. Test operation of shorting bars in connection blocks. Test cables after termination but not cross-connection.

    a. Test instruments shall meet or exceed applicable requirements in TIA/EIA-568-B.2. Perform tests with a tester that complies with performance requirements in "Test Instruments (Normative)" Annex, complying with measurement accuracy specified in "Measurement Accuracy (Informative)" Annex. Use only test cords and adapters that are qualified by test equipment manufacturer for channel or link test configuration.

5. UTP Performance Tests:

    a. Test for each outlet and MUTOA. Perform the following tests according to TIA/EIA-568-B.1 and TIA/EIA-568-B.2:

        1) Wire map.
        2) Length (physical vs. electrical, and length requirements).
        3) Insertion loss.
        4) Near-end crosstalk (NEXT) loss.
        5) Power sum near-end crosstalk (PSNEXT) loss.
        6) Equal-level far-end crosstalk (ELFEXT).
        7) Power sum equal-level far-end crosstalk (PSELFEXT).
        8) Return loss.
        9) Propagation delay.
        10) Delay skew.
6. Final Verification Tests: Perform verification tests for UTP systems after the complete communications cabling and workstation outlet/connectors are installed.

    a. Voice Tests: These tests assume that dial tone service has been installed. Connect to the network interface device at the demarcation point. Go off-hook and listen and receive a dial tone. If a test number is available, make and receive a local, long distance, and digital subscription line telephone call.
    b. Data Tests: These tests assume the Information Technology Staff has a network installed and is available to assist with testing. Connect to the network interface device at the demarcation point. Log onto the network to ensure proper connection to the network.

Copyright 2014 AIA MasterSpec Premium

D. Document data for each measurement. Data for submittals shall be printed in a summary report that is formatted similar to Table 10.1 in BICSI TDMM, or transferred from the instrument to the computer, saved as text files, and printed and submitted.

E. End-to-end cabling will be considered defective if it does not pass tests and inspections.

F. Prepare test and inspection reports.

3.7 SOFTWARE SERVICE AGREEMENT

A. Technical Support: Beginning with Substantial Completion, provide software support for **two** years.

B. Upgrade Service: Update software to latest version at Project completion. Install and program software upgrades that become available within two years from date of Substantial Completion. Upgrading software shall include operating system. Upgrade shall include new or revised licenses for use of software.

1. Provide 30 days' notice to Owner to allow scheduling and access to system and to allow Owner to upgrade computer equipment if necessary.

3.8 DEMONSTRATION

A. Train Owner's maintenance personnel in cable-plant management operations, including changing signal pathways for different workstations, rerouting signals in failed cables, and keeping records of cabling assignments and revisions when extending wiring to establish new workstation outlets.

END OF SECTION 271500

Architectural Cutsheets

Armstrong Flooring
Cottage Tan 51830

June 29, 2015

Standard EXCELON®

Imperial® Texture • Imperial Texture Rave® • MultiColor™

Vinyl Composition Tile (VCT)

Armstrong®
COMMERCIAL FLOORING

Market-leading performance, quality and durability in VCT products all from Armstrong, the industry leader in VCT for decades. Composed of 85% North American limestone and manufactured in three US locations, Armstrong® Imperial Texture is a responsible choice. Rave provides bold, eye-catching colors while MultiColor offers three base colors with four accent colors that coordinate with Imperial Texture. All three products are true through-pattern construction.

PRODUCT INFORMATION	
Construction	Vinyl Composition Tile
Product Line	Imperial Texture, Imperial Texture Rave, MultiColor
International Product Specifications	ASTM F 1066 Class 2 – Through Pattern, ISO 10595, Type II
Overall Thickness	1/8 in. (3.2 mm); 3/32 in. (2.4 mm) – Imperial Texture only
Wear Layer Thickness	1/8 in. (3.2 mm); 3/32 in. (2.4 mm) – Imperial Texture only
Finish	Fast Start Factory Finish
Installation	Full Spread Adhesives –S-515 High-Moisture, S-525 High-Moisture, S-700 Thin Spread, S-750 Premium
Maintenance Options	Polish
PACKAGING	
Tile Sizes	12 in. x 12 in. (305 mm x 305 mm)
Tiles Per Carton	45 – 45 sq. ft.
Shipping Weight	63 lbs. (28.6 kg) per carton

	PERFORMANCE	TEST METHOD	MINIMUM REQUIREMENT	PERFORMANCE VS. REQUIREMENT
ASTM F 1066	Thickness	ASTM F 386	Nominal ± 0.005 in.	Meets
	Size	ASTM F 2055	± 0.016 in. per linear foot	Exceeds
	Squareness	ASTM F 2055	0.010 in. max	Exceeds
	Indentation – One Minute	ASTM F 1914	≥ 0.006 in. to ≤0.015 in.	Meets
	Indentation at 115° F	ASTM F 1914	< 0.032 in.	Exceeds
	Impact	ASTM F 1265	No cracks beyond limit	Exceeds
	Deflection	ASTM F 1304	1.0 in. minimum	Exceeds
	Dimensional Stability	ASTM F 2199	≤ 0.024 in. per linear foot	Exceeds
	Chemical Resistance	ASTM F 925	No more than slight change in surface dulling, attack or staining	Meets or Exceeds
	Resistance to Heat	ASTM F 1514	ΔE ≤ 8	Exceeds
Supplementary	Static Load Limit	ASTM F 970	≤ 0.005 in.	125 psi
	Fire Test Data – Flame Spread	ASTM E 648	0.45 watt/cm^2 or more Class I	Meets
	Fire Test Data – Smoke Evolution	ASTM E 662	450 or less	Meets
	Regional Materials	LEED® MR5.0	Meets Guidelines	Meets
	Recycled Content	LEED MR4.0	Meets Guidelines	Meets
	Certified Low Emitting Product	LEED EQ4.3	Meets Guidelines	Meets
	Certified Low Emitting Adhesive	LEED EQ4.1	Meets Guidelines	Meets
	Indoor Air Quality	FloorScore™	Meets Certification Guidelines	Certified
	Indoor Air Quality	CHPS 01350	Meets Certification Guidelines	Certified
	NSF/ANSI 332	Sustainability Assessment	Meets Certification Guidelines	Gold Level Certified

WARRANTY
5-Year Commercial Warranty when installed in accordance with Armstrong's Guaranteed Installation Systems manual, F-5061.

LINKS
Installation Instructions – www.armstrong.com/pdbupimages/200839.pdf
Maintenance Information – www.armstrong.com/pdbupimages/197969.pdf
View the full line – www.armstrong.com/commflooringna/products/vct
Email Techline – www.armstrong.com/commflooringna/contact_techline.jsp

©2012 Armstrong World Industries, Inc.

Standard EXCELON®

Imperial® Texture • Imperial Texture Rave® • MultiColor™

Vinyl Composition Tile (VCT)

Armstrong®
COMMERCIAL FLOORING

Sustainability Facts

Serving	As Served
Imperial Texture	
Certified to meet LEED® EQ Credit: Low Emitting Interiors	✓
Pre-Consumer Recycled Content	1%
Regional Materials*	Kankakee, IL Southgate, CA Jackson, MS
Adhesives	
Certified to meet LEED® EQ Credit: Low Emitting Interiors	✓
FloorScore™ Certified to CDPH Standard Method V1.1-2010	✓
Collaborative for High Performance Schools CHPS-IEQ2.2 & LABS-21 IEQ4.3	✓
U.S. Green Building Council Member	✓
Canada Green Building Council Member	✓
NSF/ANSI 332 Gold Level Certified	✓

*Depends on project location

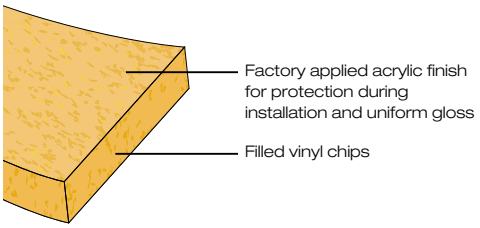

Imperial Texture

51911 51899 51811 51810 51803 51809 51805 51878 51800 51867 51932 51807 51938 51877

51915 51941 51861 51804 51873 51942 57501 51812 51813 51879 51881 57508 51883 51885

51910 51904 51860 51868 51869 51948 57504 51801 57503 57505 51934 51916 51872 51866

51876 51880 57507 51818 51874 51802 51824

57502 51816 51943 51821 51882 57506 51884

57500 51814 51944 51820 51946 51875 51947

Imperial Texture Rave

57512 57510 57509 57514

57517 57511 57516 57515 57513 57518

MultiColor

52500 52513 52515

52505 52514 52525

52506 52520 52523

52521 52516 52524

52517

52518

52522

Imperial Texture Classics

51836 51929 51830 51839 51928 51933

51927 51908 51901 51858 51905 51903 51906

©2012 Armstrong World Industries, Inc.

Modular Carpet
Key Largo (8206)
Mannington

June 29, 2015

Product Specifications

SCENA -- ULTRABAC RE

MANNINGTON COMMERCIAL

PHYSICAL CONSTRUCTION:

CONSTRUCTION:	Patterned Loop
FACE FIBER:	Invista Antron Legacy Type 6,6 Four Hole, Hollow Filament Nylon, with Permanent Stain and Bleach Protection, Static Control, and Duratech Soil Resistant Treatment, and a Fiber Modification Ratio of <1.5
DYE METHOD:	Solution / Yarn
GAUGE:	5/64
STITCHES PER INCH:	9.8
PILE THICKNESS:	.118 Inches
TUFTED YARN WEIGHT:	21 Ounces Per Square Yard
DENSITY:	Average Density = 6,406; Weight Density = 134,542
PRIMARY BACKING:	100% Synthetic
SECONDARY BACKING:	UltraBac RE with Minimum 10% Recycled Content and Lifetime Warranty Standard
STANDARD SIZE:	12' 6" Width
PATTERN REPEAT:	18 3/4" W x 53" L

ENVIRONMENTAL:

RECYCLED CONTENT:	Minimum 10% Post-Consumer Recycled Content by Total Product Weight*
MANUFACTURE LOCATION:	Calhoun, Georgia 30701 USA
NSF / ANSI-140 CERTIFICATION:	Platinum
CRI GREEN LABEL PLUS ID:	GLP2278

WARRANTIES:

WARRANTY:	Lifetime Limited Warranty, Covering Face Wear, Delamination, Tuft Bind, Unraveling, and Static Protection
BLEACH RESISTANT WARRANTY:	ColorSafe with 15 Year Limited Warranty Against Color Loss from Bleach Spills
STAIN RESISTANT WARRANTY:	XGUARD with 15 Year Limited Warranty Against Staining

PRODUCT TESTING:

RADIANT PANEL (ASTM E-648):	Class I (Direct Glue)
SMOKE CHAMBER (ASTM E-662):	Less than 450 (Flaming Mode)
METHENAMINE PILL TEST (ASTM D-2859):	Passes
ELECTROSTATIC PROPENSITY (AATCC 134):	Less than 3.0 KV

RECOMMENDED ADHESIVE:

MULTI-PURPOSE ADHESIVE:	Mannington Ultra Adhesive
CRI GREEN LABEL PLUS ID:	GLP70513
VOC LIMITS:	Meets SCAQMD Rule #1168
BOND WARRANTY:	10 Year Limited Warranty When Used With Mannington UltraBac RE Carpet

Specifications are subject to normal manufacturing variances. Specifications are subject to change without notice when technological advancements provide improved product performance.

* Most products contain a higher percentage of recycled content than the minimums listed above. Please contact Mannington Technical Services at 1-800-241-2262 for updated, specific recycled content percentages for each product.

Armstrong Acoustic
Ceiling Tile
Ultima White

June 29, 2015

ULTIMA®

Square Lay-in

fine texture

USDA CERTIFIED BIOBASED PRODUCT
PRODUCT 88%

10-YEAR Availability — Items 1910, 1913

Ultima Square Lay-in with Prelude® 15/16" suspension system (Pg. 259)

KEY SELECTION ATTRIBUTES

- Smooth, clean, durable finish – Washable, Impact-resistant, Scratch-resistant, Soil-resistant
- Excellent sound absorption
- Ceiling-2-Ceiling™ Post-consumer Recycled Content options: items 1910HRC, 1913HRC. 71% Pre-consumer; 15% Post-consumer
- 88% Biobased content (see page 331)
- Available with AirGuard™ Coating
- Visual coordinates with Optima® for mixed (open/closed plan) applications
- Items 1910 and 1935 available with Create!™ colors and images – see pages 165-167
- Non-directional visual reduces installation time and scrap
- Compatible with TechZone™ Ceiling Systems (Pgs. 235-241)
- Meets USDA/FSIS guidelines for use in food processing areas (items 1935, 1938)
- 30-Year Limited System Warranty against visible sag, mold/mildew, and bacterial growth

TYPICAL APPLICATIONS

- Offices
- Healthcare – assists in addressing HIPAA and FGI acoustical requirements
- Classrooms
- Corridors
- Lobbies/reception areas
- Department stores/retail
- Kitchens, dining rooms, and food preparation areas (items 1935, 1938)

DETAIL (Other Suspension Systems compatible. Refer to listing on page 224.)

1. Ultima Square Lay-in
2. Ultima Square Lay-in with Prelude 15/16" suspension system

COLOR

White

Create! colors available on items 1910 and 1935. See pages 165-167.

ULTIMA®

Square Lay-in

fine texture

HRC items contain 15% or greater post-consumer recycled ceilings

CLOSED LOOP RECYCLED CONTENT
CEILING-2-CEILING

UP TO 86% RECYCLED CONTENT

LEED®

energy management	construction waste mgmt	regional materials*	design for flexibility	EPD	recyclable/ extended producer resp.	biobased materials	recycled content	sourcing of raw materials	material ingredient reporting	low emitting/ materials	lighting quality	acoustics
✓	✓	✓	✓	✓	✓	✓	✓	✓	✓	✓	✓	✓

Calculate LEED contribution at armstrong.com/greengenie

*LOCATION DEPENDENT

VISUAL SELECTION / PERFORMANCE SELECTION

Dots represent high level of performance.

Edge Profile	Susp. Dwg. Pgs. 273-277 armstrong.com/catdwgs	Item No.	Dimensions (Inches)	NRC	CAC	Fire Rating	Light Reflect	Anti-Mold & Mildew	Sag Resist	Certified Low VOC Emissions	Water Repel	Wash	Scrub	Impact	Scratch	Soil	Primary (Embodied) Energy	Recycled Content◆	Recycle Program	Warranty†
ULTIMA Square Lay-in				UL Classified					Humi-Guard+								Below 11MJ/SF		Yes	No. of Years
15/16" Square Lay-in	1	**1420**	6 x 48 x 3/4"	N/A	N/A	Class A	0.90 ●	●	●	●	–	●	–	●	●	●	●	High	●	30
	1	**1425**	6 x 60 x 3/4"	N/A	N/A	Class A	0.90 ●	●	●	●	–	●	–	●	●	●	●	High	●	30
	1	**1990**	12 x 48 x 3/4"	0.65	35	Class A	0.90 ●	●	●	●	–	●	–	●	●	●	●	High	●	30
	1	**1991**	12 x 60 x 3/4"	0.65	35	Class A	0.90 ●	●	●	●	–	●	–	●	●	●	●	High	●	30
	1	**1992**	12 x 72 x 3/4"	0.65	35	Class A	0.90 ●	●	●	●	–	●	–	●	●	●	●	High	●	30
	1	**1910** **1910HRC****	24 x 24 x 3/4" 24 x 24 x 3/4"	0.70 ●	35	Class A	0.90 ●	●	●	●	–	●	–	●	●	●	●	High High	●	30
	1	**1913** **1913HRC****	24 x 48 x 3/4" 24 x 48 x 3/4"	0.70 ●	35	Class A	0.90 ●	●	●	●	–	●	–	●	●	●	●	High High	●	30
	1	**1984**	24 x 60 x 3/4"	0.70 ●	35	Class A	0.85 ●	●	●	●	–	●	–	●	●	●	●	High	●	30
	1	**1980**	24 x 72 x 3/4"	0.70 ●	35	Class A	0.90 ●	●	●	●	–	●	–	●	●	●	●	High	●	30
	1	**FastSize™**	W: 4" – 24" / L: 4" – 72" 3/4" Thick	0.70 ●	35	Class A	0.90 ●	●	●	●	–	●	–	●	●	●	●	High	●	30
ULTIMA Health Zone™/High Washability																				
15/16" Square Lay-in	1, 6, 7	**1935**	24 x 24 x 3/4"	0.70 ●	38 ●	Class A	0.86 ●	●	●	●	●	●	●	●	●	●	●	High	●	30
	1, 6, 7	**1938**	24 x 48 x 3/4"	0.70 ●	38 ●	Class A	0.86 ●	●	●	●	●	●	●	●	●	●	●	High	●	30
ULTIMA with AirGuard™ Coating																				
15/16" Square Lay-in	1	**1900**	24 x 24 x 3/4"	0.70 ●	35	Class A	0.90 ●	●	●	●	–	●	–	●	●	●	●	High	●	30
	1	**1903**	24 x 48 x 3/4"	0.70 ●	35	Class A	0.90 ●	●	●	●	–	●	–	●	●	●	●	High	●	30

** Other sizes not available for HRC items.

SUSPENSION SYSTEMS

15/16"

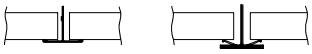

Prelude

Clean Room™ (Steel or Aluminum)

Blizzard White – Suspension System Finish

A color and texture coordinated suspension system to complement Ultima ceiling panels for a monolithic look and feel. Available for Prelude XL® and XL HRC.

PHYSICAL DATA

Material
Wet-formed mineral fiber with DuraBrite® acoustically transparent membrane. 1935, 1938 – Wet-formed mineral fiber with DuraBrite acoustically transparent water-repellent membrane.

Surface Finish
DuraBrite with factory-applied latex paint

Fire Performance
ASTM E84 and CAN/ULC S102 surface burning characteristics. Flame Spread Index 25 or less. Smoke Developed Index 50 or less. (UL labeled)

ASTM E1264 Classification
Type IV, Form 2, Pattern E
Fire Class A

Sag Resistance
HumiGuard® Plus – superior resistance to sagging in high humidity conditions up to, but not including, standing water and outdoor applications.

Anti Mold/Mildew & Bacteria
BioBlock® Plus contains an anti-microbial treatment and provides guaranteed resistance against growth of mold/mildew and Gram-positive and Gram-negative odor/stain-causing bacteria for 30 years.

VOC Emissions
Third party certified compliant with California Department of Public Health CDPH/EHLB/Standard Method Version 1.1, 2010. This standard is the guideline for low emissions in LEED, CalGreen Title 24, ANSI/ASHRAE/USGBC/IES Standard 189; ANSI/GBI Green Building Assessment Protocol.

Primary (Embodied) Energy
See all LCA information on our EPD's.

High Recycled Content◆
Contains greater than 50% total recycled content. Total recycled content based on product composition of post-consumer and pre-consumer (post-industrial) recycled content per FTC guidelines.

Insulation Value
R Factor – 2.2 (BTU units)
R Factor – 0.39 (Watts units)

30-Year Performance Guarantee & Warranty†
When installed with Armstrong Suspension System. Details at armstrong.com/warranty

Cleaning Recommendations (Items 1936, 1937 only)
To clean panel, use a clean, white cloth with water or a mild detergent and wipe surface. To disinfect panel, lightly spray surface and wipe clean with a clean, white cloth. Acceptable colorless disinfectants include:
- Sodium hypochlorite • Hydrogen peroxide
- Quaternary ammonium

Weight; Square Feet/Carton
1420, 1425 – 1.05 lbs/SF; 24 SF/ctn
1910, 1913, 1938, 1900, 1903, 1935 – 1.08 lbs/SF; 48 SF/ctn
1980 – 1.08 lbs/SF; 72 SF/ctn
1984 – 1.08 lbs/SF; 80 SF/ctn
1990 – 1.08 lbs/SF; 24 SF/ctn
1991 – 1.08 lbs/SF; 30 SF/ctn
1992 – 1.08 lbs/SF; 36 SF/ctn

Minimum Order Quantity
1 carton

Metric Items Available
1910M, 1913M – Metric items are subject to extended lead times and minimum quantities. Contact your representative for more details.

TechLine℠ / 1 877 ARMSTRONG
armstrong.com/commceilings
(search: ultima)
BPCS-4595-914

LEED® is a registered trademark of the U.S. Green Building Council
All other trademarks used herein are the property of AWI Licensing Company and/or its affiliates © 2014 AWI Licensing Company
Printed in the United States of America

Armstrong®

DuPont Zodiaq Quartz
Countertop
Mocha Latte

June 29, 2015

Zodiaq®

DUPONT™ ZODIAQ® PERFORMANCE PROPERTIES

PHYSICAL PROPERTIES

Property	Test	Typical Result
Density	ASTM D792	2.4 g/cm^3
Nominal Thickness		2 cm and 3 cm
Approximate weight per square foot (2 cm)		10 lbs.
Approximate weight per square foot (3 cm)		15 lbs.
Thermal Expansion	ASTM D696	1.45 x 10^{-5} m/m°C (2.61 x 10^{-5} in./in.°F)
Hardness	Mohs Hardness Scale	7

MECHANICAL PROPERTIES

Property	Test	Typical Result
Flexural Strength	ASTM D790	>5,300 psi
Flexural Modulus	ASTM D790	5.3 - 5.7 x 10^6 psi
Flexural Elongation	ASTM D790	>0.1%
Compression Strength (Dry)	ASTM C170	27,300 psi
Compression Strength (Wet)	ASTM C170	24,400 psi

FITNESS FOR USE

Property	Test	Typical Result
Gloss	ANSI Z124	45-50
Colorfastness	NEMA LD 3-3.3	No Effect
Ball Impact Resistance: Slabs No fracture - 1/2 lb. ball - 2&3 cm	NEMA LD 3-3.8	164 in (No failure at height)
Wear and Cleanability	CSA B45.5-11/IAPMO Z124-2011	Passes
Stain Resistance	CSA B45.5-11/IAPMO Z124-2011	Passes
Fungal Resistance	ASTM G21	ASTM Rating of 0, No observed growth on product at 100x power
Bacterial Resistance	ASTM G22	No observed growth on product at 100x power
Microbial Resistance	UL Environment, UL 2824 (ASTM D6329)	Highly Resistant to Mold Growth
Boiling Water Resistance	NEMA LD 3-3.5	None to slight effect
High Temperature Resistance	NEMA LD 3-3.6	None to slight effect
Freeze-Thaw Cycling	ASTM C1026	Unaffected
Point Impact	ANSI Z124.6.4.2.1	Passes
Static Coefficient of Friction (as received)	ASTM C1028	0.89/0.61 (Dry/Wet)
Abrasion Resistance	ASTM C501	139
Water Absorption	ASTM C373	0.12%
Long and Short term	ASTM D570	<0.04%
Moisture Expansion	ASTM C370	<0.01% average
Flammability	NFPA 101® Life Safety Code®	Class A
Flame Spread Index	ASTM E84, NFPA 255 & UL 723)	FSI = 0 for 3 cm FSI = 5 for 2 cm
Smoke Developed Index	ASTM E84, NFPA 255 & UL 723)	SDI = 40 for 3 cm SDI =75 for 2 cm

Typical results for 3 cm product unless gauge is specified. Properties may vary by aesthetic. These values are not intended for engineering calculations, if precise calculations are required contact DuPont for additional information. New York City Material Equipment Acceptance (MEA) number is 431-00-M.

Techline Laminated Counters Bright Walnut W15

June 29, 2015

techline®
Functional. By design.

Limited Lifetime Warranty

Techline® warrants to the original purchaser that its product is free from defects in material and workmanship for as long as the original purchaser owns the Techline® product, providing product was installed properly and under normal use.

This warranty is expressly in lieu of any and all other warranties, expressed or implied, including the warranties of merchantability and fitness for a particular purpose. Techline® makes no other representations or warranties of any kind, and shall not be liable for any incidental, consequential or other damages for any alleged negligence, breach of warranty, or upon any other theory, other than the limited warranty first set forth above.

It is expressly understood and agreed that the limit of Techline's® liability shall be, at Techline's® sole option, the repair or re-supply of a like quantity of non-defective product, and that Techline® shall have no such liability except where the damage results solely from a breach of Techline's® warranty. Any claim under this warranty shall be deemed waived unless made in writing and received by Techline® within thirty (30) days of the date the defect to which each claim is discovered or would have been discovered. The term "original purchaser" as used herein, shall be deemed to mean that party for whom the product is originally installed.

SUSTAINABLE USE OF WOOD FIBER
Meets Composite Panel Assn Standard A-11
ECO-CERTIFIED
ECCproduct.org

FSC
www.fsc.org
FSC® C014934
The mark of responsible forestry

Ask about our FSC availability.

UL
GREENGUARD
PRODUCT CERTIFIED FOR LOW CHEMICAL EMISSIONS
UL.COM/GG
UL 2818
GOLD

CERTIFIED
ARCHITECTURAL WOODWORK INSTITUTE
QUALITY WOODWORK

AWI ARCHITECTURAL WOODWORK INSTITUTE

SEFA

Construction

techline

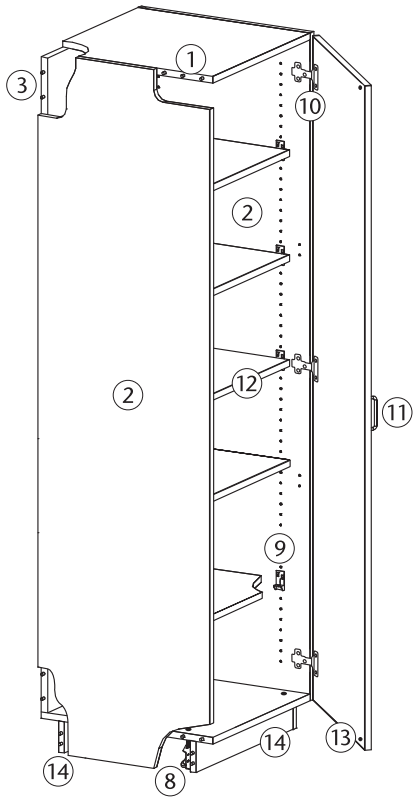

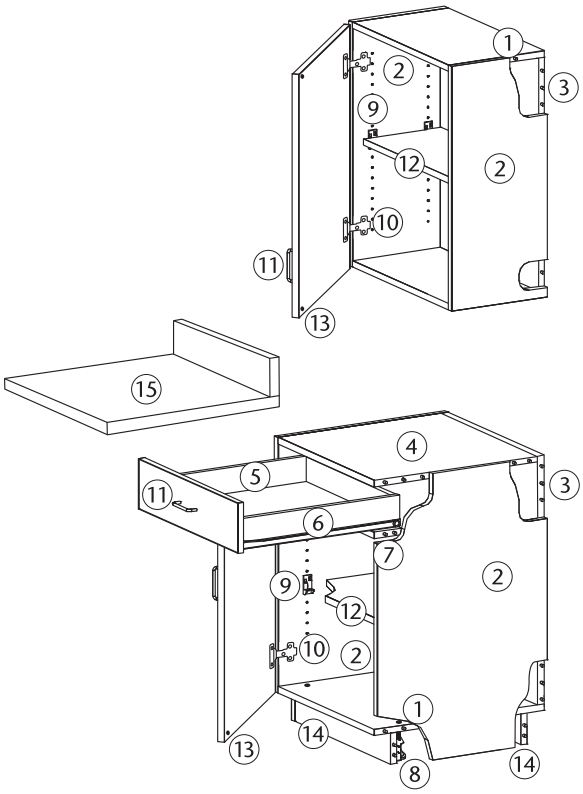

1. Rigid structural dowel pin construction.
2. Durable, two-sided, 3/4"-thick thermally fused laminate (TFL). High strength core materials and balanced laminate applications. No more white interiors. See Design Group 1 Offering.
3. Full 3/4"-thick backs (no rail) as an integral component.
4. 3/4"-thick, finished sub-top for horizontal and vertical stability.
5. Maple finish four-sided drawer design with 3/4"-thick side members and dowel pin structural joints. Four-sided captured-in-groove laminated drawer bottom. Removable finished front.
6. 120# full extension ball bearing drawer slide, tested under ANSI/BIFMA X5.5 Section 7.
7. Frame rails between drawers and lower compartments increase cabinet rigidity.
8. Four corner levelers, accessible from within the cabinet.
9. Premium strength, twin pin 200# shelf support. Clear polycarbonate supports with anti-tip and shelf hold features. Adjustments on 1-1/4" (32mm) centers.
10. 120° concealed style self-closing hinges.
11. Large grip 128mm pulls or single knobs in powder coated matte nickel finish. See options in Accessories section. No pulls or knobs on valance front cabinets. Horizontal pull orientation on all fronts, with the exception of Lockers, which have vertical orientation.
12. Shelves with impact resistant edge extrusion. Shipped in place – no need to find material.
13. Cushion bumpers on door and drawer fronts.
14. Dual integral kicks for cabinet rigidity. Upper cabinet loading transfers direct-to-floor, reducing bottom joint stresses.
15. Countertop work surfaces available in laminate and solid surface. See Design Group 2 and 3 Offerings.

Full 3/4"-thick Backs and Finished Sub-Top

- Dowel pin structural joints
- Edgebanding on all back edges
- Full 3/4"-thick finished sub-top provides horizontal and vertical stability

Full 4-Sided Drawer Design

- 3/4"-thick side members
- Dowel pin structural joints
- Removable front
- 4-sided captured-in-groove laminated drawer bottom

Full Extension Ball Bearing Slide

- Tested to 120# per ANSI/BIFMA X5.5 Section 7
- Silky smooth ball bearing action
- Hold/close function
- Lever disconnect for easy drawer removal
- Zinc plate finish

Patented Twin Pin Low Profile Shelf Supports

- Premium strength, 200# tested shelf support
- Clear polycarbonate supports with anti-tip and shelf hold features
- Adjustments on 1-1/4" (32mm) centers

120° Concealed Hinge

- Self closing
- 120° pivot swing
- Nickel plate finish
- Minimal invasion of interior space
- Quick disconnect feature

Bentwire 128 and Slimline 128 Pulls, Mushroom Knob

- Powder coated matte nickel finish
- 128mm (5") length pulls for easy grip and ADA compliance
- Horizontal pull orientation on all fronts, with the exception of Lockers, which have vertical orientation.

6-Tumbler Dead Bolt Locking System

- 6-tumbler system for greater security
- Double-bit keys, allowing insertion up or down
- Key number stamped on lock face and keys
- Diecast lock body with positive dead bolt sliding tang
- Secure engagement of dead bolt tangs into grooves or stop tabs

Additional Lock Styles for Lockers

Cam Lock Hasp

Digital Code Lock

techline

Design Group 1

Laminate

Colors shown are printed reproductions. Actual colors may vary. Not all designs are shown at 100% scale. Samples available upon request.

Colors available in finish shown below color name and number.

All colors have matching edgebanding.

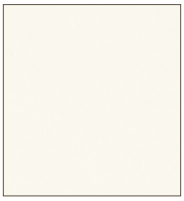
White 043
Softex

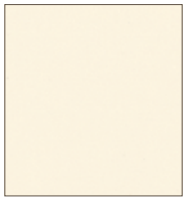
Antique White C42
Softex

Beige 021
Softex

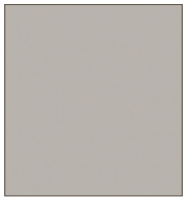
Platinum Gray A22
Softex

Dove Grey II C82
Softex

Slate 129
Softex

Black 174
Softex

Kensington Maple 577
Softex

Solar Oak 092
Open Grain

Brazilwood W07
Softex

Monticello Maple W21
Softex

Honey Maple W37
Softex

Fonthill Pear 621
Softex

American Cherry 634
Softex

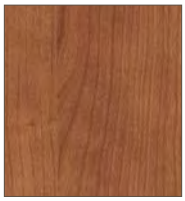
Amber Cherry 681
Softex

Wild Cherry 567
Softex

Oiled Cherry 612
Softex

Windsor Mahogany 549
Softex

Brighton Walnut W15
Softex

Empire Mahogany 629
Softex

Cocoa Maple 523
Softex

Umbrian Oak W69
Linea

Richmond Cherry W51
Artika

Drift Loud G92
Artika

Midnight Espresso 632
Linea

techline

DRAWER BANK UNITS
Pull Drilling/Lock Codes
0 (2 holes/no lock)
1 (2 holes/lock all fronts)
2 (2 holes/gang lock)
3 (2 holes/single lock)
4 (no holes/no locks)
5 (no holes/lock all fronts)
6 (no holes/gang lock)
7 (no holes/single lock)
A (1 hole/no lock)
B (1 hole/lock all fronts)
C (1 hole/gang lock)
D (1 hole/single lock)

Drawer

Model	W	H	D		Pull Drilling / Lock	Color
B332	_ _	_ _	_ _	9	_	_ _ _
	15 16 18 21 24 30 36	29 32 35	20 24		from pull drilling/ lock codes chart	from Design Group 1 offering

3 Equal Drawers

B332

Model	W	H	D		Pull Drilling / Lock	Color
B339	_ _	_ _	_ _	9	_	_ _ _
	15 16 18 21 24 30 36	32 35	20 24		from pull drilling/ lock codes chart	from Design Group 1 offering

Top Drawer: 6⅛"H Front
2 Equal Drawers

B339

Drawer

Model	W	H	D		Pull Drilling / Lock	Color
B372	16	32	_ _	9	_	_ _ _
			20 24		from pull drilling/ lock codes chart	from Design Group 1 offering

2 Equal Upper Drawers: 6"H Fronts (nom.)
2 Equal Lower Drawers: 8"H Fronts (nom.)

B372

Model	W	H	D		Pull Drilling / Lock	Color
B370	_ _	_ _	_ _	9	_	_ _ _
	15 16 18 21 24 30 36	29 32 35	20 24		from pull drilling/ lock codes chart	from Design Group 1 offering

4 Equal Drawers

B370

Model	W	H	D		Pull Drilling / Lock	Color
B374	_ _	_ _	_ _	9	_	_ _ _
	15 16 18 21 24 30 36	32 35	20 24		from pull drilling/ lock codes chart	from Design Group 1 offering

Top Drawer: 6⅛"H Front
3 Equal Drawers

B374

NOTE: Pulls and Lock Options are specified separately via the online ordering system.

DOOR UNITS
Pull Drilling/Lock Codes
0 (2 holes/no lock)
1 (2 holes/lock all fronts)
4 (no holes/no locks)
5 (no holes/lock all fronts)
A (1 hole/no lock)
B (1 hole/lock all fronts)

Combination Storage

Model	W	H	D		Pull Drilling / Lock	Color
B421	_ _	_ _	_ _	9	_	_ _ _
	15 16 18 21	29 35	20 24		from pull drilling/ lock codes chart	from Design Group 1 offering

Drawer: 6⅛"H Front
Right Hinge Door
Adjustable Shelf

B421

Model	W	H	D		Pull Drilling / Lock	Color
B422	_ _	_ _	_ _	9	_	_ _ _
	15 16 18 21	29 35	20 24		from pull drilling/ lock codes chart	from Design Group 1 offering

Drawer: 6⅛"H Front
Left Hinge Door
Adjustable Shelf

B422

Combination Storage

Model	W	H	D		Pull Drilling / Lock	Color
B430	_ _	_ _	_ _	9	_	_ _ _
	24 30 32 36	29 35	20 24		from pull drilling/ lock codes chart	from Design Group 1 offering

Drawer: 6⅛"H Front
Doors
Adjustable Shelf

B430

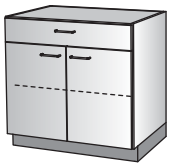

Model	W	H	D		Pull Drilling / Lock	Color
B441	_ _	_ _	_ _	9	_	_ _ _
	36 42 48	29 35	20 24		from pull drilling/ lock codes chart	from Design Group 1 offering

2 Drawers: 6⅛"H Fronts
Doors
Center Divider
Adjustable Shelves

B441

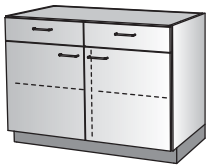

NOTE: Pulls and Lock Options are specified separately via the online ordering system.

techline

DOOR UNITS
Pull Drilling/Lock Codes
0 (2 holes/no lock)
1 (2 holes/lock all fronts)
4 (no holes/no locks)
5 (no holes/lock all fronts)
A (1 hole/no lock)
B (1 hole/lock all fronts)

Shelf Storage

Model	W	H	D			Color
B101	_ _	_ _	_ _	9	0	_ _ _
	15 16 18 21 24 30 32 36	29 32 35	20 24			from Design Group 1 offering

Adjustable Shelf

B101

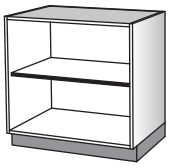

Shelf Storage

Model	W	H	D		Pull Drilling / Lock	Color
B120	_ _	_ _	_ _	9	_	_ _ _
	15 16 18 21	29 32 35	20 24		from pull drilling/ lock codes chart	from Design Group 1 offering

Right Hinge Door
Adjustable Shelf

Model	W	H	D		Pull Drilling / Lock	Color
B121	_ _	_ _	_ _	9	_	_ _ _
	15 16 18 21	29 32 35	20 24		from pull drilling/ lock codes chart	from Design Group 1 offering

Left Hinge Door
Adjustable Shelf

Model	W	H	D		Pull Drilling / Lock	Color
B129	_ _	_ _	_ _	9	_	_ _ _
	24 30 32 36	29 32 35	20 24		from pull drilling/ lock codes chart	from Design Group 1 offering

Doors
Adjustable Shelf

B120

B121

B129

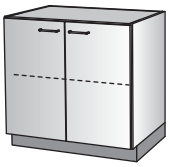

NOTE: Pulls and Lock Options are specified separately via the online ordering system.

6-Tumbler Dead Bolt Locking System

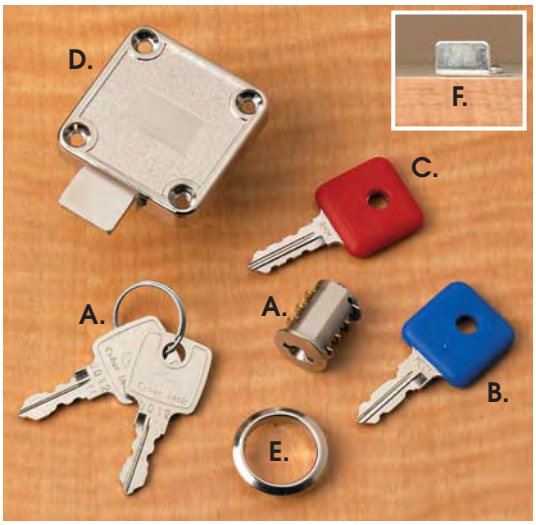

A. **0261-1041000 _ _ _** : Lock Core (26 options), 2 Keys

B. **0261-1047000000** : Blue Master Key

C. **0261-1048000000** : Red Core Removal Key

D. Lock Body

E. Trim Bezel

F. Strike Plate

6-Tumbler Dead Bolt Locking System Assemblies

Single Door Lock Assembly

Item Number	Core#
0261-2867000	_ _ _
	001 to 026

Assembly includes:
6-Tumbler Dead Bolt Lock Core
(26 options – 001 thru 026)
Lock Body
Trim Bezel
Strike Plate
2 Double Bit Keys
Key Number Stamped on Core Face and Keys

Double Door Lock Assembly

Item Number	Core#
0261-2868000	_ _ _
	001 to 026

Assembly includes:
6-Tumbler Dead Bolt Lock Core
(26 options – 001 thru 026)
Lock Body
Trim Bezel
Strike Plate
Catch Plate
2 Double Bit Keys
Key Number Stamped on Core Face and Keys

Drawer Lock Assembly

Item Number	Core#
0261-2869000	_ _ _
	001 to 026

Assembly includes:
6-Tumbler Dead Bolt Lock Core
(26 options – 001 thru 026)
Lock Body
Trim Bezel
2 Double Bit Keys
Key Number Stamped on Core Face and Keys

6-Tumbler Dead Bolt Locking System Accessories

Item Number	Core#
0261-1041000	_ _ _
	001 to 026

6-Tumbler Dead Bolt Lock Core
(26 options – 001 thru 026)
2 Double Bit Keys
Key Number Stamped on Core Face and Keys
Nickel Plate Finish

Item Number
0261-1047000000

Blue Master Key for Supervisory Access

Item Number
0261-1048000000

Red Core Removal Key for Re-Keying

Accessories

techline

Pulls

Item Number
0161-0185000000

Bentwire 128 Pull
Powder Coated Matte Nickel Finish
128mm (5") Length for Easy Grip
and ADA Compliance

0161-0185000000

Item Number
0161-0154000000

Slimline 128 Pull
Powder Coated Matte Nickel Finish
128mm (5") Length for Easy Grip
and ADA Compliance

0161-0154000000

Knob

Item Number
0161-0340000000

Mushroom Knob
Powder Coated Matte Nickel Finish

0161-0340000000

Hinge

Item Number
0361-0093000000

120° Concealed Hinge
Self Closing
120° Pivot Swing
Nickel Plate Finish
Minimal Invasion of Interior Space

0361-0093000000

Shelf Support

Item Number
0263-1267000000

Twin Pin Low Profile Shelf Support
Premium Strength 200 lb. Load Rating (Patented)
Clear Polycarbonate
Locking Tabs to Prevent Shelf Tip-Out
Optional Screw Attachment to Shelf/End Panel
Adjustments on 1¼" (32mm) Centers

0263-1267000000

Drawer Slides

Item Number
0461-0672000000

For 20"-Deep Cabinets
Full Extension Ball Bearing Drawer Slide
Tested to 120# per ANSI/BIFMA X5.5 Section 7
Silky Smooth Ball Bearing Action
Hold/Close Function
Lever Disconnect for Easy Drawer Removal
Zinc Plate Finish

0461-0672000000

Item Number
0461-0673000000

For 24"-Deep Cabinets
Full Extension Ball Bearing Drawer Slide
Tested to 120# per ANSI/BIFMA X5.5 Section 7
Silky Smooth Ball Bearing Action
Hold/Close Function
Lever Disconnect for Easy Drawer Removal
Zinc Plate Finish

0461-0673000000

Roller Catch

Item Number
0261-1410000000

Heavy Duty 18 Gauge Steel Body
Nylon Glide Assembly for Smooth Action
Proper for ADA Applications

0261-1410000000

Item Number
0263-1398000000

Low Profile Design
Polycarbonate Material for Quiet Operation

0263-1398000000

Kitchen Floor Tile
Metropolitan Ceramics
108 Chestnut Brown

June 29, 2015

METROPOLITAN CERAMICS
Ironrock Since 1866

MADE IN THE USA
CANTON, OHIO

Search

PRODUCT INFORMATION DISTRIBUTION PROJECTS ENVIRONMENT ABOUT CONTACT

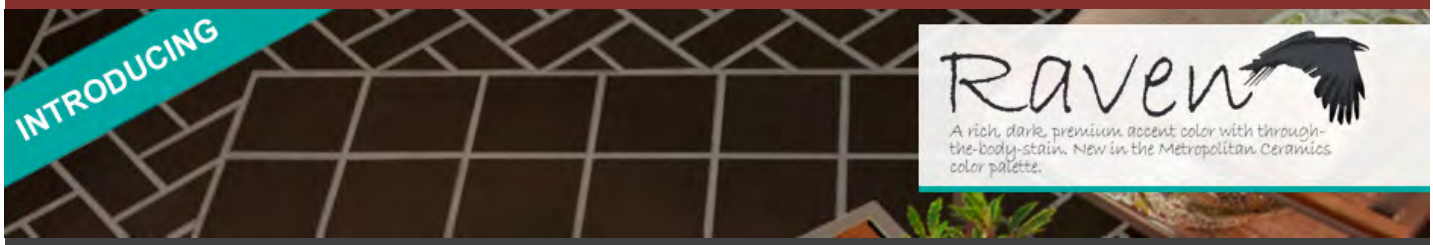

QUARRYBASICS®

Durable flooring tile for commercial and residential use

UNGLAZED QUARRY TILE

QUARRYBASICS® unglazed ceramic quarry tile offers the combination of long wear and great looking colors and shapes. The colors coordinate to fit high traffic, multi- use, commercial, and residential design needs. QUARRYBASICS are the fore-most natural, unglazed, high density ceramic quarry tile made in the U.S.A.

THROUGH-THE-BODY COLOR
Different from glazed tile, no chipping, wearing off or scratching.

LOW ABSORPTION
Resists soiling, suitable for exterior applications such as outdoor tiles for patios.

RELIEVED EDGES
Less susceptible to chipping, softer more natural looking.

A VARIETY OF COLORS SHAPES AND SIZES
Combine and create the design best suited for your application.

PROVEN PERFORMANCE
Years of providing durable flooring service in installations. Millions of square feet are specified and installed every year.

PRODUCT LINES

- QUARRYBASICS®
- ENVIROQUARRY®
- QUARRYBASICS® Abrasive
- METRO TREAD®
- QUARRYBASICS® X-Colors
- SOMERSET™
- DOWN TO EARTH®
- METROBRICK®

COLOR OPTIONS

#310 Mayflower Red

#220 Auburn

#205 Adobe

#101 Oyster Bay

#105 Buckskin

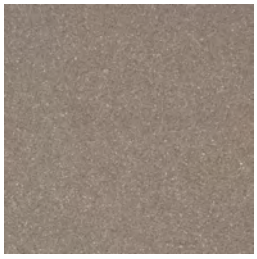
#107 Boulevard

#108 Chestnut Brown

#505 Plaza Gray

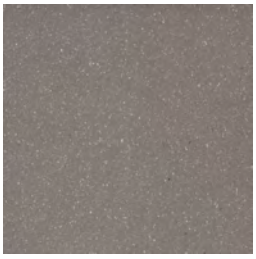
#507 Puritan Gray

#710 Raven

AVAILABLE SIZES (ALL SIZES ARE 1/2" THICK)

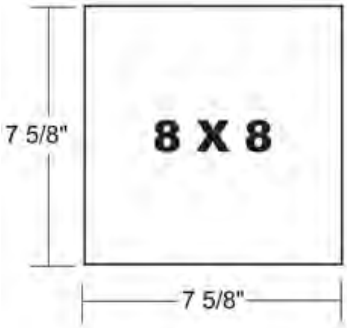

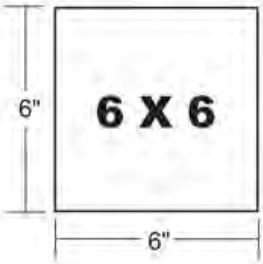

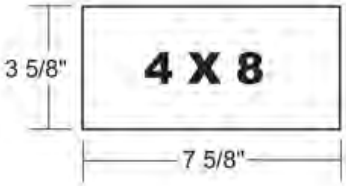

TRIM OPTIONS

#710 Raven is not available in trim.

Bullnose

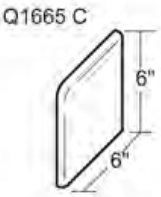

Bullnose Corner

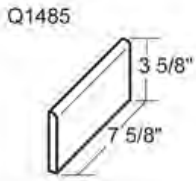

Bullnose

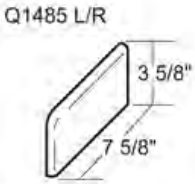

Bullnose Corner

Cove Base

Cove Base Outside Corner

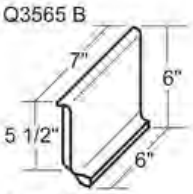

Cove Base Inside Corner

Cove Base

Cove Base Outside Corner

Cove Base

Cove Base Outside Corner

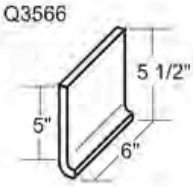

Flat Top Cove Base

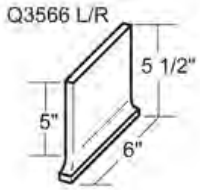

Flat Top Cove Base Outside Corner

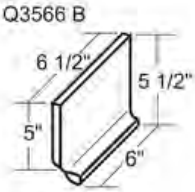

Flat Top Cove Base Inside Corner

Stair Tread

Transition Tile

***BARRIER FREE COMPONENTS**

clear tones QUARRYBASICS®

Kitchen Ceiling Tile
Smooth-Pro White

June 29, 2015

Smooth-Pro White 2x4 Ceiling Tile (Box of 10)

Type : Grid Mount

Dimensions : 24" x 48"

Color : White
Also Available in: Black

Material : Vinyl

Thickness : .18"

Weight : 4.5 lbs

Delivery Time : 5-7 Business Days

Brand : ProSeries

Certifications

PREP This product is USDA compliant for use in food processing areas. It is 100% waterproof and washable.

This tile is waterproof, Mold and Mildew resistant, and Cleans easily with soap and water.

FDA Our thermoform tiles comply with FDA regulations for use in food preparation and serving areas. This means that our tiles can be installed in areas where sanitation and cleanliness is a must.

All our thermoform tiles achieve a Class A fire rating. This is essential because most, if not all, counties in the US require a Class A fire rating for any interior building component.

** Price information valid as of June 30, 2015. Pricing is subject to change at any time.*

Kitchen Fiberglass Reinforced Plastic Wall Panels Glasboard

June 29, 2015

CRANE Composites

Clean & Durable
SURFACE SYSTEMS

GLASBORD® Wall Panels with Surfaseal Finish

It's a dirty world out there. Protect your facility with Crane Composites resilient wall coverings. Our Glasbord with Surfaseal® creates surfaces that deliver unsurpassed hygiene and durability for commercial environments such as restaurants and food processing plants.

GLASBORD EMBOSSED | STONE (15)

Made of fiberglass reinforced plastic (FRP), Glasbord with Surfaseal is extremely moisture-resistant and non-porous. The Surfaseal film finish, found only on Glasbord, provides a barrier that's highly resistant to impact and scratching. Because of it's unique process, the Surfaseal finish will not trap soil or bacteria on the panel. The surface is up to 10 times easier to clean and up to six times more stain resistant than other sanitary wall systems. The sturdy panels, which come in both pebbled and smooth textures, hold up under frequent maintenance cycles, and proven performance at an affordable price point with a 10-year limited warranty.

embossed & smooth
textures

GLASBORD with Surfaseal

PEBBLED EMBOSSED TEXTURE

White | 85

Colonial White | 83

Ivory | 84

Soft Beige | 70

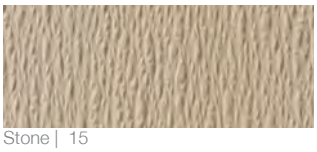
Stone | 15

Silver | 66

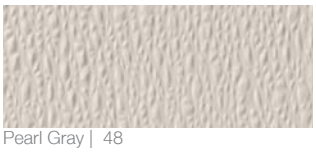
Pearl Gray | 48

Black | 1201

SMOOTH TEXTURE

White | 85

Gray | 636

Ivory | 84

Patterns and colors are a representation and may not accurately reflect the final product. Please obtain a sample of the product before making a final selection at FRPSamples.com

PRODUCT SPECS

AVAILABLE SIZES
4' x 8' | 4' x 10'
THICKNESS
0.09" (embossed) | 0.075" (smooth)
FIRE RATINGS
Class A or Class C | per ASTM-E84
CAN/ULC-S102
FM Approval Available
ADDITIONAL PRODUCT OFFERINGS
Ceiling and laminated panels also available. See our ceiling application flyer (form 7714) for additional information.

ACCESSORIES

- Standard Vinyl/PVC Moldings
- Polyurethane Seam Sealant

MANUFACTURING FOR OVER 60 YEARS!

A global leading provider of resilient wall and ceiling coverings. **Kemlite®** was established in 1954 and the company changed names to Crane Composites in 2007. Crane Composites is headquartered in Channahon, IL and all our products are manufactured in the United States. We work with hundreds of distributors, ensuring our products are easily accessible and readily available to our customers.

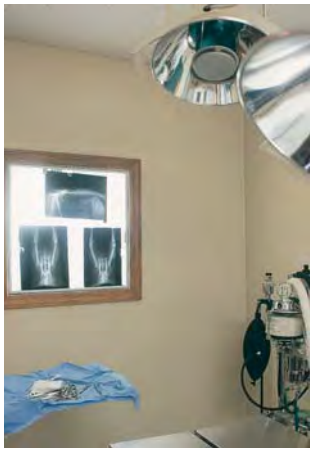

USDA/FSIS CERTIFIED

Glasbord panels meet USDA/FSIS requirements for a finished outer surface material that is rigid, durable, non-toxic, non-corrosive and moisture resistant.

FACTORY MUTUAL APPROVAL

Glasbord (FXE and FSFM) is the only interior FRP panel that is accepted under Factory Mutual Research approved Plastic Interior Finish Materials when installed in accordance with Factory Mutual Research Approval Standard 4880. This information is available at cranecomposites.com/FMApproved.pdf.

GREENGUARD
PRODUCT CERTIFIED FOR LOW CHEMICAL EMISSIONS
UL.COM/GG
UL 2818

MADE IN THE USA

cranecomposites.com | 1.800.435.0080 | 1.815.467.8666 [fax] | **sales@cranecomposites.com**

The following are trademarks of Crane Composites, Inc. or a related company: Glasbord, Kemlite, Kemply, Surfaseal, Sanigrid, Silhouette Trims and Varietex
6312 | REV 13 | 04.15 (7438)

Kitchen AERO Island Table

June 29, 2015

WORK TABLE

TG SERIES Flat Top, Galvanized Steel Undershelf

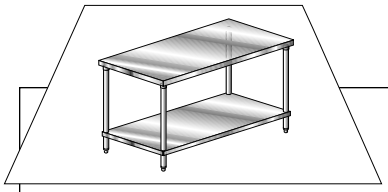

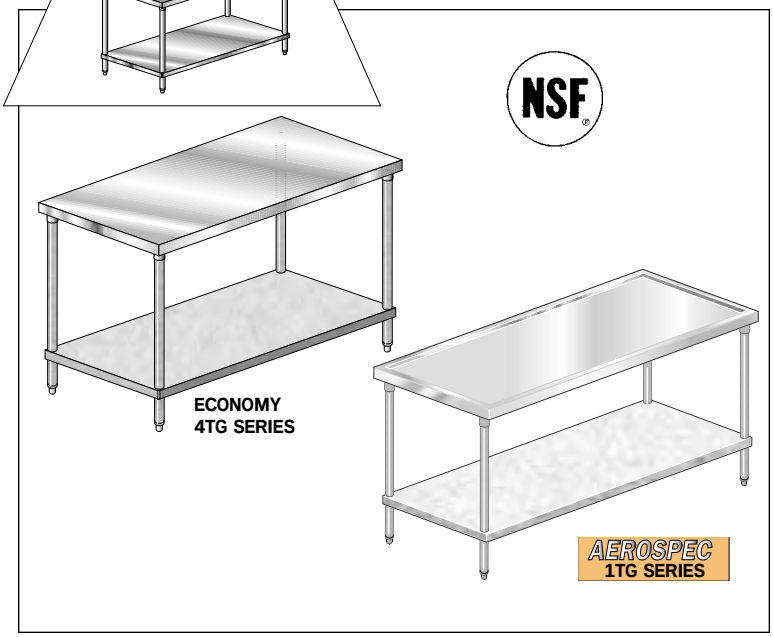

Item#_____Project_____

Quantity	ECONOMY 16GA 430 Model #	DELUX 16GA 304 Model #	PREMIUM 14GA 304 Model #	AEROSPEC 14GA 304 Model #
24" WIDE				
____	4TG–2424	3TG–2424	2TG–2424	1TG–2424
____	4TG–2430	3TG–2430	2TG–2430	1TG–2430
____	4TG–2436	3TG–2436	2TG–2436	1TG–2436
____	4TG–2448	3TG–2448	2TG–2448	1TG–2448
____	4TG–2460	3TG–2460	2TG–2460	1TG–2460
____	4TG–2472	3TG–2472	2TG–2472	1TG–2472
____	4TG–2484	3TG–2484	2TG–2484	1TG–2484
____	4TG–2496	3TG–2496	2TG–2496	1TG–2496
____	4TG–24108	3TG–24108	2TG–24108	1TG–24108
____	4TG–24120	3TG–24120	2TG–24120	1TG–24120
____	4TG–24132	3TG–24132	2TG–24132	1TG–24132
____	4TG–24144	3TG–24144	2TG–24144	1TG–24144
30" WIDE				
____	4TG–3024	3TG–3024	2TG–3024	1TG–3024
____	4TG–3030	3TG–3030	2TG–3030	1TG–3030
____	4TG–3036	3TG–3036	2TG–3036	1TG–3036
____	4TG–3048	3TG–3048	2TG–3048	1TG–3048
____	4TG–3060	3TG–3060	2TG–3060	1TG–3060
____	4TG–3072	3TG–3072	2TG–3072	1TG–3072
____	4TG–3084	3TG–3084	2TG–3084	1TG–3084
____	4TG–3096	3TG–3096	2TG–3096	1TG–3096
____	4TG–30108	3TG–30108	2TG–30108	1TG–30108
____	4TG–30120	3TG–30120	2TG–30120	1TG–30120
____	4TG–30132	3TG–30132	2TG–30132	1TG–30132
____	4TG–30144	3TG–30144	2TG–30144	1TG–30144
36" WIDE				
____	4TG–3636	3TG–3636	2TG–3636	1TG–3636
____	4TG–3648	3TG–3648	2TG–3648	1TG–3648
____	4TG–3660	3TG–3660	2TG–3660	1TG–3660
____	4TG–3672	3TG–3672	2TG–3672	1TG–3672
____	4TG–3684	3TG–3684	2TG–3684	1TG–3684
____	4TG–3696	3TG–3696	2TG–3696	1TG–3696
____	4TG–36108	3TG–36108	2TG–36108	1TG–36108
____	4TG–36120	3TG–36120	2TG–36120	1TG–36120
____	4TG–36132	3TG–36132	2TG–36132	1TG–36132
____	4TG–36144	3TG–36144	2TG–36144	1TG–36144
42" WIDE				
____	N.A.	N.A.	2TG–4248	1TG–4248
____	N.A.	N.A.	2TG–4260	1TG–4260
____	N.A.	N.A.	2TG–4272	1TG–4272
____	N.A.	N.A.	2TG–4284	1TG–4284
____	N.A.	N.A.	2TG–4296	1TG–4296
____	N.A.	N.A.	2TG–42108	1TG–42108
____	N.A.	N.A.	2TG–42120	1TG–42120
____	N.A.	N.A.	2TG–42132	1TG–42132
____	N.A.	N.A.	2TG–42144	1TG–42144

***FOR 48" WIDE TABLES SEE PRICE LIST**

MATERIAL

TOP
- 1⅞" turn down on 4 sides.
- Two heavy gauge steel box channels on 24" tables for rigidity.
- Three heavy gauge steel box channels on 30" tables for rigidity.
- Four heavy gauge steel box channels on 36" and 42" tables for rigidity.
- Sound deadened between table top and channels.

SHELF
- 18 gauge galvanized steel.

LEGS
- 1⅝" O.D. 16 gauge galvanized steel tubing, complete with 1" adjustable impact resistant, plastic feet.

DESIGN FEATURES
- Undershelf is the largest in the industry.
- Undershelf is fully adjustable and flexible in design.
- All tables fully cartoned.
- Easily assembled.

EXCLUSIVE AERO SAFETY EDGE
- Table and undershelf hemmed to eliminate cuts from rough edges.

CONSTRUCTION
- Top is polished to a #4 mill finish.
- Heliarc welded construction creates uniform, rock-solid unit.
- Gussets fully welded for extra rigidity.
- All tables shipped K.D.

AEROSPEC
- 1TG TABLES ARE ***AEROSPEC DESIGNED.*** *In addition to above specifications;*
- All four sides have a "V" countertop edge to eliminate spillage.

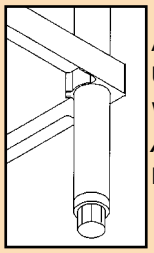

Adjustable Undershelf with Exclusive *AEROLOCK* Extrusion

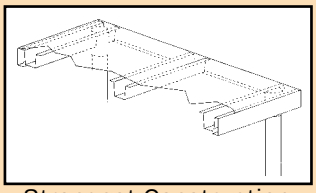

Strongest Construction in the Industry

SEE PAGES SP-6A & SP-6B TO DESIGN YOUR FLEXIBLE WORKCENTER

BUILT TO LAST A LIFETIME

email - sales@aeromfg.com
AERO MANUFACTURING COMPANY • 310 ALLWOOD ROAD, CLIFTON, NEW JERSEY 07012 • VOICE 973.473.5300 FAX 973.473.3794

© Copyright 2001 Aero Manufacturing Company, Inc. Specifications subject to change without notice.

DIMENSIONAL SPECIFICATIONS

TG SERIES Flat Top, Galvanized Steel Undershelf

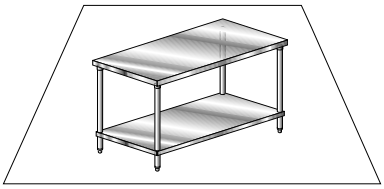

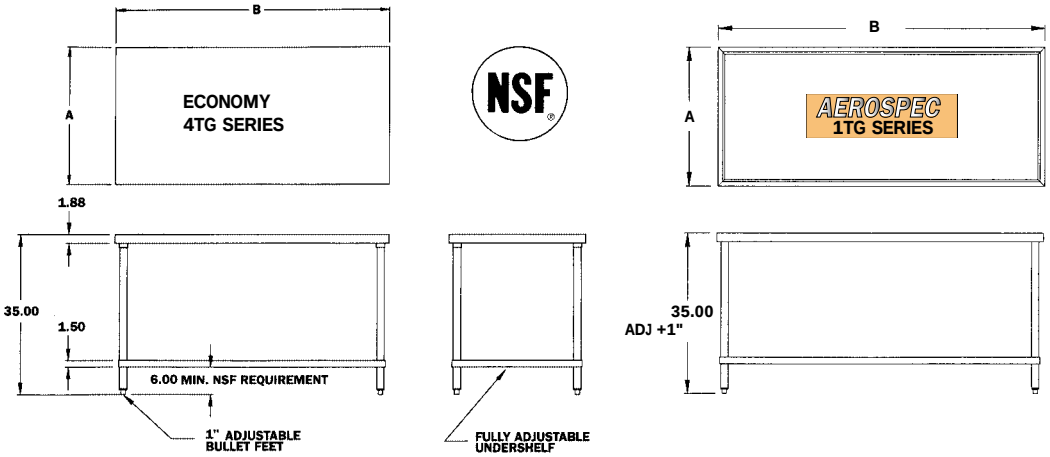

- Tables over 72" in length are shipped with six legs.
- Undershelf O.D. *Table Length -2", Table Width -2".*
- All feet have a full 1" adjustability.

A Width	B Length	ECONOMY 16GA 430 Model #	DELUX 16GA 304 Model #	PREMIUM 14GA 304 Model #	AEROSPEC 14GA 304 Model #	Ship Weight	Cubic Feet
24" WIDE							
24	24	4TG–2424	3TG–2424	2TG–2424	1TG–2424	25	3
24	30	4TG–2430	3TG–2430	2TG–2430	1TG–2430	42	3
24	36	4TG–2436	3TG–2436	2TG–2436	1TG–2436	53	4
24	48	4TG–2448	3TG–2448	2TG–2448	1TG–2448	64	5
24	60	4TG–2460	3TG–2460	2TG–2460	1TG–2460	74	7
24	72	4TG–2472	3TG–2472	2TG–2472	1TG–2472	85	8
24	84	4TG–2484	3TG–2484	2TG–2484	1TG–2484	103	9
24	96	4TG–2496	3TG–2496	2TG–2496	1TG–2496	114	11
24	108	4TG–24108	3TG–24108	2TG–24108	1TG–24108	130	12
24	120	4TG–24120	3TG–24120	2TG–24120	1TG–24120	227	13
24	132	4TG–24132	3TG–24132	2TG–24132	1TG–24132	251	15
24	144	4TG–24144	3TG–24144	2TG–24144	1TG–24144	266	16
30" WIDE							
30	24	4TG–3024	3TG–3024	2TG–3024	1TG–3024	47	3
30	30	4TG–3030	3TG–3030	2TG–3030	1TG–3030	52	4
30	36	4TG–3036	3TG–3036	2TG–3036	1TG–3036	59	5
30	48	4TG–3048	3TG–3048	2TG–3048	1TG–3048	72	7
30	60	4TG–3060	3TG–3060	2TG–3060	1TG–3060	85	8
30	72	4TG–3072	3TG–3072	2TG–3072	1TG–3072	93	10
30	84	4TG–3084	3TG–3084	2TG–3084	1TG–3084	113	12
30	96	4TG–3096	3TG–3096	2TG–3096	1TG–3096	126	13
30	108	4TG–30108	3TG–30108	2TG–30108	1TG–30108	150	15
30	120	4TG–30120	3TG–30120	2TG–30120	1TG–30120	261	17
30	132	4TG–30132	3TG–30132	2TG–30132	1TG–30132	268	18
30	144	4TG–30144	3TG–30144	2TG–30144	1TG–30144	283	20
36" WIDE							
36	36	4TG–3636	3TG–3636	2TG–3636	1TG–3636	75	6
36	48	4TG–3648	3TG–3648	2TG–3648	1TG–3648	82	8
36	60	4TG–3660	3TG–3660	2TG–3660	1TG–3660	96	10
36	72	4TG–3672	3TG–3672	2TG–3672	1TG–3672	108	12
36	84	4TG–3684	3TG–3684	2TG–3684	1TG–3684	127	14
36	96	4TG–3696	3TG–3696	2TG–3696	1TG–3696	140	16
36	108	4TG–36108	3TG–36108	2TG–36108	1TG–36108	165	18
36	120	4TG–36120	3TG–36120	2TG–36120	1TG–36120	261	20
36	132	4TG–36132	3TG–36132	2TG–36132	1TG–36132	290	22
36	144	4TG–36144	3TG–36144	2TG–36144	1TG–36144	305	24
42" WIDE							
42	48	N.A.	N.A.	2TG–4248	1TG–4248	128	9
42	60	N.A.	N.A.	2TG–4260	1TG–4260	148	12
42	72	N.A.	N.A.	2TG–4272	1TG–4272	170	14
42	84	N.A.	N.A.	2TG–4284	1TG–4284	206	16
42	96	N.A.	N.A.	2TG–4296	1TG–4296	228	19
42	108	N.A.	N.A.	2TG–42108	1TG–42108	260	21
42	120	N.A.	N.A.	2TG–42120	1TG–42120	454	23
42	132	N.A.	N.A.	2TG–42132	1TG–42132	517	26
42	144	N.A.	N.A.	2TG–42144	1TG–42144	532	28

All dimensions are typical (tol. ±½"). • For Accessories and Options see pages TS-5A, TS-5B.

email - sales@aeromfg.com
AERO MANUFACTURING COMPANY • 310 ALLWOOD ROAD, CLIFTON, NEW JERSEY 07012 • VOICE 973473.5300 FAX 973.473.3794

© Copyright 2001 Aero Manufacturing Company, Inc. Specifications subject to change without notice.

Kitchen AERO L Table

June 29, 2015

WORK TABLE

PSX / PSBX / 3TCBX / 3TCV / 3TCBV / 1TCBV SERIES

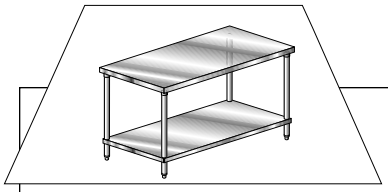

Item#_____Project_____

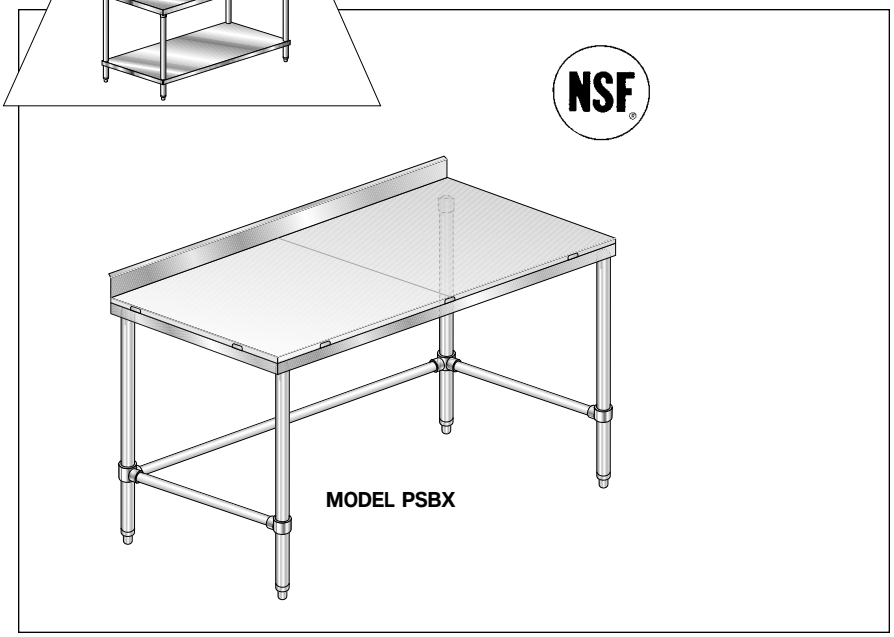

MODEL PSBX

PSX / PSBX

Quantity	FLAT TOP Model #	4" SPLASH Model #
24" WIDE		
____	PSX–2448	PSBX–2448
____	PSX–2460	PSBX–2460
____	PSX–2472	PSBX–2472
____	PSX–2484	PSBX–2484
____	PSX–2496	PSBX–2496
30" WIDE		
____	PSX–3048	PSBX–3048
____	PSX–3060	PSBX–3060
____	PSX–3072	PSBX–3072
____	PSX–3084	PSBX–3084
____	PSX–3096	PSBX–3096

Corner Table

Quantity	AERO Model #
24" WIDE	
____	3TCBX-6060
____	3TCBX-6072
____	3TCBX-6084
____	3TCBX-6096
____	3TCBX-60120
____	3TCBX-60132
____	3TCBX-60144

NOTE: 60" LENGTH STANDARD ONE SIDE – CAN BE EXTENDED TO NO MORE THAN 84".

NOTE: STANDARD WIDTH IS 24".

NOTE: 16 GA 304 STAINLESS STEEL TOP, STAINLESS STEEL CROSSBRACED LEGS.

OPTIONS:
T-180 30" Width
T-181 Additional Length (60" side)
T-182 Stainless Steel Undershelf
T-183 Stainless Steel Enclosed Base

MATERIAL

TOP
- NSF listed heavy duty poly cutting board material.
- PSX–Flat top table. (Crossbracing)
  PSBX–4" Backsplash worktable. (Crossbracing)
- 16 ga. 304 s/s (3TCBX, 3TCV, 3TCBV, 1TCBV models)

SHELF
- 18 gauge stainless steel. (PS, PSB models only)

CROSSBRACING
- $1\frac{1}{4}$" 16 gauge stainless steel tubing, using $1\frac{5}{8}$" I.D. aluminum castings at all intersections. (PSX, PSBX models only)

LEGS
- $1\frac{5}{8}$" O.D. 16 gauge stainless steel tubing, complete with 1" adjustable, impact resistant white metal feet.

DESIGN FEATURES
- Marine edge.(Countertop Only)
- Easily assembled.

CONSTRUCTION
- Heliarc welded construction creates uniform, rock-solid unit.
- Stainless steel gussets fully welded to eliminate damage to table top.
- All tables shipped K.D.

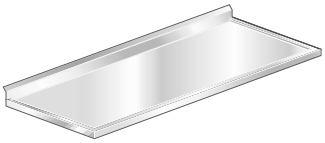

MODEL 3TCBV SHOWN

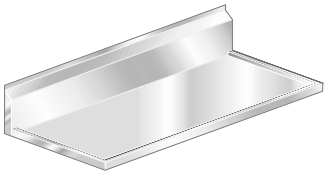

MODEL 1TCBV SHOWN

Counter Top

Quantity	FLAT TOP AERO Model #	4" SPLASH AERO Model #	10" SPLASH AERO Model #
24" WIDE			
____	3TCV-2430	3TCBV-2430	1TCBV-2430
____	3TCV-2436	3TCBV-2436	1TCBV-2436
____	3TCV-2448	3TCBV-2448	1TCBV-2448
____	3TCV-2460	3TCBV-2460	1TCBV-2460
____	3TCV-2472	3TCBV-2472	1TCBV-2472
____	3TCV-2484	3TCBV-2484	1TCBV-2484
____	3TCV-2496	3TCBV-2496	1TCBV-2496
____	3TCV-24120	3TCBV-24120	1TCBV-24120
30" WIDE			
____	3TCV-3030	3TCBV-3030	1TCBV-3030
____	3TCV-3036	3TCBV-3036	1TCBV-3036
____	3TCV-3048	3TCBV-3048	1TCBV-3048
____	3TCV-3060	3TCBV-3060	1TCBV-3060
____	3TCV-3072	3TCBV-3072	1TCBV-3072
____	3TCV-3084	3TCBV-3084	1TCBV-3084
____	3TCV-3096	3TCBV-3096	1TCBV-3096
____	3TCV-30120	3TCBV-30120	1TCBV-30120

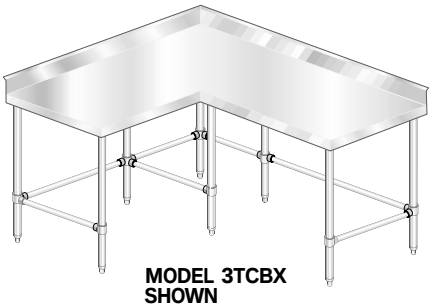

MODEL 3TCBX SHOWN

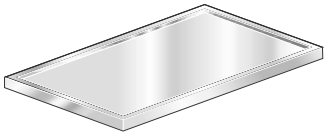

MODEL 3TCV SHOWN

BUILT TO LAST A LIFETIME

email - sales@aeromfg.com
AERO MANUFACTURING COMPANY • 310 ALLWOOD ROAD, CLIFTON, NEW JERSEY 07012 • VOICE 973.473.5300 FAX 973.473.3794

© Copyright 2001 Aero Manufacturing Company, Inc. Specifications subject to change without notice.

DIMENSIONAL SPECIFICATIONS

PSX / PSBX / 3TCBX / 3TCV / 3TCBV / 1TCBV SERIES

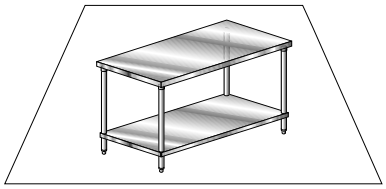

Item#_____Project_____

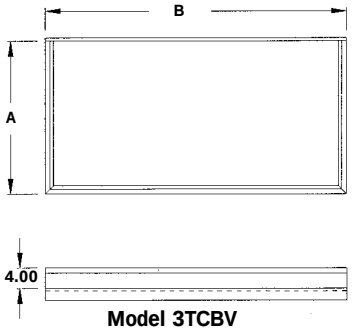

Model 3TCBV

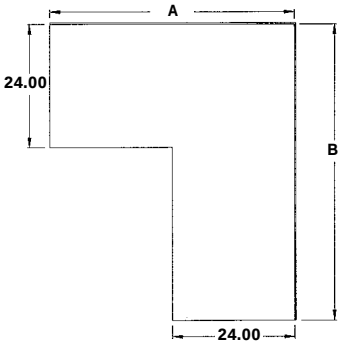

- Tables over 72" in length are shipped with six legs.
- All feet have a full 1" adjustability.

PSX / PSBX

A Width	B Length	FLAT TOP Model #	4" SPLASH Model #	Ship Weight	Cubic Feet
24" WIDE					
24	48	PSX–2448	PSBX–2448	77	23
24	60	PSX–2460	PSBX–2460	89	29
24	72	PSX–2472	PSBX–2472	117	35
24	84	PSX–2484	PSBX–2484	130	41
24	96	PSX–2496	PSBX–2496	141	47
30" WIDE					
30	48	PSX–3048	PSBX–3048	87	29
30	60	PSX–3060	PSBX–3060	101	36
30	72	PSX–3072	PSBX–3072	131	44
30	84	PSX–3084	PSBX–3084	145	51
30	96	PSX–3096	PSBX–3096	160	58

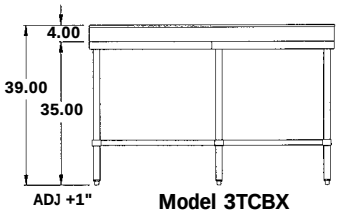

Model 3TCBX

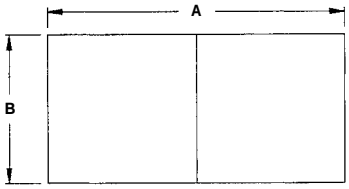

Corner Table

A Width	B Length	AERO Model #	Ship Weight	Cubic Feet
24" WIDE				
60	60	3TCBX-6060	320	25
60	72	3TCBX-6072	360	30
60	84	3TCBX-6084	400	35
60	96	3TCBX-6096	440	40
60	120	3TCBX-60120	520	50
60	132	3TCBX-60132	560	55
60	144	3TCBX-60144	600	60

NSF

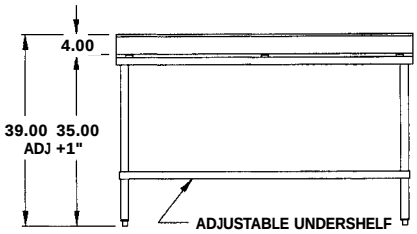

Model PSB

Counter Top

A Width	B Length	FLAT TOP AERO Model #	4" BACKSPLASH AERO Model #	10" BACKSPLASH AERO Model #	Ship Weight	Cubic Feet
24" WIDE						
24	30	3TCV-2430	3TCBV-2430	1TCBV-2430	28	4
24	36	3TCV-2436	3TCBV-2436	1TCBV-2436	39	5
24	48	3TCV-2448	3TCBV-2448	1TCBV-2448	49	6
24	60	3TCV-2460	3TCBV-2460	1TCBV-2460	58	8
24	72	3TCV-2472	3TCBV-2472	1TCBV-2472	68	9
24	84	3TCV-2484	3TCBV-2484	1TCBV-2484	85	11
24	96	3TCV-2496	3TCBV-2496	1TCBV-2496	95	12
24	120	3TCV-24120	3TCBV-24120	1TCBV-24120	140	15
30" WIDE						
30	30	3TCV-3030	3TCBV-3030	1TCBV-3030	38	5
30	36	3TCV-3036	3TCBV-3036	1TCBV-3036	45	6
30	48	3TCV-3048	3TCBV-3048	1TCBV-3048	57	8
30	60	3TCV-3060	3TCBV-3060	1TCBV-3060	69	9
30	72	3TCV-3072	3TCBV-3072	1TCBV-3072	76	11
30	84	3TCV-3084	3TCBV-3084	1TCBV-3084	95	13
30	96	3TCV-3096	3TCBV-3096	1TCBV-3096	107	15
30	120	3TCV-30120	3TCBV-30120	1TCBV-30120	150	20

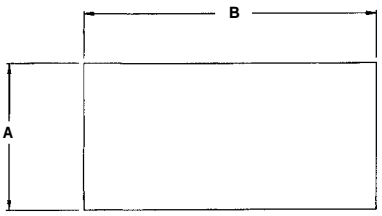

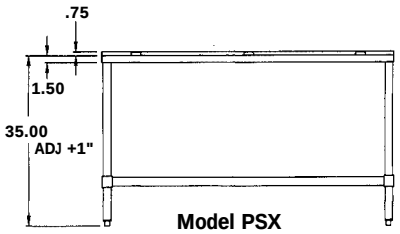

Model PSX

All dimensions are typical (tol. ±½"). • For Accessories and Options see pages TS-5A & TS-5B.

email - sales@aeromfg.com
AERO MANUFACTURING COMPANY • 310 ALLWOOD ROAD, CLIFTON, NEW JERSEY 07012 • VOICE 973.473.5300 FAX 973.473.3794

© Copyright 2001 Aero Manufacturing Company, Inc. Specifications subject to change without notice.

Allsteel Inspire
Conference Chairs

June 29, 2015

Inspire
Statement of Line

Four-Legged Chair

Arms
INST-NGONO

Armless
INST-NGANO

Tablet Arm
INSTT-NGAFRSNO

Overall Dimensions *Arms*	H 34"	W 24¼"	D 22¾"
Overall Dimensions *Armless*	H 34"	W 21¼"	D 22¾"
Seat Dimensions	H 18¼"	W 18⅛"	D 18"
Back Dimensions	H 18¼"	W 18¾"	—
Arms	H 8⅞"	W 20⅜"	D 11"
Tablet Dimensions	H ¾"	W 17½"	D 19¾"
Tablet Clearance	—	—	D 14-15¾"

Sled Chair

Arms
INSL-NONO

Armless
INSL-NANO

Tablet Arm
INSLT-NAFRSNO

Overall Dimensions *Arms*	H 34"	W 24¼"	D 22¾"
Overall Dimensions *Armless*	H 34"	W 21¼"	D 22¾"
Seat Dimensions	H 18¼"	W 18⅛"	D 18"
Back Dimensions	H 18¼"	W 18¾"	—
Arms	H 8⅞"	W 20⅜"	D 11"
Tablet Dimensions	H ¾"	W 17½"	D 19¾"
Tablet Clearance	—	—	D 14-15¾"

Work Chair

Arms
INTK-NONO

Armless
INTK-NANO

Overall Dimensions *Arms*	H 34-39"	W 24½"	D 25"
Overall Dimensions *Armless*	H 34-39"	W 24½"	D 25"
Seat Dimensions	H 17¾-22¾"	W 18⅛"	D 18"
Low-range Cylinder	H 15⅝-18¾"	—	—
Back Dimensions	H 18¼"	W 18¾"	—
Arms	H 8⅞"	W 20⅜"	D 11"

Work Stool

Arms
INWS-NONO

Armless
INWS-NANO

Overall Dimensions *Arms*	H 40¾-50¾"	W 24½"	D 25"
Overall Dimensions *Armless*	H 40¾-50¾"	W 24½"	D 25"
Seat Dimensions	H 24½-34½"	W 18⅛"	D 18"
Back Dimensions	H 18¼"	W 18¾"	—
Arms	H 8⅞"	W 20⅜"	D 11"

Four-Legged Stool

Arms
INFS-NGONO

Armless
INFS-NGANO

Overall Dimensions *Arms*	H 45⅝"	W 24¼"	D 24⅛"
Overall Dimensions *Armless*	H 45⅝"	W 22"	D 24⅛"
Seat Dimensions	H 30"	W 18⅛"	D 18"
Back Dimensions	H 18¼"	W 18¾"	—
Arms	H 8⅞"	W 20⅜"	D 11"

All dimensions stated are without optional seat and back cushions.
Reference price list for additional dimensions and options.

All together now.

At Allsteel, we believe that together, if we widen our view, we can make a real and lasting difference for our environment. That's why we ensure that all materials balance performance and environmental responsibility. Relevant, durable, high-quality products, backed by Allsteel's Lifetime Warranty, guarantee years of use and reuse. For details, visit allsteeloffice.com/alltogethernow.

Allsteel®

Allsteel Inc.
Muscatine, Iowa 52761-5257

allsteeloffice.com

Form # A7996 (06/11) Printed in USA

This FSC-certified paper contains 10% post-consumer recycled content.

©2011 Allsteel Inc.
Allsteel is a registered trademark and Inspire and TriFit are trademarks. Indoor Advantage is a trademark of Scientific Certification Systems. Level is a trademark of BIFMA International.

Allsteel supports green initiatives in the contract furniture industry as a member of the U.S. Green Building Council. Inspire is an SCS Indoor Advantage™ Gold and level™ 2 certified product.

HON

HUDDLE™

Multi-purpose Tables
Nesting Base

SMARTER THAN THE REST

Thoughtful design and clever engineering set Huddle apart from other multi-purpose tables. Huddle tables with nesting bases are equipped with a smart flip-top mechanism for safe and easy motion. Dampened articulation and two convenient locking handles make the process smooth and secure.

SMOOTH
Dampened articulation ensures that tops flip without a hitch—or a crash. The hinge mechanism prevents damage to the tables and protects the safety of the people who set them up and prepare them for storage.

SECURE
The nesting base features double locking latch handles to provide extra security and peace of mind. Lock tabletops in place and rest assured that they'll stay in place until it's time to store tables away again.

EASY
There's no need to dismantle nesting tables for storage. Even the optional modesty panel retracts when tables are nested.

PRODUCTS, MATERIALS, AND FINISHES SHOWN:

A: Huddle multi-purpose tabletop in Morro Zephyr with edgeband in Platinum, nesting base and modesty panel in Platinum Metallic. Perpetual® Nesting chair in Attire Ivy.

AVAILABLE
The Huddle nesting base is available for all worksurface sizes; 30", 24", even 18" tables can be equipped for fast and easy storage.

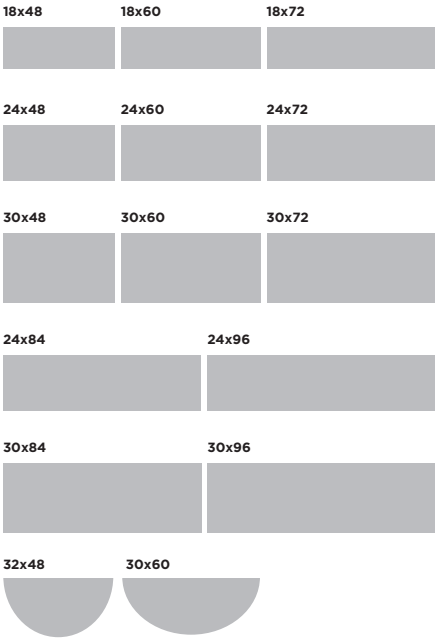

SCS CERTIFIED INDOOR ADVANTAGE GOLD
SCIENTIFIC CERTIFICATION SYSTEMS
For all Huddle multi-purpose table components except knife edge tabletops.

The HON Company
200 Oak Street
Muscatine, IA 52761
800.833.3964
hon.com

© 2010 The HON Company. Form No. H3817 (1/10)
HON and Perpetual are registered trademarks of HNI Technologies, under license to The HON Company. Huddle is a trademark of The HON Company. Models, upholstery, and finishes are subject to change without notice.

Armstrong Acoustic Sound Baffles 6605

June 29, 2015

SOUNDSOAK® Acoustical Baffles

BioAcoustic™ & Fiberglass

Inspiring Great Spaces™

Armstrong®

CEILING & WALL SYSTEMS

SOUNDSOAK® Acoustical Baffles

BioAcoustic™ & Fiberglass

FSC www.fsc.org FSC® C007626 The mark of responsible forestry

RAINFOREST ALLIANCE CERTIFIED

USDA CERTIFIED BIOBASED PRODUCT PRODUCT 100% FP

Soundsoak Baffles 24" x 48" with Eye Hooks and Square Edges in FR-701 Silver Papier, Blue Plum, and Deep Burgundy fabrics; Custom Soundsoak Walls in Silver Papier Martin Luther King Elementary, Lancaster, PA

Visit Armstrong.com Photo Gallery to view more installation photos

SEARCH: baffles

BioAcoustic core used in Soundsoak

KEY SELECTION ATTRIBUTES

- Soundsoak with BioAcoustic core has a 44% rapidly renewable substrate made from jute, a plant that grows from seed to harvest in 100 days, and can contribute to LEED® credits (Rapidly Renewable and Acoustics)
- 100% post-consumer woven fabrics coordinate with Soundsoak Walls and Diffusers
- On average, one baffle per 40 square feet, or 20% coverage, reduces reverberation time by approximately 50%
- Seismic approved
- Easy to install with sleek, adjustable aircraft cable hanging kit
- Additional colors, sizes, and edge details available as custom options; contact Architectural Specialties at 1 877 ARMSTRONG, select options 1-1-4

WOVEN FABRIC SURFACE - BIOACOUSTIC & FIBERGLASS CORES

FR-701

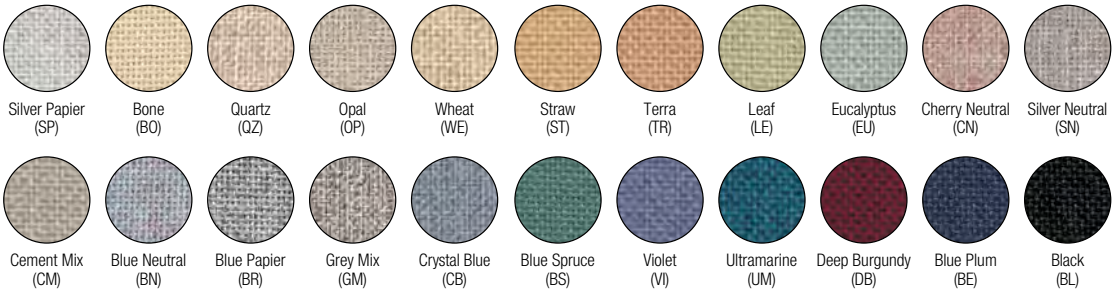

Silver Papier (SP), Bone (BO), Quartz (QZ), Opal (OP), Wheat (WE), Straw (ST), Terra (TR), Leaf (LE), Eucalyptus (EU), Cherry Neutral (CN), Silver Neutral (SN)

Cement Mix (CM), Blue Neutral (BN), Blue Papier (BR), Grey Mix (GM), Crystal Blue (CB), Blue Spruce (BS), Violet (VI), Ultramarine (UM), Deep Burgundy (DB), Blue Plum (BE), Black (BL)

SAILCLOTH FABRIC SURFACE - FIBERGLASS CORE ONLY

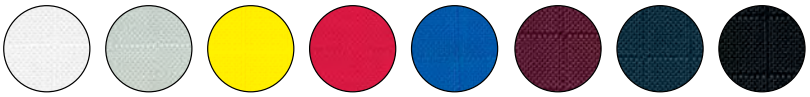

White (SCWE), Silver (SCSR), Yellow (SCYW), Red (SCRD), Royal (SCRL), Maroon (SCMN), Navy (SCNY), Black (SCBK)

Pictured on cover: Soundsoak Baffles Custom Panel Sizes in Sailcloth Yellow, Navy Blue, and Silver; Northern Rockies Regional Recreation Centre, Fort Nelson, British Columbia

In addition to these standard options, there are more finish, size, and curved design choices available as custom options. Contact Armstrong Architectural Specialties for details at 1 877 ARMSTRONG and select prompts 1-1-4.

TechLine℠ 877 ARMSTRONG

armstrong.com/baffles

Armstrong®

SOUNDSOAK® Acoustical Baffles

BioAcoustic™ & Fiberglass

ACOUSTICAL PERFORMANCE

EXPOSED STRUCTURE VS. PARTIAL COVERAGE WITH SOUNDSOAK BAFFLES

CEILING	None Exposed Structure	Exposed Structure with 80% Acoustical Deck Treatment*	20% Soundsoak Fiberglass Baffles Item 6607 (125 - 2' x 4')	20% Soundsoak BioAcoustic™ Baffles Item 6606 (125 - 2' x 4')	50% Soundsoak Fiberglass Baffles Item 6607 (312 - 2' x 4')	50% Soundsoak BioAcoustic Baffles Item 6606 (312 - 2' x 4')	Optima Ceiling Continuous 10' H
Reverberation time(s)	3.4s	2.26s	1.20s	1.67s	0.61s	0.95s	0.49
RT reduction (%)	–	34%	65%	51%	82%	72%	86%
SPL reduction (dB)	–	1.1dB	3.1dB	2.3dB	5.6dB	4.3dB	6.3dB

* Acoustical deck treatment is 1.5" thick with an NRC of 0.55.

SOUND ABSORPTION IN SABIN

The Sabin is the unit of total sound absorption provided by an object. This is the preferred metric for "space absorbers" such as clouds, canopies, or baffles installed within an architectural space.

Soundsoak® Baffles provide greater sound absorption than a continuous ceiling of the same surface area because the sound is absorbed from both the front and back surfaces.

The installation of Soundsoak Baffles in a reverberant space can significantly reduce the background noise and reverberation time, enhancing speech intelligibility.

EXPOSED STRUCTURE

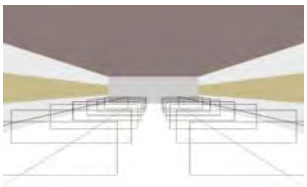

5000 SF Exposed Structure
(50' x 100') Space

125 SOUNDSOAK BAFFLES

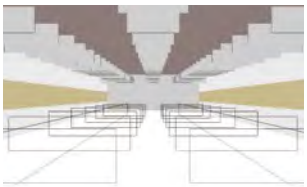

Ceiling Height: 15' to Deck

FULL OPTIMA® CEILING

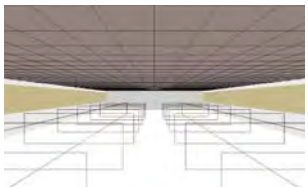

Drywall Walls, with windows on
2 sides, and commercial carpet

CASE STUDY

Project: Martin Luther King Elementary School
Location: Lancaster, PA
Product: Soundsoak Baffles and Walls

Problem: Classroom suffered acoustically from both high reverberation time and high levels of background noise.

Situation: Exposed structure, cinderblock walls, carpeted floors.

Solution: Installation of fabric-covered Soundsoak Baffles and Walls reduced reverberation time in the space by 27% to 0.56 seconds, which meets the ANSI S12.60-2010 Classroom Standard.

- 16 Soundsoak Baffles
- 96 square feet of Soundsoak wall panels installed five feet from the roof deck on the back and side walls

For more information, visit armstrong.com/baffles.

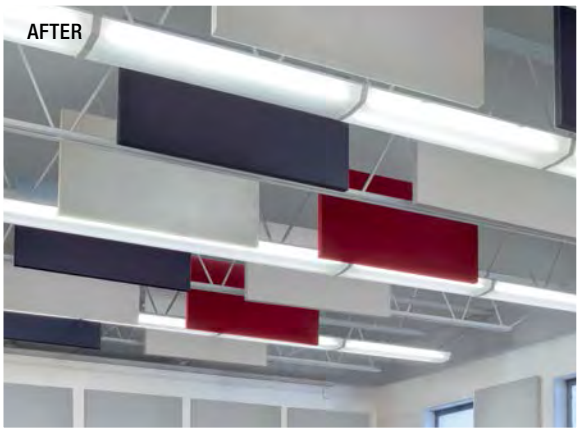

Soundsoak Baffles 2' x 4' in FR-701 fabrics; Custom Soundsoak Walls 3.5' x 3.5' with Mineral Fiber substrate and Square Edge in FR-701 Silver Papier fabric.

SOUNDSOAK® Acoustical Baffles

BioAcoustic™ & Fiberglass

UP TO 52% RECYCLED CONTENT

LEED® acoustics ✓ energy daylight & views ✓ indoor air quality ✓ renewable materials ✓ recycled content ✓ waste mgmt ✓ local* materials ✓

Calculate LEED contribution at armstrong.com/greengenie *LOCATION DEPENDENT

VISUAL SELECTION

Item No.*	Description	Dimensions Nominal W x L x H	Mounting
SOUNDSOAK Baffles			
6605 _ _	Fabric-wrapped Square Edge with **Fiberglass core**	2' x 4' x 2"	Eye Hooks
6606 _ _	Fabric-wrapped Square Edge with **BioAcoustic core**	2' x 47-1/2" x 1-1/4"	Eye Hooks
6607_ _ _ _	Sailcloth Nylon Stitched Sealed Edge with **Fiberglass core**	2' x 4' x 1-1/2"	Grommets

* When specifying or ordering, include 2- or 4-letter color suffix.

ACCESSORIES

5670	Baffle Hanging Kit (2 cables, 2 carabiners, and 2 adjusters)	1/16" x 8' (cable)

INSTALLATION OPTIONS

Hanging Kit

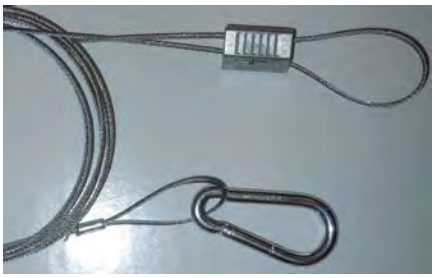

Eye Hook Mounting

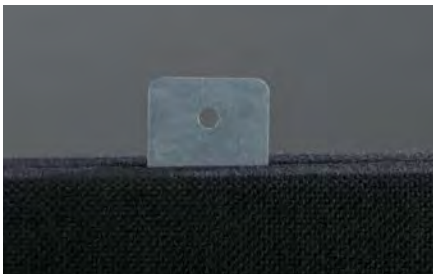

Grommet Mounting

CUSTOM SOUNDSOAK BAFFLES

- Edge detail (square, beveled, radiused, mitered, stitched)
- Sizes up to 4' x 8' for fiberglass core; for custom BioAcoustic panels, contact the Architectural Specialties project management team at 1 877 ARMSTRONG, select options 1-1-4
- Thickness 1" to 2"

- Customer-specific fabrics can be considered from manufacturers like:
  - Guilford of Maine: www.guilfordofmaine.com
  - Maharam: www.maharam.com
  - Designtex: www.designtex.com
  - Carnegie: www.carnegiefabrics.com
  - Knoll: www.knolltextiles.com
  - Hytex: www.hytex.com

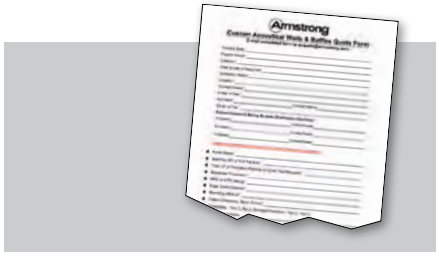

Use our online Custom Selection Form at armstrong.com/baffles, and we will create baffles to your specifications.

PHYSICAL DATA

Material
Rigid fiberglass core or BioAcoustic core

Surface Finish

Nylon or fabric

Fire Performance
6605 - Tested in accordance with ASTM E84 – 25/200; Composite Class A rating per IBC (fabric, substrate, etc.); Tested to CAN/ULC S102 – 25/250
6606 - Tested in accordance with ASTM E84 – 25/200. Composite Class A rating per IBC (fabric, substrate, etc.)
6607 - Tested in accordance with ASTM E84 – 25/200. Composite Class A rating per IBC (fabric, substrate, etc.)

Seismic Installation
These systems have been engineered, tested, and meet the requirements for ceiling applications in Seismic Design Categories D, E, and F

Acoustical Performance
6605 – 1.8 Sabins per square foot
6606 – 1.14 Sabins per square foot
6607 – 1.19 Sabins per square foot

Design Considerations
Soundsoak Baffles, as with other architectural features located in the ceiling plane, may obstruct or skew the existing or planned fire sprinkler water distribution pattern, or possibly delay the activation of the fire sprinkler or fire detection system. Designers and installers are advised to consult a fire protection engineer, NFPA 13, and their local codes for guidance on the proper installation techniques where fire detection or suppression systems are present.

Seismic Restraint*
The International Building Code allows architectural components to swing freely as long as they will not be damaged or cause damage. Baffles suspended will swing no more than 18" in any direction for each panel.

** Pendulum reaction information is based on full-scale testing and computer modeling conducted at the Structural Engineering Earthquake Simulation Lab located at the State University of New York at Buffalo.*

Installation Consideration
Cutting baffles is not recommended. Do not attach carabiner to BioAcoustic baffle grommet.

Warranty
One (1) year limited warranty.
Details: armstrong.com/warranty

Weight/Square Feet
Bulk packaged per order
6605 – 14 lbs. per Baffle
6606 – 7 lbs. per Baffle
6607 – 10 lbs. per Baffle

TechLine℠ / 1 877 ARMSTRONG
armstrong.com/baffles

BPCS-4317-1214

LEED® is a registered trademark of the U.S. Green Building Council
All other trademarks used herein are the property of AWI Licensing Company and/or its affiliates © 2014 AWI Licensing Company
Printed in the United States of America

Armstrong®

CLOUDS & CANOPIES

Sherwin Williams
Concrete Paint

June 29, 2015

Protective & Marine Coatings

MACROPOXY® 646 FAST CURE EPOXY

PART A	B58-600	SERIES
PART B	B58V600	HARDENER

Revised: March 9, 2015

PRODUCT INFORMATION

4.53

PRODUCT DESCRIPTION

MACROPOXY 646 FAST CURE EPOXY is a high solids, high build, fast drying, polyamide epoxy designed to protect steel and concrete in industrial exposures. Ideal for maintenance painting and fabrication shop applications. The high solids content ensures adequate protection of sharp edges, corners, and welds. This product can be applied directly to marginally prepared steel surfaces.

- Low VOC
- Low odor
- Chemical resistant
- Abrasion resistant
- Outstanding application properties
- Meets Class A requirements for Slip Coefficient, 0.36 @ 6 mils / 150 microns dft (Mill White only)

PRODUCT CHARACTERISTICS

Finish:	Semi-Gloss
Color:	Mill White, Black and a wide range of colors available through tinting
Volume Solids:	72% ± 2%, mixed, Mill White
Weight Solids:	85% ± 2%, mixed, Mill White
VOC (EPA Method 24): mixed	Unreduced: <250 g/L; 2.08 lb/gal Reduced 10%: <300 g/L; 2.50 lb/gal
Mix Ratio:	1:1 by volume

Recommended Spreading Rate per coat:

	Minimum		Maximum	
Wet mils (microns)	**7.0**	(175)	**13.5**	(338)
Dry mils (microns)	**5.0***	(125)	**10.0***	(250)
~Coverage sq ft/gal (m^2/L)	**116**	(2.8)	**232**	(5.7)
Theoretical coverage **sq ft/gal** (m^2/L) @ 1 mil / 25 microns dft	**1152**	(28.2)		

***May be applied at 3.0-10.0 mils (75-250 microns) dft as an intermediate coat in a multi-coat system. Refer to Recommended Systems (page 2). See Performance Tips section also.**

NOTE: Brush or roll application may require multiple coats to achieve maximum film thickness and uniformity of appearance.

Drying Schedule @ 7.0 mils wet (175 microns):

	@ 35°F/1.7°C	@ 77°F/25°C *50% RH*	@ 100°F/38°C
To touch:	4-5 hours	2 hours	1.5 hours
To handle:	48 hours	8 hours	4.5 hours
To recoat:			
minimum:	48 hours	8 hours	4.5 hours
maximum:	1 year	1 year	1 year
To cure:			
Service:	10 days	7 days	4 days
Immersion:	14 days	7 days	4 days

If maximum recoat time is exceeded, abrade surface before recoating. Drying time is temperature, humidity, and film thickness dependent.
Paint temperature must be at least 40°F (4.5°C) minimum.

Pot Life:	10 hours	4 hours	2 hours
Sweat-in-time:	30 minutes	30 minutes	15 minutes

When used as an intermediate coat as part of a multi-coat system:

Drying Schedule @ 5.0 mils wet (125 microns):

	@ 35°F/1.7°C	@ 77°F/25°C *50% RH*	@ 100°F/38°C
To touch:	3 hours	1 hour	1 hour
To handle:	48 hours	4 hours	2 hours
To recoat:			
minimum:	16 hours	4 hours	2 hours
maximum:	1 year	1 year	1 year

PRODUCT CHARACTERISTICS (CONT'D)

Shelf Life:	36 months, unopened Store indoors at 40°F (4.5°C) to 110°F (43°C).
Flash Point:	91°F (33°C), TCC, mixed
Reducer/Clean Up:	Reducer, R7K15
In California:	Reducer R7K111 or Oxsol 100

PERFORMANCE CHARACTERISTICS

Substrate*: Steel
Surface Preparation*: SSPC-SP10/NACE 2
System Tested*:
1 ct. Macropoxy 646 Fast Cure @ 6.0 mils (150 microns) dft
*unless otherwise noted below

Test Name	Test Method	Results
Abrasion Resistance	ASTM D4060, CS17 wheel, 1000 cycles, 1 kg load	84 mg loss
Accelerated Weathering-QUV[1]	ASTM D4587, QUV-A, 12,000 hours	Passes
Adhesion	ASTM D4541	1,037 psi
Corrosion Weathering[1]	ASTM D5894, 36 cycles, 12,000 hours	Rating 10 per ASTM D714 for blistering; Rating 9 per ASTM D610 per rusting
Nuclear Decontamination	ASTM D4256/ANSI N 5.12	99% Water Wash; 95% Overall
Direct Impact Resistance[2]	ASTM D2794	120 in. lb.
Dry Heat Resistance	ASTM D2485	250°F (121°C)
Exterior Durability	1 year at 45° South	Excellent, chalks
Flexibility	ASTM D522, 180° bend, 3/4" mandrel	Passes
Fuel Contribution	NFPA 259	5764 btu/lb
Humidity Resistance	ASTM D4585, 6000 hours	No blistering, cracking, or rusting
Immersion	1 year fresh and salt water	Passes, no rusting, blistering, or loss of adhesion
Radiation Tolerance	ASTM D4082 / ANSI 5.12	Pass at 21 mils (525 microns)
Pencil Hardness	ASTM D3363	3H
Salt Fog Resistance[1]	ASTM B117, 6,500 hours	Rating 10 per ASTM D610 for rusting; Rating 9 per ASTM D1654 for corrosion
Slip Coefficient, Mill White*	AISC Specification for Structural Joints Using ASTM A325 or ASTM A490 Bolts	Class A, 0.36
Surface Burning	ASTM E84/NFPA 255	Flame Spread Index 20; Smoke Development Index 35 (at 18 mils or 450 microns)
Water Vapor Permeance	ASTM D1653, Method B	1.16 US perms

Epoxy coatings may darken or discolor following application and curing.

*Refer to Slip Certification document

Footnotes:
[1] *Zinc Clad II Plus Primer*
[2] *Two coats of* Macropoxy 646 Fast Cure Epoxy

DISCLAIMER

The information and recommendations set forth in this Product Data Sheet are based upon tests conducted by or on behalf of The Sherwin-Williams Company. Such information and recommendations set forth herein are subject to change and pertain to the product offered at the time of publication. Consult your Sherwin-Williams representative to obtain the most recent Product Data Information and Application Bulletin.

continued on back

Protective & Marine Coatings

MACROPOXY® 646 FAST CURE EPOXY

PART A	B58-600	SERIES
PART B	B58V600	HARDENER

Revised: March 9, 2015

PRODUCT INFORMATION

4.53

RECOMMENDED USES

- Marine applications
- Fabrication shops
- Pulp and paper mills
- Power plants
- Offshore platforms
- Nuclear Power Plants
- Nuclear fabrication shops
- Refineries
- Chemical plants
- Tank exteriors
- Water treatment plants
- DOE Nuclear Fuel Facilities
- DOE Nuclear Weapons Facilities
- Mill White and Black are acceptable for immersion use for salt water and fresh water, not acceptable for potable water
- Suitable for use in USDA inspected facilities
- Acceptable for use in Canadian Food Processing facilities, categories: D1, D2, D3 (Confirm acceptance of specific part numbers/rexes with your SW Sales Representative)
- Conforms to AWWA D102 OCS #5
- Conforms to MPI # 108
- This product meets specific design requirements for non-safety related nuclear plant applications in Level II, III and Balance of Plant, and DOE nuclear facilities*.

* Nuclear qualifications are NRC license specific to the facility.

- Suitable for use in the Mining & Minerals Industry

RECOMMENDED SYSTEMS

		Dry Film Thickness / ct. Mils	(Microns)
Immersion and atmospheric:			
Steel:			
2 cts.	Macropoxy 646 Fast Cure Epoxy	5.0-10.0	(125-250)
Concrete/Masonry, smooth:			
2 cts.	Macropoxy 646 Fast Cure Epoxy	5.0-10.0	(125-250)
Concrete Block:			
1 ct.	Kem Cati-Coat HS Epoxy Filler/Sealer *as needed to fill voids and provide a continuous substrate.*	10.0-20.0	(250-500)
2 cts.	Macropoxy 646 Fast Cure Epoxy	5.0-10.0	(125-250)
Atmospheric:			
Steel: (Shop applied system, new construction, AWWA D102, can also be used at 3 mils / 75 microns minimum dft when used as an intermediate coat as part of a multi-coat system)			
1 ct.	Macropoxy 646 Fast Cure Epoxy	3.0-6.0	(75-150)
1-2 cts.	of recommended topcoat		
Steel:			
1 ct.	Recoatable Epoxy Primer	4.0-6.0	(100-150)
2 cts.	Macropoxy 646 Fast Cure Epoxy	5.0-10.0	(125-250)
Steel:			
1 ct.	Macropoxy 646 Fast Cure Epoxy	5.0-10.0	(125-250)
1-2 cts.	Acrolon 218 Polyurethane	3.0-6.0	(75-150)
or	Hi-Solids Polyurethane	3.0-5.0	(75-125)
or	SherThane 2K Urethane	2.0-4.0	(50-100)
or	Hydrogloss	2.0-4.0	(50-100)
Steel:			
2 cts.	Macropoxy 646 Fast Cure Epoxy	5.0-10.0	(125-250)
1-2 cts.	Tile-Clad HS Epoxy	2.5-4.0	(63-100)
Steel:			
1 ct.	Zinc Clad II Plus	2.0-4.0	(50-100)
1 ct.	Macropoxy 646 Fast Cure Epoxy	5.0-10.0	(125-250)
1-2 cts.	Acrolon 218 Polyurethane	3.0-6.0	(75-150)
Steel:			
1 ct.	Zinc Clad III HS	3.0-5.0	(75-125)
or	Zinc Clad IV	3.0-5.0	(75-125)
1 ct.	Macropoxy 646 Fast Cure Epoxy	3.0-10.0	(75-250)
1-2 cts.	Acrolon 218 Polyurethane	3.0-6.0	(75-150)
Aluminum:			
2 cts.	Macropoxy 646 Fast Cure Epoxy	5.0-10.0	(125-250)
Galvanizing:			
2 cts.	Macropoxy 646 Fast Cure Epoxy	5.0-10.0	(125-250)
FIRETEX ONLY:			
Steel & Galvanized Substrates being primed for FIRETEX only:			
1 ct.	Macropoxy 646 Fast Cure Epoxy	2.0-5.0	(50-125)

The systems listed above are representative of the product's use, other systems may be appropriate.

SURFACE PREPARATION

Surface must be clean, dry, and in sound condition. Remove all oil, dust, grease, dirt, loose rust, and other foreign material to ensure adequate adhesion.

Refer to product Application Bulletin for detailed surface preparation information.

Minimum recommended surface preparation:

Iron & Steel

Atmospheric:	SSPC-SP2/3
Immersion:	SSPC-SP10/NACE 2, 2-3 mil (50-75 micron) profile
Aluminum:	SSPC-SP1
Galvanizing:	SSPC-SP1; See Surface Preparations section on page 3 for application of FIRETEX intumescent coating systems

Concrete & Masonry

Atmospheric:	SSPC-SP13/NACE 6, or ICRI No. 310.2R, CSP 1-3
Immersion:	SSPC-SP13/NACE 6-4.3.1 or 4.3.2, or ICRI No. 310.2R, CSP 2-4

Surface Preparation Standards

	Condition of Surface	ISO 8501-1 BS7079:A1	Swedish Std. SIS055900	SSPC	NACE
White Metal		Sa 3	Sa 3	SP 5	1
Near White Metal		Sa 2.5	Sa 2.5	SP 10	2
Commercial Blast		Sa 2	Sa 2	SP 6	3
Brush-Off Blast		Sa 1	Sa 1	SP 7	4
Hand Tool Cleaning	Rusted	C St 2	C St 2	SP 2	-
	Pitted & Rusted	D St 2	D St 2	SP 2	-
Power Tool Cleaning	Rusted	C St 3	C St 3	SP 3	-
	Pitted & Rusted	D St 3	D St 3	SP 3	-

TINTING

Tint Part A with Maxitoners at 150% strength. Five minutes minimum mixing on a mechanical shaker is required for complete mixing of color.

Tinting is not recommended for immersion service.

APPLICATION CONDITIONS

Temperature:	35°F (1.7°C) minimum, 120°F (49°C) maximum (air and surface) 40°F (4.5°C) minimum, 120°F (49°C) maximum (material) At least 5°F (2.8°C) above dew point
Relative humidity:	85% maximum

Refer to product Application Bulletin for detailed application information.

ORDERING INFORMATION

Packaging:

Part A:	1 gallon (3.78L) and 5 gallon (18.9L) containers
Part B:	1 gallon (3.78L) and 5 gallon (18.9L) containers

Weight: 12.9 ± 0.2 lb/gal ; 1.55 Kg/L mixed, may vary by color

SAFETY PRECAUTIONS

Refer to the MSDS sheet before use.

Published technical data and instructions are subject to change without notice. Contact your Sherwin-Williams representative for additional technical data and instructions.

WARRANTY

The Sherwin-Williams Company warrants our products to be free of manufacturing defects in accord with applicable Sherwin-Williams quality control procedures. Liability for products proven defective, if any, is limited to replacement of the defective product or the refund of the purchase price paid for the defective product as determined by Sherwin-Williams. NO OTHER WARRANTY OR GUARANTEE OF ANY KIND IS MADE BY SHERWIN-WILLIAMS, EXPRESSED OR IMPLIED, STATUTORY, BY OPERATION OF LAW OR OTHERWISE, INCLUDING MERCHANTABILITY AND FITNESS FOR A PARTICULAR PURPOSE.

Protective & Marine Coatings

MACROPOXY® 646 FAST CURE EPOXY

PART A	B58-600	SERIES
PART B	B58V600	HARDENER

Revised: March 9, 2015

APPLICATION BULLETIN

4.53

SURFACE PREPARATIONS

Surface must be clean, dry, and in sound condition. Remove all oil, dust, grease, dirt, loose rust, and other foreign material to ensure adequate adhesion.

Iron & Steel, Atmospheric Service:
Minimum surface preparation is Hand Tool Clean per SSPC-SP2. Remove all oil and grease from surface by Solvent Cleaning per SSPC-SP1. For better performance, use Commercial Blast Cleaning per SSPC-SP6/NACE 3, blast clean all surfaces using a sharp, angular abrasive for optimum surface profile (2 mils / 50 microns). Prime any bare steel within 8 hours or before flash rusting occurs.

Iron & Steel, Immersion Service:
Remove all oil and grease from surface by Solvent Cleaning per SSPC-SP1. Minimum surface preparation is Near White Metal Blast Cleaning per SSPC-SP10/NACE 2. Blast clean all surfaces using a sharp, angular abrasive for optimum surface profile (2-3 mils / 50-75 microns). Remove all weld spatter and round all sharp edges by grinding. Prime any bare steel the same day as it is cleaned.

Aluminum
Remove all oil, grease, dirt, oxide and other foreign material by Solvent Cleaning per SSPC-SP1.

Galvanized Steel
Allow to weather a minimum of six months prior to coating. Solvent Clean per SSPC-SP1 (recommended solvent is VM&P Naphtha). When weathering is not possible, or the surface has been treated with chromates or silicates, first Solvent Clean per SSPC-SP1 and apply a test patch. Allow paint to dry at least one week before testing adhesion. If adhesion is poor, brush blasting per SSPC-SP7 is necessary to remove these treatments. Rusty galvanizing requires a minimum of Hand Tool Cleaning per SSPC-SP2, prime the area the same day as cleaned.
In preparing galvanized steel substrates for the application of FIRE-TEX intumescent coating systems, Surface Preparation Specification SSPC-SP 16 must be followed obtaining a surface profile of minimum 1.5 mils (38 microns). Optimum surface profile will not exceed 2.0 mils (50 microns).

Concrete and Masonry
For surface preparation, refer to SSPC-SP13/NACE 6, or ICRI No. 310.2R, CSP 1-3. Surfaces should be thoroughly clean and dry. Concrete and mortar must be cured at least 28 days @ 75°F (24°C). Remove all loose mortar and foreign material. Surface must be free of laitance, concrete dust, dirt, form release agents, moisture curing membranes, loose cement and hardeners. Fill bug holes, air pockets and other voids with Steel-Seam FT910.

Concrete, Immersion Service:
For surface preparation, refer to SSPC-SP13/NACE 6, Section 4.3.1 or 1.3.2 or ICRI No. 310.2R, CSP 2-4.

Follow the standard methods listed below when applicable:
ASTM D4258 Standard Practice for Cleaning Concrete.
ASTM D4259 Standard Practice for Abrading Concrete.
ASTM D4260 Standard Practice for Etching Concrete.
ASTM F1869 Standard Test Method for Measuring Moisture Vapor Emission Rate of Concrete.
SSPC-SP 13/Nace 6 Surface Preparation of Concrete.
ICRI No. 310.2R Concrete Surface Preparation.

Previously Painted Surfaces
If in sound condition, clean the surface of all foreign material. Smooth, hard or glossy coatings and surfaces should be dulled by abrading the surface. Apply a test area, allowing paint to dry one week before testing adhesion. If adhesion is poor, or if this product attacks the previous finish, removal of the previous coating may be necessary. If paint is peeling or badly weathered, clean surface to sound substrate and treat as a new surface as above.

Surface Preparation Standards

	Condition of Surface	ISO 8501-1 BS7079:A1	Swedish Std. SIS055900	SSPC	NACE
White Metal		Sa 3	Sa 3	SP 5	1
Near White Metal		Sa 2.5	Sa 2.5	SP 10	2
Commercial Blast		Sa 2	Sa 2	SP 6	3
Brush-Off Blast		Sa 1	Sa 1	SP 7	4
Hand Tool Cleaning	Rusted	C St 2	C St 2	SP 2	-
	Pitted & Rusted	D St 2	D St 2	SP 2	-
Power Tool Cleaning	Rusted	C St 3	C St 3	SP 3	-
	Pitted & Rusted	D St 3	D St 3	SP 3	-

APPLICATION CONDITIONS

Temperature:	35°F (1.7°C) minimum, 120°F (49°C) maximum (air and surface) 40°F (4.5°C) minimum, 120°F (49°C) maximum (material) At least 5°F (2.8°C) above dew point
Relative humidity:	85% maximum

APPLICATION EQUIPMENT

The following is a guide. Changes in pressures and tip sizes may be needed for proper spray characteristics. Always purge spray equipment before use with listed reducer. Any reduction must be compliant with existing VOC regulations and compatible with the existing environmental and application conditions.

Reducer/Clean Up .....Reducer R7K15
In California.....Reducer R7K111

Airless Spray
Pump.....30:1
Pressure.....2800 - 3000 psi
Hose.....1/4" ID
Tip.....017" - .023"
Filter.....60 mesh
Reduction.....As needed up to 10% by volume

Conventional Spray
Gun.....DeVilbiss MBC-510
Fluid Tip.....E
Air Nozzle.....704
Atomization Pressure.....60-65 psi
Fluid Pressure.....10-20 psi
Reduction.....As needed up to 10% by volume
Requires oil and moisture separators

Brush
Brush.....Nylon/Polyester or Natural Bristle
Reduction.....As needed up to 10% by volume

Roller
Cover.....3/8" woven with solvent resistant core
Reduction.....As needed up to 10% by volume

Plural Component Spray...Acceptable
Refer to April 2010 Technical Bulletin - "Application Guidelines for Macropoxy 646 Fast Cure Epoxy & Recoatable Epoxy Primer Utilizing Plural Component Equipment"
If specific application equipment is not listed above, equivalent equipment may be substituted.

continued on back

Protective & Marine Coatings

MACROPOXY® 646 FAST CURE EPOXY

PART A	B58-600	SERIES
PART B	B58V600	HARDENER

Revised: March 9, 2015

APPLICATION BULLETIN

4.53

APPLICATION PROCEDURES

Surface preparation must be completed as indicated.

Mix contents of each component thoroughly with low speed power agitation. Make certain no pigment remains on the bottom of the can. Then combine one part by volume of Part A with one part by volume of Part B. Thoroughly agitate the mixture with power agitation. Allow the material to sweat-in as indicated prior to application. Re-stir before using.

If reducer solvent is used, add only after both components have been thoroughly mixed, after sweat-in.

Apply paint at the recommended film thickness and spreading rate as indicated below:

Recommended Spreading Rate per coat:

	Minimum		Maximum	
Wet mils (microns)	**7.0**	(175)	**13.5**	(338)
Dry mils (microns)	**5.0***	(125)	**10.0***	(250)
~Coverage sq ft/gal (m^2/L)	**116**	(2.8)	**232**	(5.7)
Theoretical coverage **sq ft/gal** (m^2/L) @ 1 mil / 25 microns dft	**1152**	(28.2)		

***May be applied at 3.0-10.0 mils (75-250 microns) dft in atmospheric conditions. Refer to Recommended Systems (page 2). See Performance Tips section also.**

NOTE: Brush or roll application may require multiple coats to achieve maximum film thickness and uniformity of appearance.

Drying Schedule @ 7.0 mils wet (175 microns):

	@ 35°F/1.7°C	@ 77°F/25°C *50% RH*	@ 100°F/38°C
To touch:	4-5 hours	2 hours	1.5 hours
To handle:	48 hours	8 hours	4.5 hours
To recoat:			
minimum:	48 hours	8 hours	4.5 hours
maximum:	1 year	1 year	1 year
To cure:			
Service:	10 days	7 days	4 days
Immersion:	14 days	7 days	4 days

If maximum recoat time is exceeded, abrade surface before recoating.

Drying time is temperature, humidity, and film thickness dependent.

Paint temperature must be at least 40°F (4.5°C) minimum.

Pot Life:	10 hours	4 hours	2 hours
Sweat-in-time:	30 minutes	30 minutes	15 minutes

When used as an intermediate coat as part of a multi-coat system:

Drying Schedule @ 5.0 mils wet (125 microns):

	@ 35°F/1.7°C	@ 77°F/25°C *50% RH*	@ 100°F/38°C
To touch:	3 hours	1 hour	1 hour
To handle:	48 hours	4 hours	2 hours
To recoat:			
minimum:	16 hours	4 hours	2 hours
maximum:	1 year	1 year	1 year

Application of coating above maximum or below minimum recommended spreading rate may adversely affect coating performance.

CLEAN UP INSTRUCTIONS

Clean spills and spatters immediately with Reducer R7K15. Clean tools immediately after use with Reducer R7K15. In California use Reducer R7K111. Follow manufacturer's safety recommendations when using any solvent.

PERFORMANCE TIPS

Stripe coat all crevices, welds, and sharp angles to prevent early failure in these areas.

When using spray application, use a 50% overlap with each pass of the gun to avoid holidays, bare areas, and pinholes. If necessary, cross spray at a right angle

Spreading rates are calculated on volume solids and do not include an application loss factor due to surface profile, roughness or porosity of the surface, skill and technique of the applicator, method of application, various surface irregularities, material lost during mixing, spillage, overthinning, climatic conditions, and excessive film build.

Excessive reduction of material can affect film build, appearance, and adhesion.

Do not mix previously catalyzed material with new.

Do not apply the material beyond recommended pot life.

In order to avoid blockage of spray equipment, clean equipment before use or before periods of extended downtime with Reducer R7K15. In California use Reducer R7K111.

Tinting is not recommended for immersion service.

Use only Mill White and Black for immersion service.

Insufficient ventilation, incomplete mixing, miscatalyzation, and external heaters may cause premature yellowing.

Excessive film build, poor ventilation, and cool temperatures may cause solvent entrapment and premature coating failure.

Quik-Kick Epoxy Accelerator is acceptable for use. See data page 4.99 for details.

When coating over aluminum and galvanizing, recommended dft is 2-4 mils (50-100 microns).

Acceptable for Concrete Floors.

Can be used as a metalizing sealer. Consult Technical Bulletin - Sealers for Thermal Spray Metalizing, or your local Sherwin-Williams representative.

Refer to Product Information sheet for additional performance characteristics and properties.

SAFETY PRECAUTIONS

Refer to the MSDS sheet before use.

Published technical data and instructions are subject to change without notice. Contact your Sherwin-Williams representative for additional technical data and instructions.

DISCLAIMER

The information and recommendations set forth in this Product Data Sheet are based upon tests conducted by or on behalf of The Sherwin-Williams Company. Such information and recommendations set forth herein are subject to change and pertain to the product offered at the time of publication. Consult your Sherwin-Williams representative to obtain the most recent Product Data Information and Application Bulletin.

WARRANTY

The Sherwin-Williams Company warrants our products to be free of manufacturing defects in accord with applicable Sherwin-Williams quality control procedures. Liability for products proven defective, if any, is limited to replacement of the defective product or the refund of the purchase price paid for the defective product as determined by Sherwin-Williams. NO OTHER WARRANTY OR GUARANTEE OF ANY KIND IS MADE BY SHERWIN-WILLIAMS, EXPRESSED OR IMPLIED, STATUTORY, BY OPERATION OF LAW OR OTHERWISE, INCLUDING MERCHANTABILITY AND FITNESS FOR A PARTICULAR PURPOSE.

Electrical Cutsheets

Philips Day-Brite Static Recessed SP Troffer 2SPG214-FS-120

416-SR

Static Recessed

SP Troffer

2x2 2, 3, or 4 Lamp
T5, T5HO, or T8

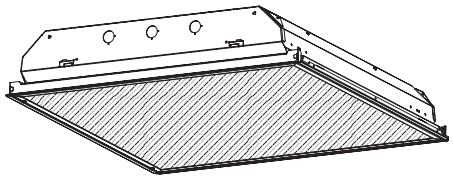

construction/finish

- Specification Quality recessed troffer for the following "NEMA" ceiling types: NEMA "G"-Grid, NEMA "NFSG"-Narrow Faced Slot Grid, NEMA "GR"-Grid Regressed, NEMA "NFG"-Narrow Faced Grid, NEMA "F"-Flange.
- Housing and door frame have smooth edges for easy handling.
- Housing is multi-stage phosphate treated for maximum corrosion resistance and finish coat is high reflectance baked white enamel.
- Troffer body constructed of die-formed CR steel.
- Factory installed access plate includes 7/8" hole, 7/8" knockout and grounding screw.
- T-bar grid clips built into fixture, no extra parts required. Designed for use with standard grid ceiling members, 1-1/2" maximum height.
- One-piece housing features integral end plates that increase rigidity and minimize damage from handling or shipping.
- Low profile body minimizes clearance required.
- All units have wire hanger tabs for independent wire suspension.

electrical

- cULus listed for damp locations.
- Self-contained fluorescent emergency power packs can be incorporated, listed for dry locations.
- No exposed internal wiring.

enclosure

- Mitered corner door frames are Flat Steel.
- Mechanically designed interlocks eliminate light leaks, no gaskets are needed.
- White (standard) or black (optional) door frames available.
- Door frames can be hinged and latched from either side.
- Spring loaded latches are standard.

Specifier's Reference

Project

Type

Model No.

Comments

Green Choice: 2SPG217-FS01-UNV-1/2-EBHE-LPT835HL

2 _____ _____ _____ _____ _____ – **FS** _____ _____ – _____ – _____

Width
2 – 2'

Ceiling Type
G – Grid
F – Flange

Lamp Type/Wattage
14 – 14WT5 (22")
17 – 17WT8 (24")
24HO – 24WT5HO (22")
31U1 – 31WT8 1-5/8" (24")
31U6 – 31WT8 6" (24")

Door Frame
FS – Flat Steel

Door Finish
BLANK – White
B – Black Door

Family
SP – SP Troffer
SPCP – Chicago Plenum Model

No. of Lamps
(not included)
2
3 (except 31U6)
4 (except 31U6 31U1)

Housing
R – Revised Housing

Lens
01 – Pattern 12 prismatic acrylic
12 – DB-12, .125" nominal
19 – DB-19, .156" nominal
21 – Pattern 12, .125" nominal
30 – 1/2"x1/2"x1/2" silver plastic louver
34 – 1-1/2"x1-1/2"x1" silver plastic louver
52 – 3/4"x3/4"x1/2" silver plastic louver

Voltage
120
277
347
UNV – Universal voltage, 120-277 volt

Options
1/2 – One 2-lamp ballast
1/3 – One 3-lamp ballast
1/21 – 2-lamp & 1-lamp ballasts
1/4 – One 4-lamp ballast
2/2 – Two 2-lamp ballasts
EB – Electronic ballast, <20% THD
EB10I – T8 electronic ballast, instant start, <10% THD
EB10R – Electronic ballast, program rapid start, <10% THD
EBHE – T8 electronic ballast, high efficiency, std. ballast factor
EBLHE – T8 electronic ballast, high efficiency, low ballast factor
EBHHE – T8 electronic ballast, high efficiency, high ballast factor
E1 – DEB-1 emerg. ballast, T8, 350-450 lumens, 120/277V
E1CAN – DEB-1 emerg. ballast, Canada market, T8, 350-450 lumens, 120/347V
E7 – DEB-7 emerg. ballast, T8, 600-700 lumens
E5 – DEB-5 emerg. ballast, US or Canada market, T8, 1100-1400 lumens, 120/277V
E5CAN – DEB-5 emerg. ballast, Canada market, T8, 1100-1400 lumens, 120/347V
E5ST – DEB-5ST emerg. ballast w/self test, T8, 1100-1400 lumens
E7LP – DEB-7LP emerg. ballast T8/T5/T5HO, 430-700 lumens
E6LP – DEB-6LP emerg. ballast, US or Canada market, T8/T5/T5HO, 750-1325 lumens, 120/277V
F1 – Installed flex, 3/8" diameter, 18 gauge, 3 wire, 6'
F2 – Installed flex, 3/8" diameter, 18 gauge, 4 wire, 6'
GLR# – Fusing, fast blow (# = number of ballasts)
LPT735 – Installed T8 lamps, 70+ CRI, 3500K
LPT835 – Installed lamps, 80+ CRI, 3500K
LPT835HL – Installed T8 hi lumen lamps, 80+ CRI, 3500K
1W – 1-way gasketing, between lens & door frame
2W – 2-way gasketing, 1W + gasketing between door frame & housing
3W – 3-way gasketing, 2W + gasketing for field installation between housing & ceiling

Accessories

FKDP22 – Flange conversion kit, 2x2.
FMA22 – 2'x2' "F" mounting frame for NEMA "F" mounting

PHILIPS Day-Brite PHILIPS CFI

dimensions

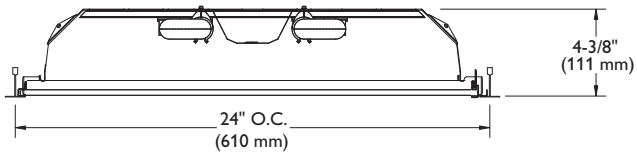

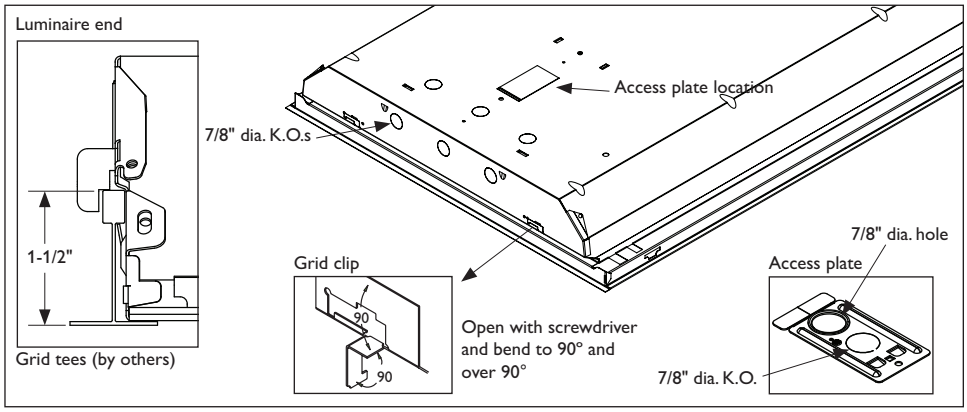

ceiling configuration

2 SP G 2 31U1 R

Ceiling type

G = Grid (NEMA G) **F** = Flange (NEMA F)

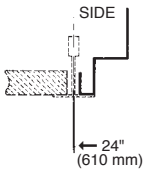

(NEMA Type G)
Lay-in acoustical ceilings using exposed grid suspension, with tees for luminaires on 24" x 24" spacing.

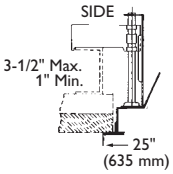

(NEMA Type F)
Flange for acoustical ceilings using concealed mechanical suspension. Swing-jack mounting brackets: adjustment 3-1/2" max. and 1" min. Refer to sheet 801-CL for output information.

photometry

SP 2x2 2 Lamp FB31U1 **Efficiency – 82.3%** **LER – 75** **TER – 66**

Catalog No.	2SPG231U1R-FS01-1/2-EB
Test No.	22804P
S/MH	1.3
Lamp Type	FB31U1
Lumens/Lamp	2800
Ballast Factor	.88
Input Watts	54

Comparative yearly lighting energy cost per 1000 lumens – **$3.20** based on 3000 hrs. and $.08 pwr KWH.

The photometric results were obtained in the Philips Day-Brite laboratory which is NVLAP accredited by the National Institute of Standards and Technology.

Candlepower

Angle	End	45	Cross
0	1851	1851	1851
5	1848	1839	1846
10	1819	1819	1834
15	1759	1772	1803
20	1699	1735	1784
25	1605	1667	1742
30	1491	1578	1682
35	1358	1463	1593
40	1201	1304	1451
45	1022	1124	1251
50	843	959	1031
55	668	770	827
60	512	561	614
65	383	371	437
70	294	235	314
75	237	170	223
80	177	139	164
85	92	79	87

Light Distribution

Degrees	Lumens	% Lamp	% Luminaire
0-30	1449	25.9	31.4
0-40	2363	42.2	51.3
0-60	3905	69.7	84.7
0-90	4609	82.3	100.0

Average Luminance

Angle	End	45°	Cross
45	4682	5149	5731
55	3773	4349	4671
65	2936	2844	3350
75	2966	2128	2791
85	3419	2936	3234

Coefficients of Utilization

EFFECTIVE FLOOR CAVITY REFLECTANCE 20 PER (pfc=0.20)

pcc	80			70			50	
pw	70	50	30	70	50	30	50	30
RCR								
0	97	97	97	95	95	95	91	91
1	90	85	82	88	84	81	81	79
2	82	76	70	81	75	69	71	68
3	76	68	60	73	66	60	64	58
4	69	59	54	68	58	53	56	52
5	64	54	46	63	53	46	52	46
6	59	48	41	57	47	41	46	40
7	55	45	38	54	44	36	42	36
8	52	40	34	50	40	34	39	33
9	47	38	30	46	36	30	35	29
10	45	34	28	44	34	28	34	28

dimensions

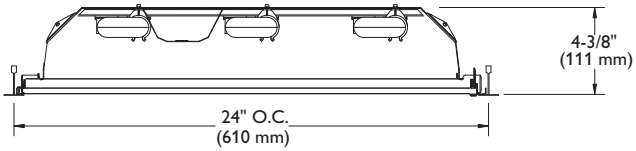

photometry

SP 2x2 3 Lamp FB31U1 **Efficiency – 75.5%** **LER – 72** **TER – 69**

Catalog No.	2SPG331U1R-FS01-1/3-EB
Test No.	22814P
S/MH	1.3
Lamp Type	FB31U1
Lumens/Lamp	2800
Ballast Factor	0.88
Input Watts	72

Comparative yearly lighting energy cost per 1000 lumens – **$3.33** based on 3000 hrs. and $.08 pwr KWH.

The photometric results were obtained in the Philips Day-Brite laboratory which is NVLAP accredited by the National Institute of Standards and Technology.

Candlepower

Angle	End	45	Cross
0	2657	2657	2657
5	2645	2645	2645
10	2604	2615	2625
15	2531	2561	2591
20	2430	2480	2532
25	2295	2374	2449
30	2131	2231	2322
35	1937	2044	2146
40	1705	1794	1900
45	1447	1535	1615
50	1189	1273	1310
55	941	999	1042
60	706	728	789
65	525	481	572
70	407	311	407
75	325	228	295
80	243	183	214
85	128	102	110

Light Distribution

Degrees	Lumens	% Lamp	% Luminaire
0-30	2067	24.6	32.6
0-40	3338	39.7	52.6
0-60	5403	64.3	85.2
0-90	6342	75.5	100.0

Average Luminance

Angle	End	45°	Cross
45	6629	7032	7398
55	5314	5642	5885
65	4024	3687	4384
75	4068	2854	3692
85	4757	3791	4088

Coefficients of Utilization

pcc	80			70			50	
pw	70	50	30	70	50	30	50	30
RCR								
0	90	90	90	88	88	88	83	83
1	82	79	76	81	78	75	75	71
2	76	69	65	73	68	64	66	63
3	69	61	56	68	60	56	58	54
4	64	56	50	63	55	48	53	47
5	58	50	44	57	48	42	47	42
6	55	46	39	54	45	39	42	38
7	51	40	34	50	40	34	40	34
8	47	38	32	46	36	32	36	30
9	45	34	28	44	34	28	34	28
10	41	32	27	40	32	26	30	26

dimensions

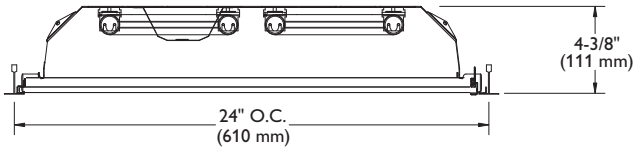

photometry

SP 2x2 2 Lamp FB032T8/6 **Efficiency – 76.5%** **LER – 69** **TER – 61**

Catalog No.	2SPG231U6R-FS01-1/2-EB
Test No.	22784P
S/MH	1.3
Lamp Type	FB032T8/6
Lumens/Lamp	2800
Ballast Factor	0.88
Input Watts	55

Comparative yearly lighting energy cost per 1000 lumens – **$3.48** based on 3000 hrs. and $.08 pwr KWH.

The photometric results were obtained in the Philips Day-Brite laboratory which is NVLAP accredited by the National Institute of Standards and Technology.

Candlepower

Angle	End	45	Cross
0	1752	1752	1752
5	1738	1747	1751
10	1710	1727	1739
15	1665	1695	1719
20	1598	1647	1687
25	1511	1578	1635
30	1403	1488	1558
35	1283	1371	1444
40	1143	1211	1295
45	972	1036	1105
50	799	867	914
55	641	694	741
60	484	510	570
65	362	338	404
70	278	217	286
75	221	156	205
80	166	127	149
85	84	70	78

Light Distribution

Degrees	Lumens	% Lamp	% Luminaire
0-30	1370	24.5	32.0
0-40	2222	39.7	51.8
0-60	3638	65.0	84.8
0-90	4287	76.5	100.0

Average Luminance

Angle	End	45°	Cross
45	4453	4746	5062
55	3620	3919	4185
65	2775	2591	3097
75	2766	1952	2566
85	3122	2602	2899

Coefficients of Utilization

EFFECTIVE FLOOR CAVITY REFLECTANCE 20 PER (pfc=0.20)

pcc	80			70			50	
pw	70	50	30	70	50	30	50	30
RCR								
0	91	91	91	89	89	89	84	84
1	83	81	77	81	79	76	76	72
2	77	70	66	75	69	65	67	63
3	70	63	56	68	61	56	59	55
4	65	56	50	63	55	48	53	47
5	59	51	44	57	50	44	47	42
6	56	46	39	54	45	39	44	38
7	52	41	34	50	40	34	40	34
8	47	38	32	46	38	32	36	30
9	45	34	28	44	34	28	34	28
10	41	33	27	40	32	27	30	26

Hg

Some luminaires use fluorescent or high intensity discharge (HID) lamps that contain small amounts of mercury. Such lamps are labeled, "Contain Mercury" and/or the symbol "HG". Lamps that contain mercury must be disposed of in accordance with local requirements. Information regarding lamp recycling and disposal can be found at www.lamprecycle.org

© 2014 Koninklijke Philips N.V. All rights reserved.
Specifications are subject to change without notice.
www.philips.com/luminaires

Philips Lighting
North America Corporation
200 Franklin Square Drive
Somerset, NJ 08873
Phone: 855-486-2216

Philips Lighting Company
281 Hillmount Road
Markham ON, Canada L6C 2S3
Phone: 800-668-9008

Philips Day-Brite Arioso Recessed
2AVG228-PMW-120

ARIOSO RECESSED
PERF 2X4

Natural soft lighting with classic styling

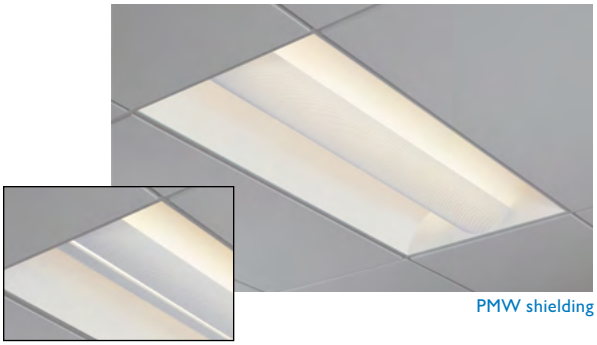

PMW shielding

SPMW shielding

Project:

Location:

Catalog No:

Fixture Type:

Mfg: Qty:

Notes:

PHILIPS DAY-BRITE / PHILIPS CFI ARIOSO RECESSED PERF 2X4

The Philips Day-Brite / Philips CFI Arioso Recessed Perf offers simple clean lines in combination with soft natural illumination. With micro-perforated baskets and contoured seamless reflectors, this series focuses on providing smooth comfortable lighting while subtly complementing the space. Flexible enough to integrate with any architectural design, Arioso Recessed provides a soft unassuming glow with comfortable illumination to optimize work and recreational activities.

Ordering guide

example: 2AVG232-PMW-UNV-1/2-EBLHE-LPT835HL

Width	Family	Ceiling Type	No. of Lamps (not included)	Lamp Type/ Wattage	Shielding	Voltage	Options
2	AV	G		—	—	—	
2 2'	**AV** Arioso Recessed Perf	**G** Grid	**2** (T5 and T8 only) **3** (T5 and T8 only) **4** (CF only)	**28** 28WT5 (46") **32** 32WT8 (48") **54HO** 54WT5HO (46") **CF40** 40WTT5 (24") **CF50** 50WTT5 (24") **CF55** 55WTT5 (24")	**PMW** Perforated metal w/ white overlay **SPMW** 2-piece perforated metal with white overlay	**120** **277** **347** **UNV** Universal voltage, 120-277 volt	

1/2	One 2-lamp ballast
1/3	One 3-lamp ballast
1/21	2-lamp & 1-lamp ballasts
2/2	Two 2-lamp ballasts
EB	Electronic ballast, <20% THD
EB10I	Electronic ballast, instant start, <10% THD
EB10R	Elec. ballast, program rapid start, <10% THD
EBL	T8 elec. ballast, low ballast factor
EBH	T8 elec. ballast, high ballast factor
EBHE	T8 elec. ballast, high eff., std. ballast factor
EBLHE	T8 elec. ballast, high eff., low ballast factor
EBHHE	T8 elec. ballast, high eff., high ballast factor
EBD	Electronic dimming ballast
EBSD	T8 elec. ballast, step dimming, std. (.88) ballast factor
ESNOLP	Electronic ballast for energy saving (25/28/30W) T8 lamps, use when lamps are not specified w/luminaire
E1	DEB-1 emerg. ballast, T8 or CF40, 350-450 lumens
E1CAN	DEB-1 emerg. ballast, Canada market, T8 or CF40, 350-450 lumens, 120/347V
E7	DEB-7 emerg. ballast, 390-700 lumens
E5	DEB-5 emerg. ballast, US or Canada market, T8 or CF, 1100-1400 lumens, 120/277V
E5CAN	DEB-5 emerg. ballast, Canada market, T8 or CF, 1100-1400 lumens, 120/347V
E5ST	DEB-5ST emerg. ballast with self test, 1100-1400 lumens
E7LP	DEB-7LP emerg. ballast, T8/T5/T5HO, 430-700 lumens
E6LP	DEB-6LP emerg. ballast, US or Canada market, T8/T5/T5HO, 750-1325 lumens, 120/277V
F1	Installed flex, 3/8" diameter, 18 gauge, 3 wire, 6'
F2	Installed flex, 3/8" diameter, 18 gauge, 4 wire, 6'
GLR#	Fusing, fast blow (# = number of ballasts)
LPT735	Installed lamps, 70+ CRI, 3500K
LPT835HL	Installed T8 or T5 hi lumen lamps, 80+ CRI, 3500K

Accessories (order separately)

- **AVHD –** Hold down clips
- **AV-DC4 –** Debris cover 2'x4'
- **AV-GC4 –** Germ cover 2'x4'
- **FMA24 –** 2'x4' "F" mounting frame for NEMA "F" mounting

PHILIPS Day-Brite PHILIPS CFI

ARIOSO RECESSED
PERF 2X4

Application

- Architectural recessed direct/indirect lighting for glare free illumination.
- Suitable for grid inverted T (NEMA "G") ceilings. Flange type ceilings (NEMA "F") require independently mounted flange kits (FMA).
- Fully recessed mounting, suitable for row mounting.

Construction/Finish

- Top reflector and end panels are formed together with no gaps.
- No visible welding, screws, latches, springs, hooks, rivets or plastic supports.
- Soft white baked enamel finish.
- Easy ballast access through lamp compartment.
- Optional hold down clips available (order separately: cat # AVHD).

Electrical

- Class P, HPF ballasts comply with Ⓔ Federal Ballast Law (Public Law 100-357,1988).
- cCSAus listed.
- Self-contained fluorescent emergency power pack can be incorporated.

Enclosure

- Choice of one-piece (PMW) or two-piece (SPMW) lamp shield configuration.
- Micro-perforated mesh lamp shield provides soft awareness of light source.
- Soft white overlay on inside of micro-perforated mesh conceals lamp image and balances between reflected and direct light.
- Swing down lamp shield for easy relamping.
- Lamp shield end trim is included with PMW models for field installation if desired (not required).

Dimensions

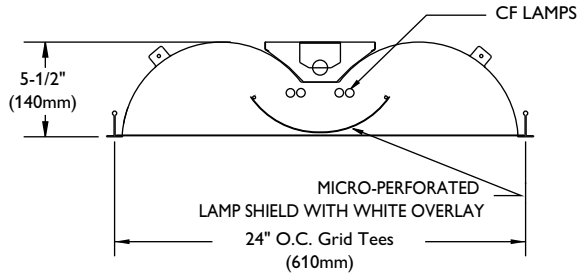

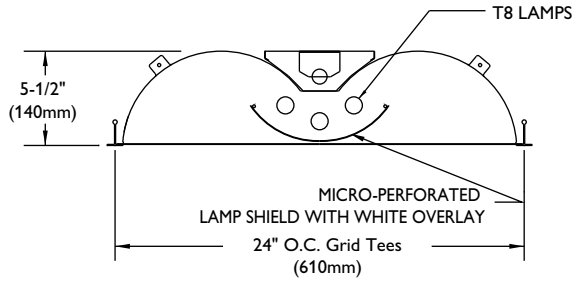

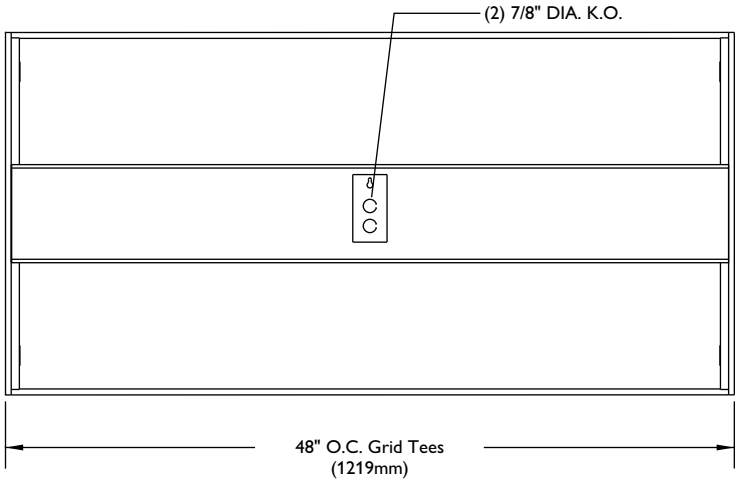

Photometry

Arioso Recessed Perf (PMW) 2x4 2 Lamp T8

Efficiency – 68.6% **LER – 57** **TER – 49**

Catalog No.	2AVG232-PMW-1/2-EB
Test No.	25911
S/MH	1.3
Lamp Type	F32T8
Lumens/Lamp	2850
Ballast Factor	.88
Input Watts	60

Comparative yearly lighting energy cost per 1000 lumens – **$4.21** based on 3000 hrs. and $.08 pwr KWH.

The photometric results were obtained in the Philips Day-Brite laboratory which is NVLAP accredited by the National Institute of Standards and Technology.

Candlepower

Angle	End	45	Cross
0	1290	1290	1290
5	1295	1286	1278
10	1277	1270	1266
15	1245	1244	1246
20	1201	1210	1220
25	1144	1165	1183
30	1082	1114	1149
35	1007	1053	1106
40	918	991	1055
45	823	922	996
50	718	846	925
55	614	763	841
60	508	671	734
65	406	564	590
70	309	438	407
75	216	276	268
80	130	140	152
85	57	51	53

Light Distribution

Degrees	Lumens	% Lamp	% Luminaire
0-30	1011	17.7	25.9
0-40	1671	29.3	42.7
0-60	3042	53.4	77.8
0-90	3912	68.6	100.0

Average Luminance

Angle	End	45°	Cross
45	1617	1811	1956
55	1487	1848	2036
65	1334	1854	1939
75	1159	1481	1438
85	908	813	845

Coefficients of Utilization

EFFECTIVE FLOOR CAVITY REFLECTANCE 20 PER (pfc=0.20)

pcc	80			70			50	
pw	70	50	30	70	50	30	50	30
RCR								
0	81	81	81	80	80	80	76	76
1	75	70	68	72	69	67	67	64
2	68	61	56	66	59	56	57	54
3	60	54	47	59	53	47	51	46
4	56	47	41	55	46	40	45	40
5	51	41	35	50	41	35	40	34
6	46	38	32	46	36	32	35	30
7	44	34	28	42	34	28	33	28
8	40	30	26	40	30	25	29	25
9	38	28	23	36	28	23	28	23
10	35	27	20	34	26	20	26	20

Hg

Some luminaires use fluorescent or high intensity discharge (HID) lamps that contain small amounts of mercury. Such lamps are labeled, "Contain Mercury" and/or the symbol "HG". Lamps that contain mercury must be disposed of in accordance with local requirements. Information regarding lamp recycling and disposal can be found at www.lamprecycle.org

Arioso Recessed Perf (PMW) 2x4 3 Lamp T8

Efficiency – 64.9% **LER – 56** **TER – 48**

Catalog No.	2AVG332-PMW-1/3-EB
Test No.	25512
S/MH	1.3
Lamp Type	F32T8
Lumens/Lamp	2850
Ballast Factor	.88
Input Watts	87

Comparative yearly lighting energy cost per 1000 lumens – **$4.29** based on 3000 hrs. and $.08 pwr KWH.

The photometric results were obtained in the Philips Day-Brite laboratory which is NVLAP accredited by the National Institute of Standards and Technology.

Candlepower

Angle	End	45	Cross
0	1836	1836	1836
5	1843	1831	1813
10	1816	1808	1795
15	1778	1776	1771
20	1713	1722	1725
25	1640	1660	1675
30	1551	1586	1619
35	1440	1496	1542
40	1321	1400	1462
45	1190	1299	1371
50	1044	1182	1272
55	891	1060	1154
60	736	927	1012
65	582	782	834
70	441	614	599
75	306	406	404
80	182	219	246
85	80	90	92

Light Distribution

Degrees	Lumens	% Lamp	% Luminaire
0-30	1438	16.8	25.9
0-40	2373	27.8	42.8
0-60	4297	50.3	77.5
0-90	5547	64.9	100.0

Average Luminance

Angle	End	45°	Cross
45	2337	2551	2692
55	2157	2566	2794
65	1912	2569	2740
75	1642	2178	2167
85	1275	1434	1466

Coefficients of Utilization

EFFECTIVE FLOOR CAVITY REFLECTANCE 20 PER (pfc=0.20)

pcc	80			70			50	
pw	70	50	30	70	50	30	50	30
RCR								
0	77	77	77	75	75	75	71	71
1	69	67	64	68	66	63	63	60
2	64	57	54	61	56	53	55	51
3	57	51	46	56	50	45	47	44
4	53	45	39	51	44	39	42	38
5	48	40	34	46	39	34	38	33
6	45	35	29	44	34	29	34	28
7	41	33	27	40	32	27	30	26
8	39	29	23	38	28	23	28	23
9	35	27	22	34	27	22	26	20
10	34	25	20	33	25	20	23	20

Arioso Recessed Perf (SPMW) 2x4 2 Lamp T8

Efficiency – 57.9% **LER – 49** **TER – 42**

Catalog No.	2AVG232-SPMW-1/2-EB
Test No.	26732
S/MH	1.4
Lamp Type	F32T8
Lumens/Lamp	2850
Ballast Factor	0.88
Input Watts	59

Comparative yearly lighting energy cost per 1000 lumens – **$4.90** based on 3000 hrs. and $.08 pwr KWH.

The photometric results were obtained in the Philips Day-Brite laboratory which is NVLAP accredited by the National Institute of Standards and Technology.

Candlepower

Angle	End	45	Cross
0	1030	1030	1030
5	1035	1027	1019
10	1022	1019	1016
15	998	1002	1003
20	967	979	990
25	925	950	975
30	875	913	946
35	820	875	910
40	759	824	878
45	687	768	878
50	612	712	823
55	536	681	742
60	454	611	623
65	375	511	482
70	290	380	311
75	207	226	193
80	128	111	111
85	56	52	45

Light Distribution

Degrees	Lumens	% Lamp	% Luminaire
0-30	819	14.4	24.8
0-40	1362	23.9	41.2
0-60	2547	44.7	77.1
0-90	3304	58.0	100.0

Average Luminance

Angle	End	45°	Cross
45	1307	1461	1671
55	1257	1597	1741
65	1194	1627	1535
75	1076	1175	1003
85	865	803	695

Coefficients of Utilization

EFFECTIVE FLOOR CAVITY REFLECTANCE 20 PER (pfc=0.20)

pcc	80			70			50	
pw	70	50	30	70	50	30	50	30
RCR								
0	68	68	68	67	67	67	64	64
1	63	59	56	60	58	56	56	54
2	56	52	47	55	51	46	48	46
3	52	45	40	50	44	40	42	39
4	46	40	34	46	39	34	38	33
5	42	35	29	41	34	29	34	28
6	40	32	27	39	30	26	29	26
7	36	28	23	35	28	23	27	23
8	34	26	20	33	26	20	25	20
9	32	23	19	30	23	19	23	19
10	29	22	17	28	22	17	20	17

Arioso Recessed Perf (SPMW) 2x4 3 Lamp T8

Efficiency – 52.0% **LER – 45** **TER – 39**

Catalog No.	2AVG332-SPMW-1/3-EB
Test No.	26748
S/MH	1.3
Lamp Type	F32T8
Lumens/Lamp	2850
Ballast Factor	0.88
Input Watts	87

Comparative yearly lighting energy cost per 1000 lumens – **$5.33** based on 3000 hrs. and $.08 pwr KWH.

The photometric results were obtained in the Philips Day-Brite laboratory which is NVLAP accredited by the National Institute of Standards and Technology.

Candlepower

Angle	End	45	Cross
0	1460	1460	1460
5	1462	1456	1445
10	1441	1439	1433
15	1408	1413	1414
20	1361	1375	1386
25	1301	1327	1351
30	1232	1272	1309
35	1151	1207	1254
40	1058	1136	1188
45	957	1056	1121
50	851	966	1034
55	736	870	930
60	623	760	800
65	506	636	628
70	397	486	402
75	280	290	252
80	171	144	149
85	74	63	57

Light Distribution

Degrees	Lumens	% Lamp	% Luminaire
0-30	1151	13.5	25.8
0-40	1904	22.3	42.8
0-60	3472	40.6	78.0
0-90	4452	52.1	100.0

Average Luminance

Angle	End	45°	Cross
45	1821	2009	2133
55	1727	2041	2182
65	1611	2025	1999
75	1456	1508	1310
85	1142	973	880

Coefficients of Utilization

EFFECTIVE FLOOR CAVITY REFLECTANCE 20 PER (pfc=0.20)

pcc	80			70			50	
pw	70	50	30	70	50	30	50	30
RCR								
0	61	61	61	60	60	60	57	57
1	56	54	52	55	53	51	51	48
2	51	46	42	50	46	42	44	40
3	46	40	36	45	40	35	39	34
4	42	35	32	40	35	30	34	29
5	39	32	27	38	32	27	30	27
6	35	28	23	34	28	23	28	23
7	33	26	22	32	26	20	25	20
8	30	23	19	29	23	19	23	19
9	28	22	17	28	22	17	20	17
10	27	20	16	26	20	16	19	16

© 2014 Koninklijke Philips N.V. All rights reserved.
Specifications are subject to change without notice.
www.philips.com/luminaires

Philips Lighting
North America Corporation
200 Franklin Square Drive
Somerset, NJ 08873
Phone: 855-486-2216

Philips Lighting Company
281 Hillmount Road
Markham ON, Canada L6C 2S3
Phone: 800-668-9008

Philips Day-Brite Static Recessed SP Troffer 2SPG228-FS01-120

417-SR

Static Recessed

SP Troffer

2x4 2, 3, or 4 Lamp
T5, T5HO, or T8

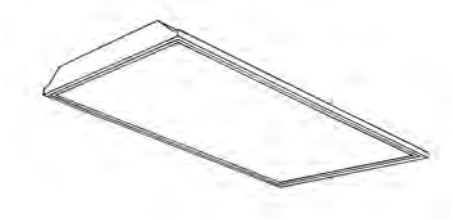

construction/finish

- Specification quality recessed troffer for the following "NEMA" ceiling types: NEMA "G"-Grid, NEMA "NFSG"-Narrow Faced Slot Grid, NEMA "GR"-Grid Regressed, NEMA "NFG"-Narrow Faced Grid, NEMA "F"-Flange.
- Housing and door frame have smooth edges for easy handling.
- Housing is multi-stage phosphate treated for maximum corrosion resistance and finish coat is high reflectance baked white enamel.
- One piece unitized body including end plates for added rigidity.
- Troffer body die-formed CR steel with reinforcing ribs for rigidity.
- 7/8" K.O.'s provided in each end cap and quick wire access plate in housing top with two 7/8" K.O.'s provided.
- Snap on wireway cover.
- T-bar grid clips built into luminaire end plates, no extra parts required.
- Low profile body minimizes clearance required.
- All units have wire hanger tabs for independent wire suspension.
- Twist lock lampholders standard.

electrical

- cULus listed for damp locations.
- Self-contained fluorescent emergency power packs can be incorporated, listed for dry locations.
- No exposed internal wiring.
- Twist lock lampholders are standard for positive lamp retention.

enclosure

- Mitered corner door frames are Flat Steel.
- Door frames can be hinged and latched from either side.
- White (standard) or black (optional) door frames available.
- Door frames utilize "T" hinges.
- White spring loaded latches are standard.

Specifier's Reference

Project	
Type	
Model No.	
Comments	

Green Choice: 2SPG232-FS01-UNV-1/2-EBLHE-LPT835HL

2 – **FS** – –

Family
- **SP** – SP Troffer
- **SPCP** – Chicago Plenum Model

No. of Lamps (not included)
- **2**
- **3**
- **4**

Door Frame
- **FS** – Flat Steel

Door Finish
- **BLANK** – White
- **B** – Black Door

Width
- **2** – 2'

Ceiling Type
- **G** – Grid
- **F** – Flange

Lamp Type/Wattage
- **28** – 28WT5 (46")
- **32** – 32WT8 (48")
- **54HO** – 54WT5HO (46")

Lens
- **01** – Pattern 12 prismatic acrylic
- **12** – DB-12, .125" nominal
- **19** – DB-19, .156" nominal
- **21** – Pattern 12, .125" nominal
- **30** – 1/2"x1/2"x1/2" silver plastic louver
- **34** – 1-1/2"x1-1/2"x1" silver plastic louver
- **52** – 3/4"x3/4"x1/2" silver plastic louver
- **93** – drop dish acrylic

Voltage
- **120**
- **277**
- **347**
- **UNV** – Universal voltage, 120-277 volt

Options
- **1/1** – One 1-lamp ballast
- **1/2** – One 2-lamp ballast
- **1/3** – One 3-lamp ballast
- **1/21** – 2-lamp & 1-lamp ballasts
- **1/4** – One 4-lamp ballast
- **2/2** – Two 2-lamp ballasts
- **EB** – Electronic ballast, <20% THD
- **EB10I** – T8 electronic ballast, instant start, <10% THD
- **EB10R** – Electronic ballast, program rapid start, <10% THD
- **EBHE** – T8 electronic ballast, high efficiency, std. ballast factor
- **EBLHE** – T8 electronic ballast, high efficiency, low ballast factor
- **EBHHE** – T8 electronic ballast, high efficiency, high ballast factor
- **EBSD** – T8 electronic ballast, step dimming, std. (.88) ballast factor
- **EBD** – Electronic dimming ballast
- **ESNOLP** – Electronic ballast for energy saving (25/28/30W T8 lamps, use when lamps are not specified with the luminaire)
- **E1** – DEB-1 emerg. ballast, T8, 350-450 lumens, 120/277V
- **E1CAN** – DEB-1 emerg. ballast, Canada market, T8, 350-450 lumens, 120/347V
- **E7** – DEB-7 emerg. ballast, T8, 600-700 lumens
- **E5** – DEB-5 emerg. ballast, T8, US or Canada market, 1100-1400 lumens, 120/277V
- **E5CAN** – DEB-5 emerg. ballast, Canada market, T8, 1100-1400 lumens, 120/347V
- **E5ST** – DEB-5ST emerg. ballast w/self test, T8, 1100-1400 lumens
- **E7LP** – DEB-7LP emerg. ballast T8/T5/T5HO, 430-700 lumens
- **E6LP** – DEB-6LP emerg. ballast, T8/T5/T5HO, 750-1325 lumens
- **F1** – Installed flex, 3/8" diameter, 18 gauge, 3 wire, 6'
- **F2** – Installed flex, 3/8" diameter, 18 gauge, 4 wire, 6'
- **GLR#** – Fusing, fast blow (# = number of ballasts)
- **LPT735** – Installed T8 lamps, 70+ CRI, 3500K
- **LPT835HL** – Installed T8/T5 hi lumen lamps, 80+ CRI, 3500K
- **1W** – 1-way gasketing, between lens & door frame
- **2W** – 2-way gasketing, 1W + gasketing between door frame & housing
- **3W** – 3-way gasketing, 2W + gasketing for field installation between housing & ceiling
- **SI** – Specular Insert (reflector)

Accessories

FKSP24 – Flange conversion kit 2'x4'
FMA24 – 2'x4' "F" mounting frame for NEMA "F" mounting

PHILIPS Day-Brite PHILIPS CFI

dimensions

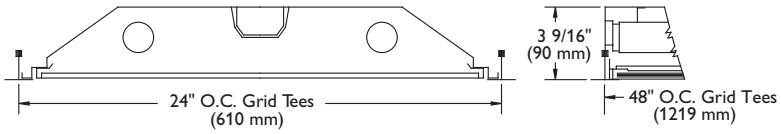

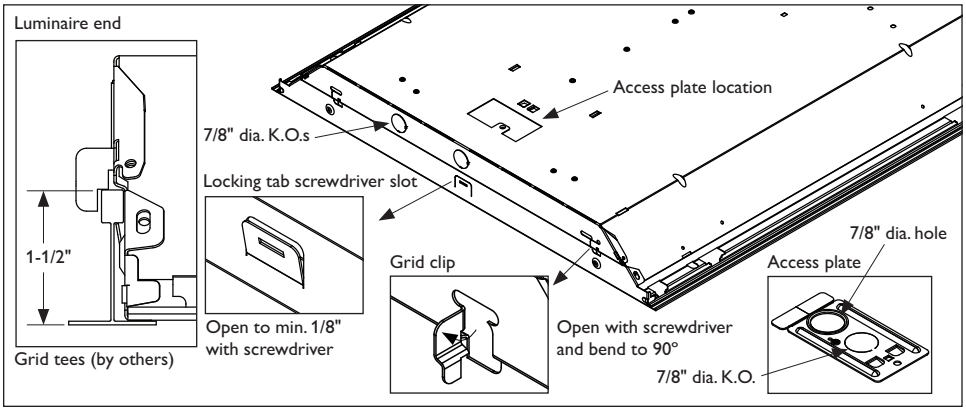

ceiling configuration

2 SP G 2 32

Ceiling type

G = Grid (NEMA G) **F** = Flange (NEMA F)

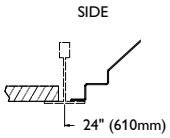

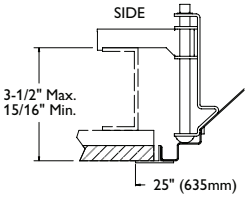

(NEMA Type G)
Lay-in acoustical ceilings using exposed grid suspension, with tees for luminaires on 24" x 48" spacing.

(NEMA Type F)
Flange for acoustical ceilings using concealed mechanical suspension. Swing-jack mounting brackets: adjustment 3-1/2" max. and 15/16" min.

photometry

SP 2x4 2 Lamp T8 **Efficiency – 83.8%** **LER – 73** **TER – 64**

Catalog No.	2SPG232-FS01-1/2-EB
Test No.	26375P
S/MH	1.4
Lamp Type	F32T8
Lumens/Lamp	2850
Ballast Factor	.87
Input Watts	57

Comparative yearly lighting energy cost per 1000 lumens – **$3.29** based on 3000 hrs. and $.08 pwr KWH.

The photometric results were obtained in the Philips Day-Brite laboratory which is NVLAP accredited by the National Institute of Standards and Technology.

Candlepower

Angle	End	45	Cross
0	1749	1749	1749
5	1756	1747	1735
10	1734	1734	1731
15	1695	1712	1722
20	1643	1678	1707
25	1580	1632	1684
30	1468	1569	1651
35	1359	1486	1599
40	1226	1376	1506
45	1076	1226	1352
50	905	1048	1142
55	713	841	902
60	541	627	681
65	397	434	491
70	298	294	343
75	230	204	232
80	173	152	155
85	96	91	88

Light Distribution

Degrees	Lumens	% Lamp	% Luminaire
0-30	1401	24.6	29.3
0-40	2326	40.8	48.7
0-60	3996	70.1	83.6
0-90	4778	83.8	100.0

Average Luminance

Angle	End	45°	Cross
45	2331	2656	2928
55	1904	2246	2409
65	1439	1573	1779
75	1361	1207	1373
85	1687	1599	1546

Coefficients of Utilization

EFFECTIVE FLOOR CAVITY REFLECTANCE 20 PER (pfc=0.20)

pcc	80			70			50	
pw	70	50	30	70	50	30	50	30
RCR								
0	100	100	100	96	96	96	93	93
1	92	88	83	89	85	82	81	80
2	83	77	71	81	76	70	72	68
3	77	68	61	75	67	60	64	58
4	69	60	54	68	59	53	57	52
5	65	54	46	63	53	46	52	46
6	59	48	41	57	47	40	46	40
7	56	45	36	54	44	36	42	35
8	52	40	34	51	40	33	39	33
9	47	36	30	46	36	29	35	29
10	45	34	28	44	34	28	33	27

dimensions

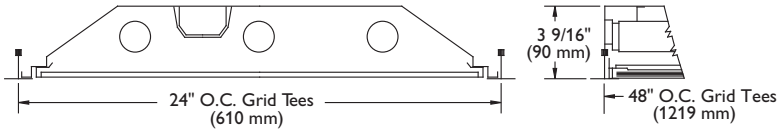

photometry

SP 2x2 3 Lamp F32T8 **Efficiency – 83.0%** **LER – 77** **TER – 67**

Catalog No.	2SPG332-FS01-1/3-EB
Test No.	29000
S/MH	1.3
Lamp Type	F32T8
Lumens/Lamp	2800
Ballast Factor	0.88
Input Watts	81

Comparative yearly lighting energy cost per 1000 lumens – **$3.12** based on 3000 hrs. and $.08 pwr KWH.

The photometric results were obtained in the Philips Day-Brite laboratory which is NVLAP accredited by the National Institute of Standards and Technology.

Candlepower

Angle	End	45	Cross
0	2774	2774	2774
5	2781	2762	2753
10	2748	2746	2742
15	2689	2699	2719
20	2605	2639	2671
25	2489	2555	2591
30	2340	2418	2474
35	2150	2239	2318
40	1925	2011	2109
45	1648	1742	1847
50	1358	1455	1548
55	1106	1173	1254
60	867	867	954
65	644	586	679
70	466	370	500
75	341	256	395
80	245	199	297
85	130	121	156

Light Distribution

Degrees	Lumens	% Lamp	% Luminaire
0-30	2198	25.7	31.0
0-40	3594	42.0	50.7
0-60	5980	69.9	84.3
0-90	7093	83.0	100.0

Average Luminance

Angle	End	45°	Cross
45	3421	3616	3834
55	2830	3002	3209
65	2237	2035	2358
75	1934	1452	2240
85	2189	2038	2627

Coefficients of Utilization

EFFECTIVE FLOOR CAVITY REFLECTANCE 20 PER (pfc=0.20)

pcc	80			70			50	
pw	70	50	30	70	50	30	50	30
RCR								
0	98	98	98	95	95	95	92	92
1	91	86	83	89	84	81	81	79
2	82	77	70	81	75	69	71	68
3	76	68	61	73	67	60	64	58
4	69	60	54	68	59	53	57	52
5	65	55	46	63	54	46	52	46
6	59	48	41	57	48	41	46	40
7	56	45	38	54	44	36	42	36
8	52	40	34	51	40	34	39	33
9	48	38	30	46	36	30	35	29
10	46	34	28	44	34	28	34	28

dimensions

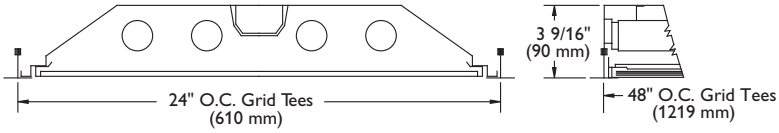

photometry

SP 2x2 3 Lamp F32T8 **Efficiency – 78.7%** **LER – 74** **TER – 65**

Catalog No.	2SPG432-FS01-1/4-EB
Test No.	26374
S/MH	1.3
Lamp Type	F32T8
Lumens/Lamp	2850
Ballast Factor	0.87
Input Watts	106

Comparative yearly lighting energy cost per 1000 lumens – **$3.20** based on 3000 hrs. and $.08 pwr KWH.

The photometric results were obtained in the Philips Day-Brite laboratory which is NVLAP accredited by the National Institute of Standards and Technology.

Candlepower

Angle	End	45	Cross
0	3385	3385	3385
5	3404	3377	3356
10	3359	3348	3345
15	3285	3301	3323
20	3179	3236	3281
25	3037	3130	3203
30	2858	2998	3110
35	2629	2814	2946
40	2369	2571	2719
45	2080	2288	2412
50	1741	1914	2017
55	1383	1538	1613
60	1043	1141	1217
65	758	803	875
70	564	539	615
75	438	374	420
80	330	279	282
85	186	166	162

Light Distribution

Degrees	Lumens	% Lamp	% Luminaire
0-30	2695	23.6	30.0
0-40	4443	39.0	49.5
0-60	7528	66.0	83.9
0-90	8975	78.7	100.0

Average Luminance

Angle	End	45°	Cross
45	4505	4956	5224
55	3693	4107	4307
65	2747	2910	3171
75	2592	2213	2485
85	3269	2917	2847

Coefficients of Utilization

EFFECTIVE FLOOR CAVITY REFLECTANCE 20 PER (pfc=0.20)

pcc	80			70			50	
pw	70	50	30	70	50	30	50	30
RCR								
0	93	93	93	92	92	92	86	86
1	85	82	79	83	81	78	77	75
2	79	72	68	77	70	66	68	64
3	71	64	57	69	63	56	60	56
4	66	56	51	65	56	50	54	48
5	60	51	45	59	51	44	48	42
6	56	46	40	55	46	39	44	39
7	53	41	34	51	41	34	40	34
8	48	39	32	47	38	32	36	30
9	46	34	28	45	34	28	34	28
10	42	33	27	41	32	26	30	26

Hg

Some luminaires use fluorescent or high intensity discharge (HID) lamps that contain small amounts of mercury. Such lamps are labeled, "Contain Mercury" and/or the symbol "HG". Lamps that contain mercury must be disposed of in accordance with local requirements. Information regarding lamp recycling and disposal can be found at www.lamprecycle.org

© 2014 Koninklijke Philips N.V. All rights reserved.
Specifications are subject to change without notice.
www.philips.com/luminaires

Philips Lighting
North America Corporation
200 Franklin Square Drive
Somerset, NJ 08873
Phone: 855-486-2216

Philips Lighting Company
281 Hillmount Road
Markham ON, Canada L6C 2S3
Phone: 800-668-9008

Philips Chloride VCLA Series Exit Sign VCLANGW

CE-15400

Commercial Exit Signs

VCLA Series

Value+ "Economy Grade" LED Thermoplastic Combo

codes and standards

- UL listed to Standard 924
- NFPA 70 (National Electric Code)
- NFPA 101 (Life Safety Code)
- UL listed for damp location.

construction

- Units are available in white.
- Low profile, snap-together quick mount design.
- Flame rated, UV stable thermoplastic housing.

installation

- Universal wall/ceiling/end mounting.
- Canopy not required for flat wall mount. (electronics contained inside housing).
- Pop-out chevron directional indicators are easily removed when required.
- Exit sign mounts to a standard 4" square outlet box. (canopy provided)

electronics

- Surge protection, low voltage disconnect, AC lockout installation, brown out protection, and constant current charger.
- 120/277 VAC selectable input.
- Power consumption: Low power consuption 2.8 Watts at normal operation, 3.5 Watts at emergency operation.

lamps

- Bright red or green energy efficient LED lamps provide uniform 6" letter illumination (3/4" stroke).
- Long life 4.8V, 2W (red) 1W (green), LED lamps require virtually no maintenance with its expected LED lamp life of 10 years.

battery

- Maintenance free 4.8V 1.0Ah nicad battery.
- Provides a minimum of 90 minutes of emergency illumination while in emergency mode.

remote capability

- One unit only has the capability to run one VLARHP, one VLA2RHP, or two VLA1RHP.
- Only remote heads listed below will work with this combo.

warranty

- Three year warranty on unit.

Specifier's Reference

Project

Type

Model No.

Comments

Green Product Choice:VCLANRW

Catalog Number	Letter Color	Housing Color	Lamp Type	Operation	Remote Capbility
VCLANRW	Red	White	LED	Emergency (nicad battery)	See footnote[1]
VCLANGW	Green	White	LED	Emergency (nicad battery)	See footnote[1]

Accessories

WG5 – Wire guard

Note:

All combos are universal (single face with an extra stencil face plate)
Canopy provided on all combos.

Footnote:

[1] The only lamp heads available for remote capability are the VLARP, VLA1RHP, and VLA2RHP. Each combo has the remote capability to run one VLARHP, one VLA2RHP, or two VLA1RHP.

VLA1RHP

LED Single Remote Lamp Head

VLA2RHP

LED Double Remote Lamp Head

VLARHP

LED Double Remote Lamp Head

© 2013 Koninklijke Philips Electronics N.V. All rights reserved.
Specifications are subject to change without notice.

PHILIPS CHLORIDE

dimensions

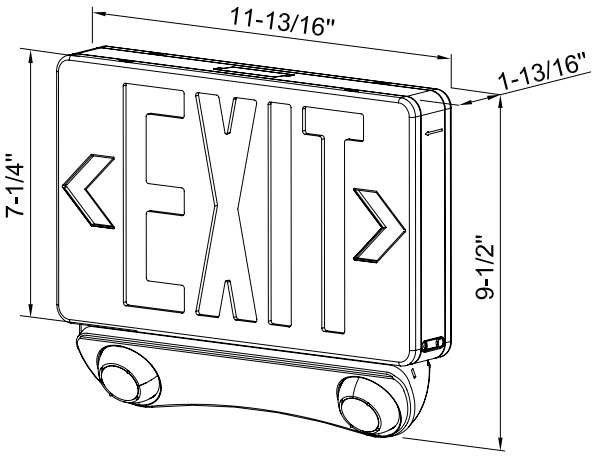

© 2013 Koninklijke Philips Electronics N.V. All rights reserved.
Specifications are subject to change without notice.

CE-15400 03/13

Philips Lighting Company
200 Franklin Square Drive
Somerset, NJ 08873
Phone: 855-486-2216
www.philips.com/luminaires

Philips Lighting Company
281 Hillmount Road
Markham ON, Canada L6C 2S3
Phone: 800-668-9008
www.philips.com/luminaires

Philips Gardco Floodlights Clearscape CSFS16L530NWG1SFSP120

PHILIPS

GARDCO

Floodlights

ClearScape

Small, CSFS

Project:

Location:

Cat.No:

Type:

Quantity:

Notes:

The Philips Gardco ClearScape LED luminaires feature an architecturally stylish design that will complement your application's visual landscape. ClearScape offers unparalled photometric performance, significant savings over HID, and is available with the latest in energy saving control options.

Ordering guide

Example: CSFS-16L-1A-NW-G1-SF-SP-UNIV-BK

Prefix	# of LEDs	Drive Current	LED Color	Generation	Mounting	Distribution	Voltage	Options		Finish
				G1						
CSFS ClearScape Flood Small	**16L** 16 LEDs **32L** 32 LEDs	**350** 350 mA **530** 530 mA **700** 700 mA **1A** 1 A **530** 530 mA **700** 700 mA **1A** 1 A	**NW** Neutral White *4,000K, 70 min. CRI* **CW** Cool White *5,700K, 70 min. CRI* **WW** Warm White *3,000K, 70 min CRI*	**G1** Gen-1	**SF** Slip Fitter Mount (fits to 2-3/8" O.D. tenon) **YK** Yoke Mount	**SP** Spot **RSP** Rectangular Spot **A33** Asymmetric 33° Flood **RN** Rectangular Narrow Flood **RM** Rectangular Medium Flood	**120** **208** **240** **277** **347** **480**[6] **UNV**[5] (120-277V) **HVU**[5,6] (347-480V)	**DD**[1] 0-10V Dimming Driver DynaDimmer Safety Profile **DS25**[2] **DS50**[2] **DS75**[2] DynaDimmer Median Profile **DM25**[2] **DM50**[2] **DM75**[2] DynaDimmer Economy Profile **DE25**[2] **DE50**[2] **DE75**[2] **MRO**[3,4,13] DynaDimmer and Motion Response Override *Pole Mounted sensor* **MR50**[4,13] Motion Response (50% Low) *Pole Mounted sensor*	**PCB**[5,6] Photocontrol Button **TLR**[9] Twist Lock Receptacle **TLRPC**[5,7,9] Twist Lock Receptacle w/ Photocell **F1**[5] Single Fusing (120, 277, 347V) **F2**[5] Double Fusing (208, 240, 480V) **F3**[5] Double Fusing Canadian Double Pull (208, 240, 480V) **ICL**[8] Internal Concentric Glare Louver	**BK** Textured Black **WH** Textured White **BZ** Textured Dark Bronze **DGY** Textured Dark Gray **MGY** Textured Medium Gray **OC** Optional Color Specify optional color or RAL ex: OC-LGP or OC-RAL7024. **SC** Special Color Specify. Must supply color chip. Requires factory quote.

1. 0-10V leads exiting the luminaire are supplied for secondary controls (by others).
2. DynaDimmer available with 120 through 277V only.
3. DynaDimmer Profile must be specified with 'MRO' option. Example: DE75-MRO
4. Requires 'MS-A-120' or 'MS-A-277' Accessory (ordered separately) . 120 or 277V only.
5. Specify input voltage. Fusing and Photocontrols are not available with 'UNV' or 'HVU' options.
6. 'PCB' option is not available in 480V.
7. Not available with 347 or 480V.
8. Not available with Spot Optics (SP)
9. Not available with Yoke Mount.

CSFS ClearScape LED Floodlight, Small

16 or 32 LED

Accessories - Ordering guide (Must be ordered separately)

Shielding and Lenses		Mounting - Slipfitter Mount		Mounting - Yoke Mount		Motion Response
ICL-CSFS(16/32)[10]	Internal Concentric Glare Louvers	**WMB-16.5-(F)**[12]	Wall Mounting Bracket	**MF4-(F)**[12]	Standalone Slip Fitter	**MS-A-120V**[5,13] 120V input - Motion Sensor for MR50 or MRO (pole mounted sensor only)
BD-CSFS[11]	Barn Doors (Black finish standard)	**SMT-2-(F)**[12]	Surface Mount Tenon	**BP-(F)**[12]	Surface Mount Base Plate	**MS-A-277V**[5,13] 277V input - Motion Sensor for MR50 or MRO (pole mounted sensor only)
WG-CSFS	Wire Guard	**JB-VMT-(F)**[12]	Junction Box w/ SMT-2	**JB-BP-(F)**[12]	Junction Box w/ Base Plate	
SG-CSFS	Stone Guard	**SM-18-(F)**[12]	18" Stanchion Mount			
RDF-CSFS[11]	Red Color Filter	**PTA-2180-16.5-(F)**[12]	Pole Top Adaptor 2@180			
PKF-CSFS[11]	Pink Color Filter	**PTA-2090-16.5-(F)**[12]	Pole Top Adaptor 2@90			
BLF-CSFS[11]	Blue Color Filter	**PTA-3090-16.5-(F)**[12]	Pole Top Adaptor 3@90			
GNF-CSFS[11]	Green Color Filter	**PTA-4090-16.5-(F)**[12]	Pole Top Adaptor 4@90			

10. (16/32) = Specify LED count Example: CSFS16. Not available with Spot Optics (SP).

11. Color filters and Barn Doors available Q2, 2015.

12. (F) = Specify Finish

13. Requires 'MR50' option or DynaDimmer 'MRO' option to be specified with the luminaire.

Dimensions - ClearScape Small (CSFS)

Slipfitter Mount

Front view

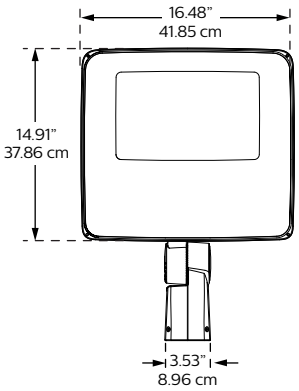

Side view

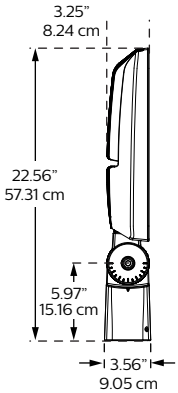

Weight: 31 Lbs

EPA: 2.20 ft^2

Yoke Mount

Front view

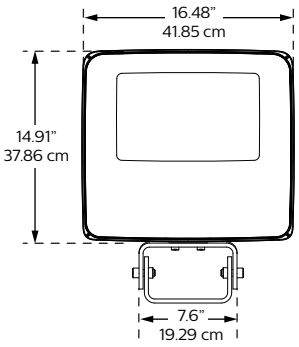

Side view

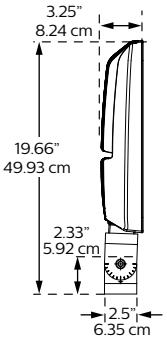

Weight: 29 Lbs

EPA: 2.12 ft^2

Slipfitter Aiming Diagram

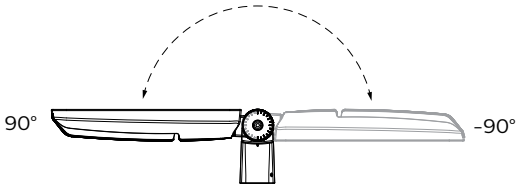

Drill Template - Yoke Mount

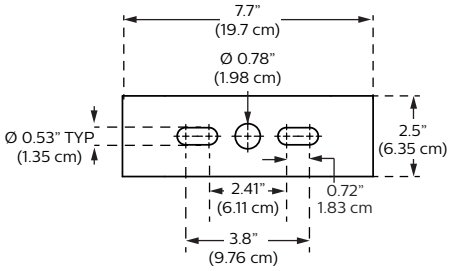

Recommended Bolt Size: 1/2"

CSFS ClearScape LED Floodlight, Small

16 or 32 LED

Distribution Patterns

Spot 'SP'

50% Main Beam: 15°H x 15°V
10% Field Beam: 24°H x 24°V
20' Setback, 0° Tilt

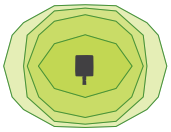

Rectangular Spot 'RSP'

50% Main Beam: 22°H x 13°V
10% Field Beam: 40°H x 30°V
20' Setback, 0° Tilt

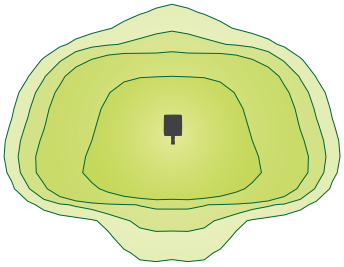

Asymmetric 33° Flood 'A33'

50% Main Beam: 81°H x 38°V
10% Field Beam: 119°H x 77°V
20' Setback, 0° Tilt

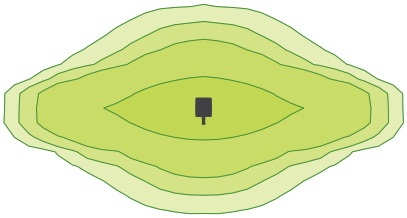

Rectangular Narrow 'RN'

50% Main Beam: 138°H x 41°V
10% Field Beam: 148°H x 75°V
20' Setback, 0° Tilt

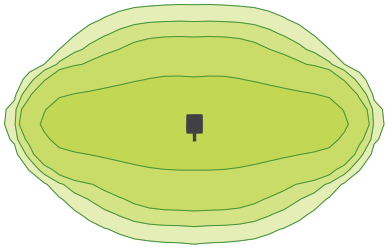

Rectangular Medium 'RM'

50% Main Beam: 81°H x 39°V
10% Field Beam: 119°H x 77°V
20' Setback, 0° Tilt

Technical Data

Order Code	# of LEDs	LED Current (mA)	Color Temperature (CCT)	Average System Wattage (W)	Initial Nominal Delivered Lumens					Average Efficacy (Lm/W)
					SP	RSP	A33	RN	RM	
CSFS-16L-350-NW	16	350	4000K, NW	20	2,087	2,057	2,174	2,127	2,099	109
CSFS-16L-530-NW	16	530	4000K, NW	29	3,025	2,982	3,135	3,085	3,044	106
CSFS-16L-700-NW	16	700	4000K, NW	38	3,859	3,805	3,984	3,935	3,884	103
CSFS-16L-1A-NW	16	1A	4000K, NW	57	5,424	5,347	5,533	5,531	5,459	95
CSFS-32L-530-NW	32	530	4000K, NW	52	5,737	5,656	5,944	5,850	5,775	111
CSFS-32L-700-NW	32	700	4000K, NW	72	7,510	7,403	7,724	7,658	7,560	106
CSFS-32L-1A-NW	32	1A	4000K, NW	109	10,431	10,283	10,727	10,636	10,499	97

Notes:

Due to rapid and continuous advances in LED technology, LED luminaire data is subject to change without notice and at the discretion of Philips.
Lumen output by optic type will vary slightly. See IES files and specification sheets when available. All technical data is subject to change.

CSFS ClearScape LED Floodlight, Small

16 or 32 LED

Luminaire Option and Accessory details

Barn Doors (**BD**)

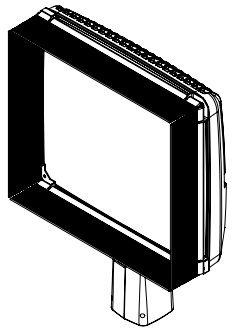

Stone Guard (**SG**)

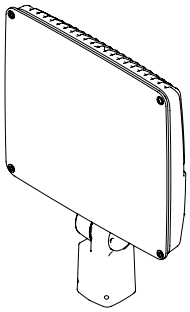

Wire Guard (**WG**)

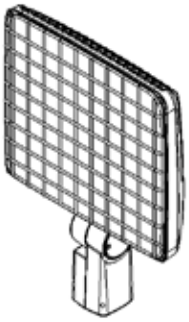

Control option details

MR50
Motion Response

Philips Gardco ClearScape LED luminaire with motion response, providing a 50% power reduction on low and a commensurate reduction in light output. The power and light output reduction is accomplished utilizing the Philips DynaDimmer module, programmed for a constant 50% power. Power supplied by the motion sensor connected to the override line on the DynaDimmer takes the luminaire to high setting, 100% power and light output, when motion is detected. The luminaire remains on high until no motion is detected for the motion sensor duration period, after which the luminaire returns to low. Duration period is factory set at 15 minutes, and is field adjustable from 5 minutes up to 15 minutes.
MR50 is available in 120V through 277V input only to the luminaire.
Motion sensors require single voltage 120V or 277V input.

The Area PIR motion sensor is the WattStopper EW-200-120-W (120V Input - MSA-120V) or the WattStopper EW-200-277-W (277V Input - MSA-277V.) One motion sensor per pole is required and is ordered separately. Area sensors require single voltage 120V or 277V input.

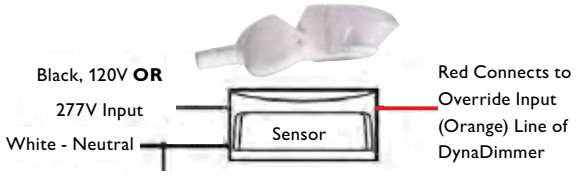

The area motion detector provides coverage equal to up to 6 times the sensor height above ground, 270° from the front-center of the sensor.

Area PIR Motion Sensor Coverage Pattern:

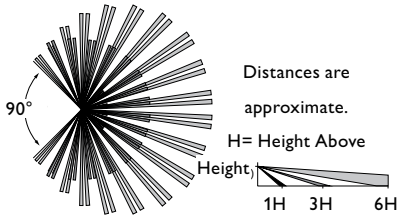

Motion response requires that the pole include an additional hand hole 15 feet above the pole base, normally oriented 180° to the standard hand hole. For Philips Gardco poles, order the pole with the Motion Sensor Mounting (MSM) option which includes the hand hole and a special hand hole cover plate for the sensor with a 1/2" NPT receptacle centered on the hand hole cover plate into which the motion sensor mounts. Once the motion sensor is connected to the hand hole cover plate, then wiring connections are completed in the pole. The plate (complete with motion sensor attached and wired) is then mounted to the hand hole. If poles are supplied by others, the customer is responsible for providing suitable mounting accommodations for the motion sensor in the pole.

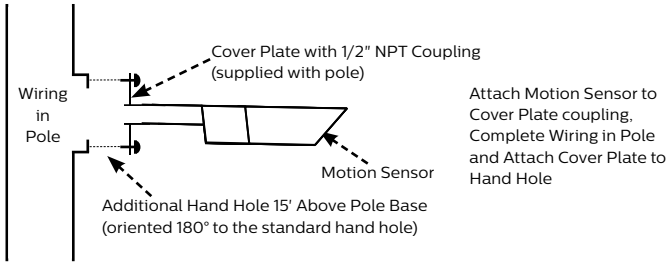

CSFS ClearScape LED Floodlight, Small

16 or 32 LED

Mounting accessory details - Slipfitter

WMB-16.5-(F)
Wall Mounting Bracket

2-3/8" O.D. vertical tenon welded to extruded aluminum arm with removable end cap for wiring. Arm is bolted to a cast aluminum plate that has four 5/8" diameter mounting holes.

Suitable for mounting single luminaire only.

Mounting hardware by others.

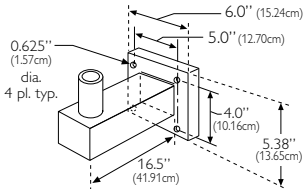

SMT-2-(F)
Surface Mounted Tenon

2-3/8" O.D. aluminum tenon welded to a flat aluminum plate with four 1/2" diameter mounting holes.

Single floodlight may be pad mounted or wall mounted.

Mounting hardware by others.

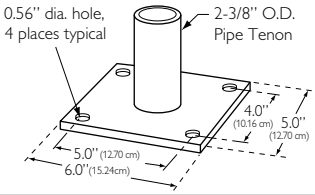

JB-VMT-(F)
Junction Box with SMT-2

For mounting to flat surfaces when using surface mount conduit.

Box has four 1/2" pipe entrances.

1/2" NPS.

Mounting hardware by others.

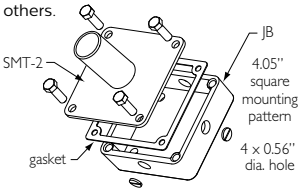

SM-18-(F)
18" Stanchion Mount

Stanchion mounting allows stable positioning of vertical tenon member in aggregate or substrate.

2-3/8" O.D. aluminum tenon welded to a 2-7/8" stanchion.

Standard length: 18"

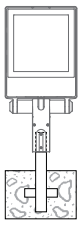

PTA-2180-16.5-(F)
Pole Top Adapter, 2@180

PTA-2090-16.5-(F)
Pole Top Adapter, 2@90

PTA-3090-16.5-(F)
Pole Top Adapter, 3@90

PTA-4090-16.5-(F)
Pole Top Adapter, 4@90

Vertically mounted 2-3/8" O.D. tenons welded to extruded aluminum arms with removable end cap for wiring. Arms bolted to cast aluminum pole top bracket. Fits poles having a 2-3/8" O.D. x 4" vertical tenon.

Components shipped separately. Field assembly required.

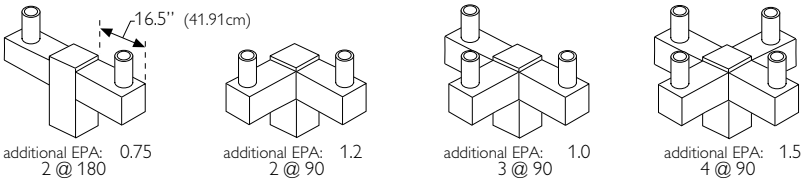

Mounting accessory details - Yoke Mount

MF4-(F) Slip Fitter

Fits 2-3/8" O.D. tenon

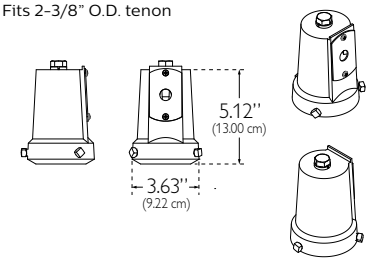

BP-(F) Surface Mount Base Plate

Flat aluminum plate with four 1/2" diameter mounting holes. Single floodlight may be pad mounted or wall mounted. Mounting hardware by others.

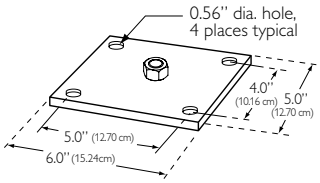

JB-BP-(F) Junction Box with BP

For mounting to flat surfaces when using surface mount conduit. Box has four 1/2" pipe entrances. Mounting hardware by others. 1/2" NPS.

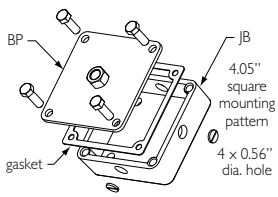

CSFS ClearScape LED Floodlight, Small

16 or 32 LED

Specifications

Construction

Die-cast aluminum housing with corrosion resistant hardware. ClearScape housing constructed to IP66. Die-cast aluminum heatsink allows for long life of LEDs up to 40°C ambient.

Thermal Management

The luminaire design incorporates vertical fins that allow the housing to provide excellent thermal management critical to long LED system life.

LED Board and Array

16 or 32 high power LEDs. Warm, Neutral, and Cool Color temperatures available. Metal core printed circuit board. RoHS compliant.

IP Rating

Luminaire optic and electrical housing constructed to IP66.

Driver

High efficiency multi-volt driver (50 or 60 Hz), maintains constant current flow to LEDs to accommodate LED variations. High power factor (0.9 standard). Constant current: 350, 530, 700, or 1000 mA. Voltage: 120-277, 347, 480. Ambient temperature range: -40°C (-40°F) to 40°C (104°F). Open / short circuit protection. RoHS compliant. Surge protector standard. The surge protector is in accordance with IEEE / ANSI C62.41.2 guidelines, with a surge current rating of 10 KV / 5 KA.

LED Optical System

SP - Spot, RSP - Rectangular Spot, A33 - Asymmetric 33° Flood , RN - Rectangular Narrow Flood, RM - Rectangular Medium Flood distributions. See optical data for details. Fully gasketed IP66-rated construction.

Optical Options

Internal Concentric Glare Louver (ICL) options reduce glare and increase visual comfort. Shields are mounted internally, and do not disrupt the overall aesthetic of the luminaire. Shields can be ordered as an option and installed in the factory, or as an accessory for field installation.

Barn doors are also available.

Mounting

Slipfitter (SF) is vertically adjustable, suitable for mounting to a 2-3/8" O.D. tenon. Slipfitter features an integral splice compartment with gasketed access cover to eliminate the need for a secondary junction box.

Yoke mount also available

Vibration Resistance

ClearScape with yoke mount and slipfitter carries a 3G vibration rating that conforms to the standards set forth by ANSI C136.31. Testing includes vibration to 3G acceleration in three axes, all performed on the same luminaire.

Energy saving benefits and controls

The CSFS has a system efficacy of up to 118 LPW at a system wattage of up to 109W. Optional DynaDimmer and motion response controls provide additional energy savings by dimming to 25%.

Finish

Standard textured finishes available.
BZ - Textured Dark Bronze, DGY - Textured Dark Gray, MGY - Textured Medium Gray, WH - Textured White, BK - Textured Black.

Accessories

See ordering guide on page 2, 4 and 5 for details.

Listings

All luminaires bear UL or cUL (where applicable) Wet Location labels. Suitable for use in ambients from -40° to 40°C (-40° to 104°F).

Limited Warranty

5 year limited warranty. See philips.com/luminaires for complete details and exclusions.

LED Performance:

PREDICTED LUMEN DEPRECIATION DATA[13]				
Ambient Temperature °C	Driver mA	Calculated L_{70} Hours[13,14]	L_{70} Per TM-21[14,15]	Lumen Maintenance % @ 60,000 hours
25°C	up to 1050 mA	>100,000	>60,000	96%

13. Predicted performance derived from LED manufacturer's data and engineering design estimates, based on IESNA LM-80 methodology. Actual experience may vary due to field application conditions.
14. L_{70} is the predicted time when LED performance depreciates to 70% of initial lumen output.
15. Calculated per IESNA TM21-11. Published L_{70} hours limited to 6 times actual LED test hours.

© 2014 Koninklijke Philips N.V. All rights reserved.
Philips reserves the right to make changes in specifications and/or to discontinue any product at any time without notice or obligation and will not be liable for any consequences resulting from the use of this publication.
philips.com/luminaires

Philips Lighting, North America Corporation
200 Franklin Square Drive, Somerset, NJ 08873
Tel. 855-486-2216

Imported by: Philips Lighting,
A division of Philips Electronics Ltd.
281 Hillmount Rd, Markham, ON, Canada L6C 2S3
Tel. 800-668-9008

Philips Gardco Site & Area EcoForm
ECF-2-5-75-LA-4853-CW-UNV-PCB

PHILIPS

GARDCO

Site & Area

EcoForm

Project:

Location:

Cat.No:

Type:

Qty:

Notes:

EcoForm combines economy with performance in an LED area luminaire. Capable of delivering up to 20,000 lumens or more in a compact, low profile housing, EcoForm offers a new level of customer value. EcoForm features an innovative retrofit arm kit, simplifying site conversions to LED by eliminating the need to drill additional holes in most existing poles. Integral control systems, including motion response and wireless controls are available for further energy savings during off peak hours.

Ordering guide

example: ECF-APD-MRO-1-4-75LA-NW-120-NP-LF

Prefix	Controls	Mounting	Optics	LED Wattage	Color Temp	Voltage	Finish	Options
ECF –	–	–	–	–	–	–	–	
ECF EcoForm	**—** Standard luminaire (leave blank) **DIM** 0-10V Dimming **APD**[1] Auto Profile Dimming **APD-MRO**[2] Auto Profile Dimming and Motion Response Override pole mounted motion sensor **APD-MRI**[2,3] APD with Motion Response Override luminaire sensor **MRI**[2,3] Motion Response at 50% low luminaire sensor **MR50**[2] Motion Response at 50% low, pole mounted sensor **LimeLight Wireless Controls** **LLC2**[1,5] #2 lens for 8-15' mounted heights **LLC3**[1,5] #3 lens for 15-25' mounted heights **LLC4**[1,5] #4 lens for 25-40' mounted heights	**1** Standard **2** 2@180 **2@90** 2@90 **3** 3@90 **3@120** 3@120 **4** 4@90 **WS** Wall mount including surface conduit rear entry permitted **MA** Mast Arm Fitter (requires 2-3/8" O.D. Mast Arm)	**2** Type 2 **3** Type 3 **4** Type 4 **5** Type 5	**530 mA** **55LA-3253**[1] **75LA-4853** **100LA-6453** **700mA** **70LA-3270** **105LA-4870** **135LA-6470** **1050mA** **105LA-321A**[1] **160LA-481A** **215LA-641A**	**CW** Cool White 5,700 K 70 CRI (nominal) **NW** Neutral White 4,000 K 70 CRI (nominal) **WW**[4] Warm White 3,000 K 70 CRI (nominal)	**120** 120V **208** 208V **240** 240V **277** 277V **347** 347V **480** 480V **UNV** 120-277V 50hz/60hz **HVU** 347-480V 50hz/60hz	**BRP** Bronze Paint **BLP** Black Paint **WP** White Paint **NP** Natural Paint **OC** Optional Color Specify optional color or RAL (ex: OC-LGP or OC-RAL7024) **SC** Special color Specify, must supply color chip. Requires factory quote.	**TL** Tool-Less entry and driver removal hardware **TB**[3] Terminal Block **IS**[6] Internal Shield **LF**[7] Line Fusing **LFC**[7] Line Fusing for Canada **PC**[5,7,8] Receptacle with Photocell (Includes PCR5) **PCB**[5,7,8] Photocell Button **PCR5**[5,11,13] Photocell Receptacle only with 2 dimming connections **PCR7**[5,12,13] Photocell Receptacle only with 2 dimming and 2 auxiliary connections **RAM** Retrofit Arm Mount kit **PTF2**[9] Pole Top Fitter for 2 3/8"-3" Tenon **PTF3**[9] Pole Top Fitter for 3"-3 1/2" Tenon **PTF4**[9] Pole Top Fitter for 3 1/2"-4" Tenon **RPA**[10] Round Pole Adapter for 3"-3.9" O.D. **BD** Bird Deterrent (field installed only)

1. Available in 120V–277V Voltages only (UNV, 120, 208, 240 & 277).
2. MR50 and APD-MRO luminaires require one motion sensor per pole, ordered separately. See page 2 for Accessories. Available in 120V or 277V only.
3. ECF-MRI requires outboarded sensor when used with Terminal Block (TB) Option.
4. Contact factory for lead times on warm white.
5. LLC2/LLC3/LLC4 Wireless Controls are not configurable with PC/PCB/PCR5/PCR7 Options. See page 7-8 for more info.
6. Not configurable with Type 5 (5) Optics.
7. Not configurable with 120-277V (UNV) Voltage. Voltage must be specified.
8. Not configurable with 480V (480) Voltage.
9. Not configurable with 3@120 (3@120) Mounting.
10. No adaptor required for 4" round poles. RPAs provided with Black Paint standard.
11. Works with 3-pin or 5-pin NEMA photocell/dimming device.
12. Works with 3-pin or 5-pin NEMA photocell/dimming device and auxiliary connections are not connected (for future use only).
13. If ordered with DIM, APD, MRI, MR50, APD-MRI, APD-MRO, dimming will not be connected to NEMA receptacle.

ECF EcoForm

Site & Area

EcoForm Accessories (order separately)

FS1R-100

MR hand held programmer

For use with 'MRI' motion response when field programming is required. If desired, only one is needed per job.

MS-A-120V

120V Input Area Motion Sensor

For MR50 (Motion Response) or APD-MRO (Automatic Profile Dimming with Motion Response Override)

MS-A-277V

277V Input Area Motion Sensor

For MR50 (Motion Response) or APD-MRO (Automatic Profile Dimming with Motion Response Override)

Note: Motion Sensors are ordered separately, with one (1) motion sensor required per pole location for MR50 or APD-MRO luminaires. See Luminaire Configuration Information on page 5 for more details. Area motion sensor color is Arctic White. MRI and APD-MRI luminaires include an integral motion sensor.

EcoForm Drill Template (standard arm mount)

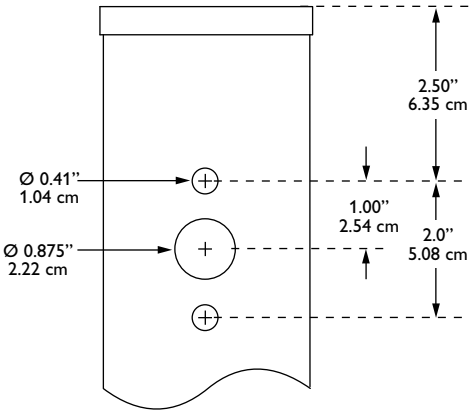

LED Wattage and Lumen Values (standard EcoForm luminaire)

Order Code (standard units)	Array Quantity	Total LEDs	LED Current (mA)	Average System Watts[1]	LED Selection	Initial Lumens[2]			
						2 Type 2	3 Type 3	4 Type 4	5 Type 5
55LA-3253	2	32	530	52	NW	5,994 (s)	5,895 (s)	5,823 (s)	5,588 (s)
75LA-4853	3	48	530	77	NW	8,899 (s)	8,753 (s)	8,646 (s)	8,297 (s)
100LA-6453	4	64	530	103	NW	11,896 (s)	11,700	11,558	11,091
70LA-3270	2	32	700	69	NW	7,385 (s)	7,576 (s)	7,293 (s)	7,068 (s)
105LA-4870	3	48	700	104	NW	10,965 (s)	11,249 (s)	10,828 (s)	10,494 (s)
135LA-6470	4	64	700	139	NW	14,657 (s)	15,037	14,475 (s)	14,028
105LA-321A	2	32	1050	107	NW	10,199 (s)	10,458	10,072 (s)	9,767
160LA-481A	3	48	1050	158	NW	15,144 (s)	15,565	14,955 (s)	14,465
215LA-641A	4	64	1050	211	NW	20,243	20,252	19,991	19,880

1. System input wattage may vary based on input voltage, by up to +/- 10% , and based on manufacturer forward voltage, by up to +/- 8%.
2. Lumen values based on photometric tests performed in compliance with IESNA LM-79.

(s). Data is scaled based on tests of similar, but not identical, luminaires.

Dimensions – Standard EcoForm luminaire

Top View

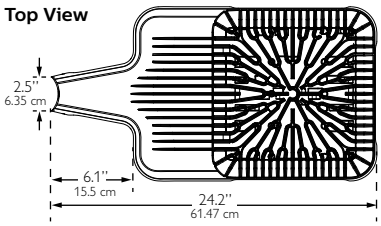

Side View

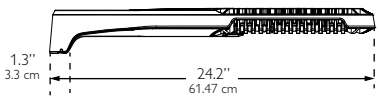

EPA (ft²/m²)

Single	Twin (2@180)	3/4@90
0.2 / 0.019	0.5 / 0.046	0.5 / 0.046

End View

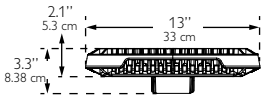

Approximate Luminaire Weight: 20 Lbs (9.07 Kg)

ECF EcoForm

Site & Area

Dimensions – EcoForm with Retrofit Arm Mount (RAM)

Top View

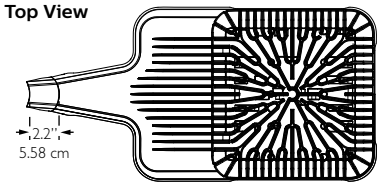

Side View

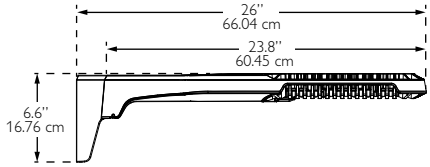

End View

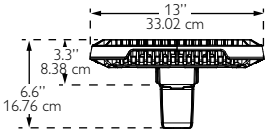

EPA (ft²/m²)

Single	Twin (2@180)	3/4@90
0.3 / 0.028	0.6 / 0.056	0.7 / 0.065

Approximate Luminaire Weight:
21 Lbs (9.53 Kg)

Dimensions – EcoForm with Mast Arm Fitter (MA)

Top View

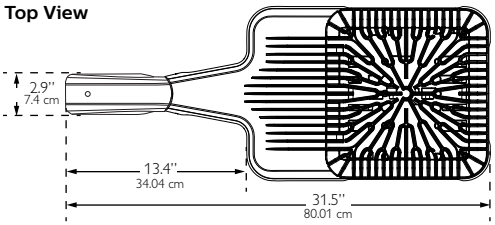

Side View

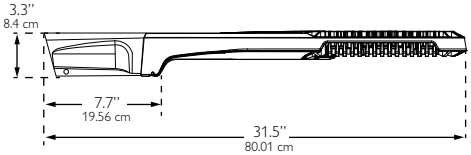

End View

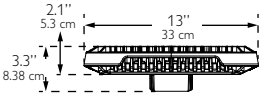

EPA (ft²/m²)

Single
0.51 / 0.047

Approximate Luminaire Weight:
21.5 Lbs (9.77 Kg)

Dimensions – EcoForm with Wall Mount (WS)

Top View

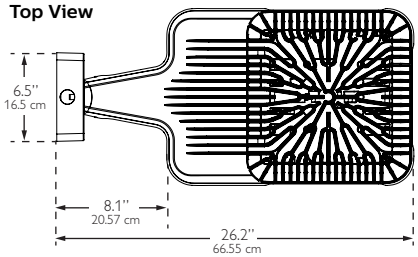

Side View

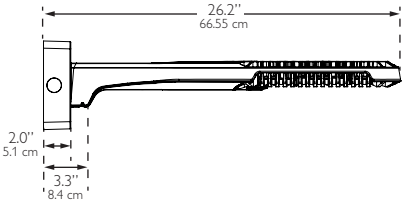

End View

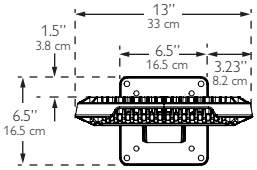

Approximate Luminaire Weight:
23.36 Lbs (10.6 Kg)

Dimensions – EcoForm with LimeLight Luminaire mounted controller

Top View

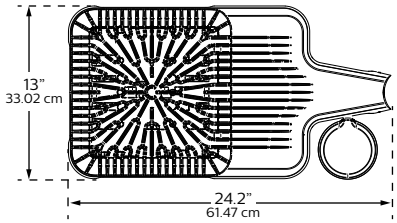

Side View

End View

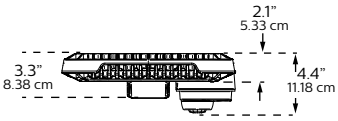

ECF EcoForm

Site & Area

Luminaire Configuration Information

ECF

Philips Gardco EcoForm LED standard luminaire providing constant wattage and constant light output when power to the luminaire is energized.

ECF-DIM

Philips Gardco EcoForm LED luminaire provided with 0-10V dimming for connection to a control system provided by others.

ECF-APD

Philips Gardco EcoForm LED luminaire with Automatic Profile Dimming. Luminaire is provided with a Philips DynaDimmer module, programmed to go to 50% power, 50% light output two (2) hours prior to night time mid-point and remain at 50% for six (6) hours after night time mid-point. Mid-point is continuously recalculated by the Philips DynaDimmer module based on the average mid-point of the last two full night cycles. Short duration cycles, and power interruptions are ignored and do not affect the determination of mid-point.

ECF-APD is available in 120V–277V input only.

ECF-APD Dimming Profile:

100%	2 hours	6 hours	100%
	50%	50%	

Power On **Mid Point** **Power Off**

ECF-MR50

Philips Gardco EcoForm LED luminaire with motion response, providing a 50% power reduction on low and a commensurate reduction in light output. The power and light output reduction is accomplished utilizing the Philips DynaDimmer module, programmed for a constant 50% power. Power supplied by the motion sensor connected to the override line on the DynaDimmer takes the luminaire to high setting, 100% power and light output, when motion is detected. The luminaire remains on high until no motion is detected for the motion sensor duration period, after which the luminaire returns to low. Duration period is factory set at 15 minutes, and is field adjustable from 5 minutes up to 15 minutes.

ECF-MR50 is available in 120V–277V input only to the luminaire. Motion sensors require single voltage 120V or 277V input.

The Area PIR motion sensor is the WattStopper EW-200-120-W (120V Input - MSA-120V) or the WattStopper EW-200-277-W (277V Input - MSA-277V.) One motion sensor per pole is required and is ordered separately. Area sensors require single voltage 120V or 277V input.

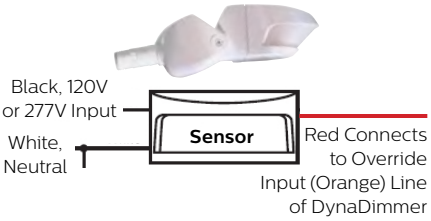

The area motion detector provides coverage equal to up to 6 times the sensor height above ground, 270° from the front-center of the sensor.

Area PIR Motion Sensor Coverage Pattern:

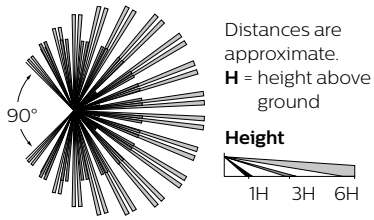

Motion response requires that the pole include an additional hand hole 15 feet above the pole base, normally oriented 180° to the standard hand hole. For Philips Gardco poles, order the pole with the Motion Sensor Mounting (MSM) option which includes the hand hole and a special hand hole cover plate for the sensor with a 1/2" NPT receptacle centered on the hand hole cover plate into which the motion sensor mounts. Once the motion sensor is connected to the hand hole cover plate, then wiring connections are completed in the pole. The plate (complete with motion sensor attached and wired) is then mounted to the hand hole. If poles are supplied by others, the customer is responsible for providing suitable mounting accommodations for the motion sensor in the pole.

Mounting to a Philips Gardco Pole:

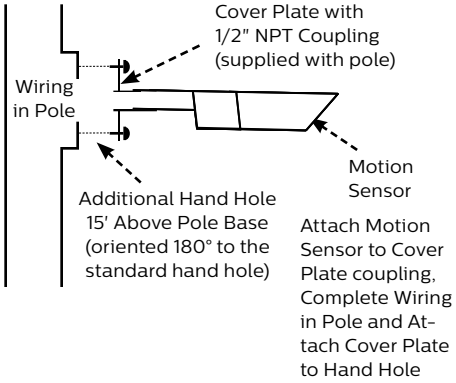

ECF-APD-MRO

Philips Gardco EcoForm LED luminaire with Automatic Profile Dimming, with Motion Response Override. The ECF-APD-MRO combines the benefits of both automatic profile dimming and motion response, using the Philips DynaDimmer module. The luminaire will dim to 50% power, 50% light output, per the dimming profile shown for the ECF-APD. If motion is detected during the time that the luminaire is operating at 50%, the luminaire returns to 100% power and light output. The luminaire remains on high until no motion is detected for the duration period, after which the luminaire returns to low. Duration period is factory set at 15 minutes, and is field adjustable from 5 minutes up to 15 minutes.

Notes:

ECF-APD-MRO is available in 120V through 277V input only to luminaire. The motion sensor requires either 120V or 277V input to the motion sensor.

The ECF-APD-MRO has the same pole requirements and utilizes the same motion sensors as the ECF-MR50. The motion sensor mounts and wires identically as well. The ECF-APD-MRO utilizes the identical dimming profile as shown for the ECF-APD.

By combining the benefits of automatic profile dimming and motion response, the ECF-APD-MRO assures maximum energy savings, and insures that adequate light is present if motion is detected.

All motion sensors utilized consume 0.0 watts in the off state.

Luminaire Configuration Information (Continued)

ECF-MRI

Luminaires with Motion Response include a LED driver and an integral programmable motion sensor. The motion sensor is set to a constant 50%. When motion is detected, the luminaire goes to 100%. The luminaire remains on high until no motion is detected for the motion sensor duration period, after which the luminaire returns to low. Duration period is factory set at 5 minutes. Available with 120V or 277V only.

Luminaires include a passive infrared (PIR) motion sensor, WattStopper® FSP-211 equipped with an FSP-L3 lens, capable of detecting motion within 20 feet of the sensor, 180° around the luminaire, when placed at a 20 foot mounting height, or mounted on a wall. Available in 120V or 277V input only. Motion sensor off state power is 0.0 watts.

The approximate motion sensor coverage pattern is as shown below.

Side Coverage Pattern

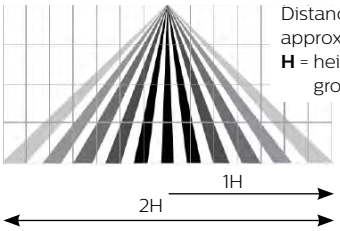

Distances are approximate.
H = height above ground

Top Coverage Pattern

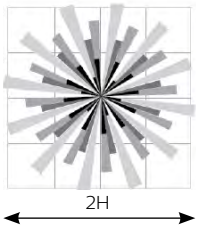

ECF-APD-MRI

Luminaires with Automatic Profile Dimming and Motion Response Override combine the benefits of both automatic profile dimming and motion response. APD-MRI luminaires utilize Philips DynaDimmer. The luminaire will dim to 50% power, 50% light output, per the dimming profile shown for APD luminaires (see page 4). If motion is detected during the time that the luminaire is operating at 50%, the luminaire goes to 100% power and light output. The luminaire remains on high until no motion is detected for the duration period, after which the luminaire returns to low. Duration period is factory set at 5 minutes.

APD-MRI luminaires are available with 120V or 277V input voltages only.

APD-MRI luminaires use the identical motion sensor as MRI luminaires. See motion sensor details for ECF-MRI.

FS1R-100 Wireless Remote Programming Tool

The FS1R-100 Remote Programming Tool accessory permits adjustment of ECF-MRI and ECF-APD-MRI sensor settings, including duration and dimming level on low, without the need to connect any wires to the luminaire.

The FS1R-100 Wireless IR Programming Tool is a handheld tool for setup and testing of WattStopper FSP-211. It provides wireless access to the FSP-211 sensors for setup and parameter changes.

The FS1R-100 display shows menus and prompts to lead you through each process. The navigation pad provides a familiar way to navigate through the customization fields.

Within a certain mounting height of the sensor, the FS1R-100 allows modification of the system without requiring ladders or tools simply with a touch of a few buttons.

The FS1R-100 IR transceiver allows bi-directional communication between the FSP-211 and the FS1R-100 programming tool . Simple menu screens let you see the current status of the system and make changes. It can change FSP-211 sensor parameters such as high/low mode, sensitivity, time delay, cut off and more. With the FS1R-100 you can also establish and store FSP-211 parameter profiles.

The FS1R-100 operates on three standard 1.5V AAA Alkaline batteries or three rechargeable AAA NiMH batteries. The battery status displays in the upper right corner of the display. Three bars next to BAT= indicates a full battery charge. A warning appears on the display when the battery level falls below a minimum acceptable level. To conserve battery power, the FS1R-100 automatically shuts off 10 minutes after the last key press.

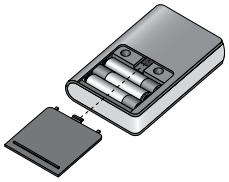

You navigate from one field to another using (up) or (down) arrow keys. The active field is indicated by flashing (alternates between yellow text on black background and black text on yellow background.)

Once active, use the Select button to move to a menu or function within the active field. Value fields are used to adjust parameter settings. They are shown in "less-than/greater-than" symbols: <value>. Once active, change them using (left) and (right) arrow keys. In general the up key increments and the down key decrements a value. Selections wrap-around if you continue to press the key beyond maximum or minimum values. Moving away from the value field overwrites the original value. The Home button takes you to the main menu. The Back button can be thought of as an undo function. It takes you back one screen. Changes that were in process prior to pressing the key are lost.More information on the FS1R-100 Remote Programming Tool is available at wattstopper.com.

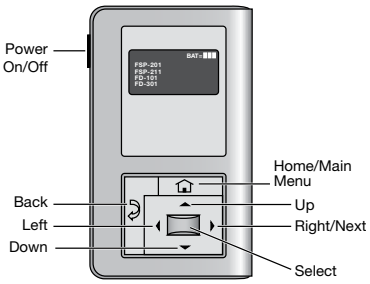

ECF EcoForm

Site & Area

Luminaire Configuration Information – EcoForm with LimeLight

ECF-LLC2

EcoForm with Limelight wireless technology

Controller pod attached to luminaire arm and includes radio, photocell and motion sensor with #2 lens for 8-15' mounting heights.

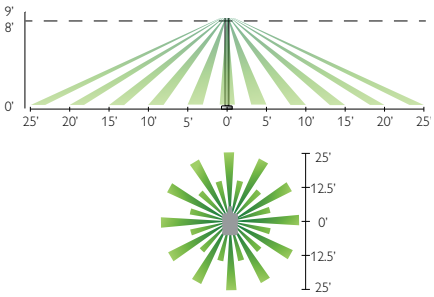

ECF-LLC3

EcoForm with Limelight wireless technology

Controller pod attached to luminaire arm and includes radio, photocell and motion sensor with #3 lens for 15-25' mounting heights.

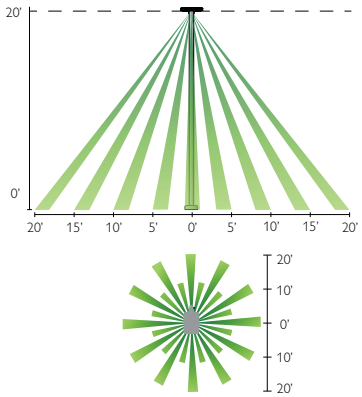

ECF-LLC4

EcoForm with Limelight wireless technology

Controller pod attached to luminaire arm and includes radio, photocell and motion sensor with #4 lens for 25-40' mounting heights.

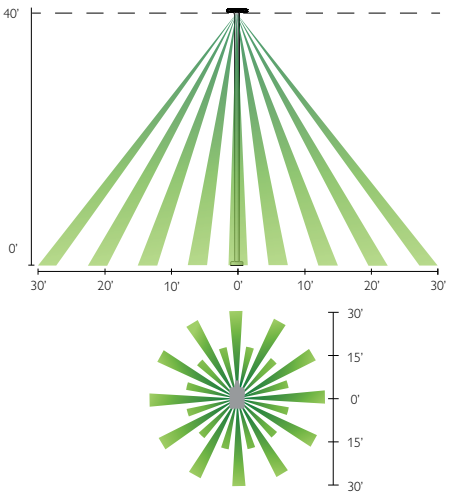

Luminaire Configuration Information – EcoForm with LimeLight

ECF-LLC(#)

With this configuration, the controller pod is mounted to the luminaire arm. One controller is required per luminaire. There are three different motion sensor configurations available. Each one corresponds to the desired mounting height that for your specific application. See motion response detection ranges below.

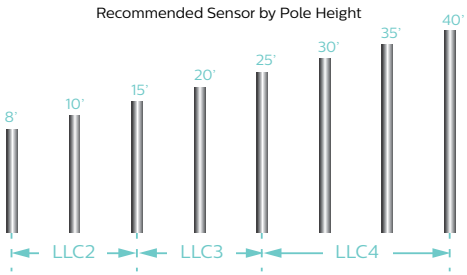

Controller Pod

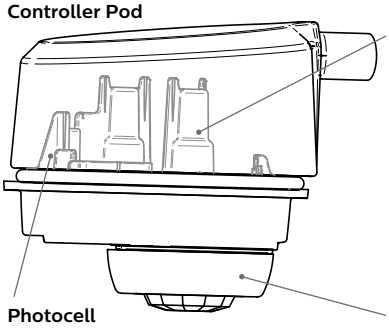

Photocell

- Ambient light photocell on every wireless radio that averages the light levels of up to 5 controllers for an accurate reading and optimal light harvesting activity.
- Reports ambient light readings to 1500 Fc.

Wireless Radio

- 1.8 Watts max (no load draw)
- Operating voltage 102-277V RMS
- Communicates using the ZigBee protocol
- Carries out dimming commands from gateway
- Reports internal PCB temperature
- Transmission Systems Operating within the band 2400-2483.5Mhz. IEEE 802.15.4
- ROHS Compliant

Motion Response

- Three different lens configurations
- Detects motion through passive InfraRed sensing technology
- Connects directly to radio through modular jack
- Three different mounting heights and detecion ranges available

Luminaire Configuration Information – EcoForm with LimeLight (Continued)

Gateway

Overview: One gateway is included with the wireless controls system. The gateway opens up communication with the wireless radios installed with the EcoForm luminaires (or pole), allowing you to control your fixtures straight from the web. One LimeLight gateway can communicate with up to 800 fixtures. Typically one unit is required per parking lot.

Installation: Gateway has 4 blind threaded holes on the back side that accept 10-32 screws. Mount spacing is 10.41" across and 14.19" vertical.

Requirements: The gateway must be mounted in a secure on-site location. The gateway requires 120V. Distance of gateway to the first radio varies upon application; contact factory. Strong internet connection required.

Specifications:

- High density RF Mesh coordinator
- Ethernet or wireless internet connection to LimeLight server
- Proprietor of software "rules of operation"
- Watertight Ethernet connections
- Highly protected, long life ac/dc power supply
- Single board, ARM compliant 520Mhz Intel computer.
- Operating Temperature -20°C to 55˚C
- Tamper proof housing

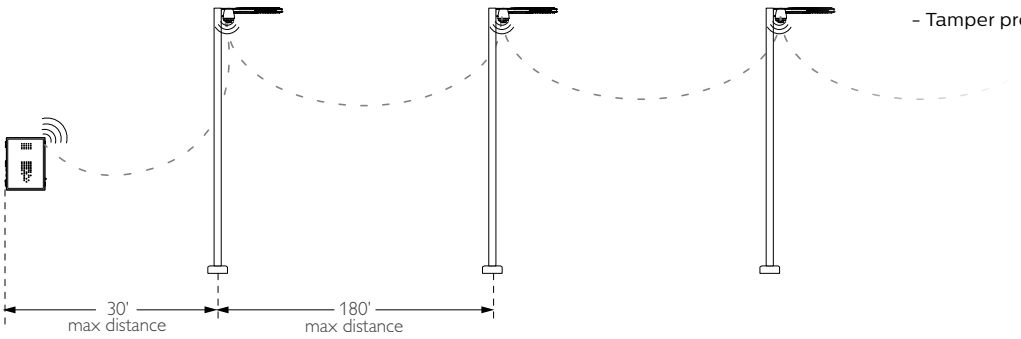

Front View

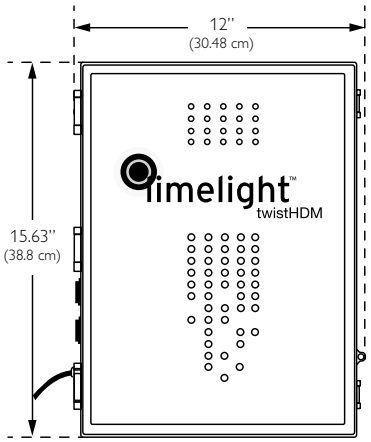

Back View

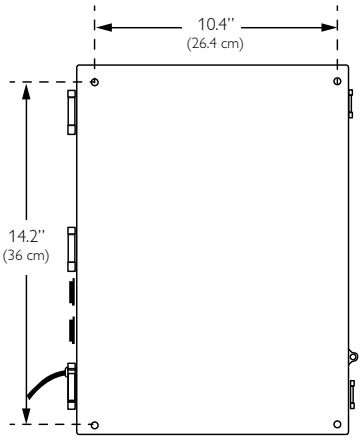

Side View

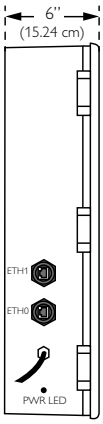

ECF EcoForm

Site & Area

Specifications

Housing

One piece die cast aluminum housing with integral arm and separate,self retained hinged, one piece die cast door frame.

IP Rating

LED light engine rated IP66.

Vibration Resistance

EcoForm with Standard Arm carries a 3G vibration rating that conforms to standards set forth by ANSI C136.31. Testing includes vibration to 3G acceleration in three axes, all performed on the same luminaire.

Electrical

Driver efficiency (>90% standard). 120-480V available (restrictions apply). Open/short circuit protection. Optional 0-10V dimming to 10% power. RoHS compliant. Surge protector standard. 10KA per ANSI/IEEE C62.41.2.

LED Board and Array

32, 48, or 64 LEDs. Color temperatures: 3000K, 4000K, 5700K +/- 250K. Minimum CRI of 70. Aluminum metal clad board. RoHS compliant.

LED Thermal Management

The housing design allows the one piece housing to provide excellent thermal management critical to long LED system life.

Energy Saving Benefits

System efficacy up to 95 lms/W with significant energy savings over Pulse Start Metal Halide luminaires. Optional control options provide added energy savings during unoccupied periods.

Wireless Controls

The LimeLight wireless Controls System includes: gateway, controller pod (with wireless radio, motion response, and photocell), and commissioning/training. LimeLight is an intelligent web-based system that operates through a high density mesh (HDM) wireless technology. Wireless radios with motion response and photocell sensors are integrated with PureForm luminaires, and enable the fixtures to communicate via the ZigBee protocol. The gateway is a mini computer that connects to the internet, and is located in a secure location. The central LimeLight database channels communication to and from the gateway, allowing data to be viewed or managed through the web-based graphical user interface (GUI). See LimeLight pages for details and technical information.

Motion Sensors

ECF-MR50, ECF-APD-MRO, ECF-MRI, ECF-APD-MRI luminaires may be specified for additional energy savings during unoccupied periods. See pages 4-6 for complete details.

Optical Systems

Type 2, 3, 4, and 5 distributions available. Internal Shield option mounts to LED optics and is available with Type 2, 3, and 4 distributions to control backlight.

Mounting

Standard luminaire arm mounts to 4" round poles. Square pole adapter included with every luminaire. Round Pole Adapter (RPA) required for 3-3.9" poles.

Retrofit Arm Mount

EcoForm features an innovative retrofit arm kit. When specified with the retrofit arm (RAM) option, EcoForm seamlessly simplifies site conversions to LED by eliminating the need for additional pole drilling on most existing poles. RAM will be boxed separately.

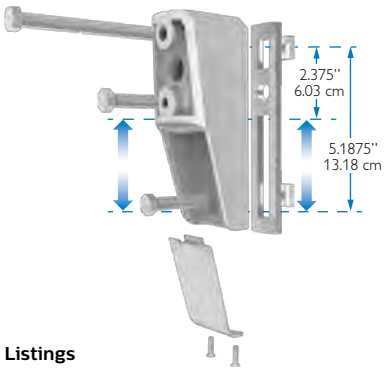

Listings

ETL/cETL listed to the UL 1598 standard, suitable for Wet Locations. Suitable for use in ambients from -40° to 40°C (-40° to 104°F). The quality systems of this facility have been registered by UL to the ISO 9001 series standards. All EcoForm luminaires equipped with NW and CW are DesignLights Consortium® qualified.

Finish

Each standard color luminaire receives a fade and abrasion resistant, electrostatically applied, thermally cured, triglycidal isocyanurate (TGIC) textured polyester powdercoat finish. Standard colors include bronze (BRP), black (BLP), white (WP), and natural aluminum (NP). Consult factory for specs on optional or custom colors.

Warranty

EcoForm luminaires feature a 5 year limited warranty. Philips Gardco LED luminaires with LED arrays feature a 5 year limited warranty covering the LED arrays. LED Drivers also carry a 5 year limited warranty. Motion sensors are covered by warranty for 5 years by the motion sensor manufacturer.

LED Performance

Predicted Lumen Depreciation Data[1]

Ambient Temperature °C	Driver (mA)	Calculated L_{70} Hours[1,2]	L_{70} Per TM-21[2,3]	Lumen Maintenance % @ 60,000 hours
Up to 40 °C	Up to 1050 mA	> 350,000 hours	> 60,000 hours	97%

1. Predicted performance derived from LED manufacturer's data and engineering design estimates, based on IESNA LM-80 methodology. Actual experience may vary due to field application conditions.
2. L70 is the predicted time when LED performance depreciates to 70% of initial lumen output.
3. Calculated per IESNA TM21-11. Published L70 hours limited to 6 times actual LED test hours.

© 2014 Koninklijke Philips N.V. All rights reserved.
Philips reserves the right to make changes in specifications and/or to discontinue any product at any time without notice or obligation and will not be liable for any consequences resulting from the use of this publication.
philips.com/luminaires

Philips Lighting, North America Corporation
200 Franklin Square Drive, Somerset, NJ 08873
Tel. 855-486-2216

Imported by: Philips Lighting,
A division of Philips Electronics Ltd.
281 Hillmount Rd, Markham, ON, Canada L6C 2S3
Tel. 800-668-9008

Philips Chloride VE Series Exit Sign
VEGWEM

CE-15050

Commercial Exit Signs

VE Series

Value+ Economy Grade Thermoplastic

VE

VRE (Remote Capability)

Specifier's Reference

Project
Type
Model No.
Comments

codes and standards

- UL listed to Standard 924
- NFPA 70 (National Electric Code)
- NFPA 101 (Life Safety Code)
- California Energy Commission
- UL listed for damp location

construction

- Black and white finishes are epoxy-based powder coat paint.
- Low profile, snap-together quick mount design.
- Flame rated, UV stable thermoplastic housing.

installation

- Universal wall/ceiling/end mounting.
- Canopy not required for flat wall mount. (electronics contained inside housing).
- Pop-out chevron directional indicators are easily removed when required.
- Exit sign mounts to a standard 4" square outlet box. (canopy provided)
- All exits signs are provided with an extra stencil face plate for double face sign applications.

electronics

- 120/277 VAC selectable input.
- VE Units: AC Only
  Input Power: 0.026A (120VAC)
  Input Power: 0.012A (277VAC)
- VE Units: Emergency
  Input Power: 0.033A (120VAC)
  Input Power: 0.017A (277VAC)
- VRE Units: Emergency
  Input Power: 0.030A (120VAC)
  Input Power: 0.014A (277VAC)
- Surge protection, low voltage disconnect, AC lockout installation, brown out protection, and constant current charger.

battery

- VE Exits contain 6V maintenance free nickel cadmium battery with a service life of 8 to 10 years and a operating temperature range of 20˚F (-7˚C) to 104˚F (40˚C).
- VRE exits contain a maintenance free sealed lead acid battery with a service life of 5 to 7 years and a operating temperature range of 65˚F (19˚C) to 85˚F (30˚C).
- Provides 90 minutes of emergency illumination.

lamps

- Bright red or green energy efficient LED lamps. Uniform 6" letter illumination (3/4" stroke).

remote capacity

- Optional remote capacity model includes 6V maintenance-free sealed lead acid batteries.
- Supplies 90 minutes of emergency power for exit sign plus an additional 22W of 6V-DC load.

warranty

- Three year warranty on unit.

Green Product Choice: VERWEM

Exit Signs

Catalog Number	Letter Color	Housing Color	Operation	Optional Feature
VERW	Red	White	AC only	
VERB	Red	Black	AC only	
VEGW	Green	White	AC only	
VEGB	Green	Black	AC only	
VERWEM	Red	White	Emergency (nicad battery)	
VERWEMSD	Red	White	Emergency (nicad battery)	Self Diagnostic Circuitry
VERBEM	Red	Black	Emergency (nicad battery)	
VEGWEM	Green	White	Emergency (nicad battery)	
VEGWEMSD	Green	White	Emergency (nicad battery)	Self Diagnostic Circuitry
VEGBEM	Green	Black	Emergency (nicad battery)	

Green Product Choice: VRERWEM

Exit Signs With Remote Capability

Catalog Number	Letter Color	Housing Color	Operation	Remote Capacity
VRERWEM	Red	White	Emergency	22 Watts (lead acid battery)
VREGWEM	Green	White	Emergency	22 Watts (lead acid battery)

Accessories

VEPMC – Pendant mount canopy, white, for VE & VRE only (requires stem assembly).
PVS2 – Polycarbonate shield for VE only.
WG4 – Wire guard for VE & VRE only.

Note:

All exit signs are universal (single face with an extra stencil face plate)
Canopy provided on all exits.

© 2013 Koninklijke Philips Electronics N.V. All rights reserved.
Specifications are subject to change without notice.

PHILIPS CHLORIDE

dimensions

VE

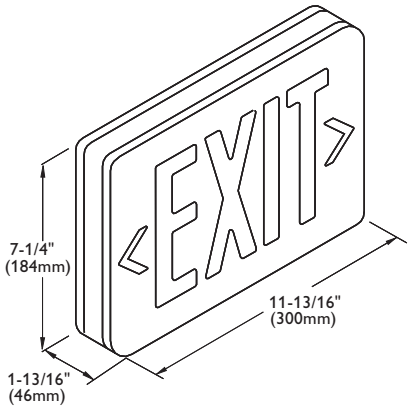

Canopy

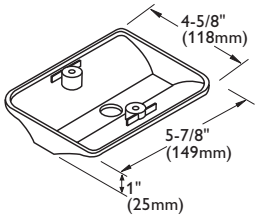

VRE

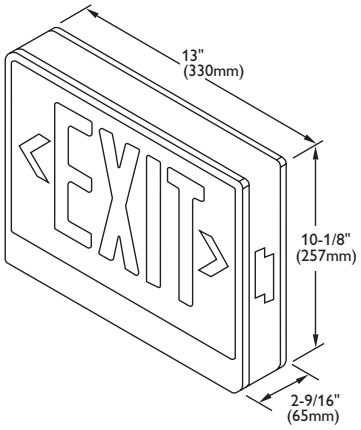

© 2013 Koninklijke Philips Electronics N.V. All rights reserved.
Specifications are subject to change without notice.

CE-15050 03/13

Philips Lighting Company
200 Franklin Square Drive
Somerset, NJ 08873
Phone: 855-486-2216
www.philips.com/luminaires

Philips Lighting Company
281 Hillmount Road
Markham ON, Canada L6C 2S3
Phone: 800-668-9008
www.philips.com/luminaires

Mechanical Cutsheets

Indoor Unit

June 29, 2015

MITSUBISHI ELECTRIC

COOLING & HEATING

M-SERIES

SUBMITTAL DATA: SLZ-KA09NA

9,000 BTU/H CEILING-CASSETTE INDOOR UNIT FOR MXZ MULTI-ZONE HEAT-PUMP SYSTEMS

Job Name:	
System Reference:	Date:

SLZ-KA09NA

GENERAL FEATURES

- Four-way 2'x2' ceiling-cassette indoor unit for ceiling recessed applications
- Built-in drain mechanism for condensate removal; lifts to 19-11/16"
- Wide air-flow pattern for better air distribution
- Design features ventilation air intake knockout
- Long-life air filter included with indoor unit
- Indoor unit powered from outdoor unit using A-Control
- Choice of fan speed: Low, Medium, High
- Automatic restart following a power outage
- Limited warranty: five years parts and seven years compressors

ACCESSORIES

Indoor Unit

□ Grille (SLP-15AAUW; required - shipped with unit)

Controller Options

□ Wireless Wall-mounted Remote Controller Kit (MHK1)*
□ Portable Central Controller (MCCH1)*
□ Outdoor Air Sensor (MOS1)*
□ Wired Wall-mounted Controller (PAR-31MAA)*
□ Simple MA Remote Controller (PAC-YT53CRAU)*

*See Submittal for information on each option.

□ Remote Temperature Sensor (M21-JKO-307)
□ Hand-held Wireless Remote Controller (PAR-FL32MA;req.PAR-FA32MA-E)
□ Wireless Signal Receiver PAR-FA32MA (for PAR-FL32MA)
□ Lockdown Bracket for Hand-held Controller (RCMKP1CB)

SPECIFICATIONS

Cooling Capacity* . . . . . 8,400 Btu/h
Heating Capacity at 47°F* . . . . . 10,900 Btu/h

*** Rating Conditions per AHRI Standard**
Cooling | Indoor: 80º F (27º C) DB / 67º F (19º C) WB
Cooling | Outdoor: 95º F (35º C) DB / 75º F (24º C) WB
Heating at 47ºF | Indoor: 70º F (21º C) DB / 60º F (16º C) WB
Heating at 47ºF | Outdoor: 47º F (8º C) DB / 43º F (6º C) WB

(For data on specific indoor units [all ducted, all non-ducted, and both ducted and non-ducted] combinations, see the MXZ Technical and Service Manual.)

Electrical Requirements
Power Supply . . . . . 208 / 230V, 1-Phase, 60 Hz
MCA . . . . . 1 A

Voltage
Indoor - Outdoor S1-S2 . . . . . AC 208 / 230V
Indoor - Outdoor S2-S3 . . . . . DC ±24V
Fan Motor (ECM) . . . . . 0.23 F.L.A.

Airflow (Lo - Med - Hi) . . . . . 280 - 320 - 350 Dry CFM
250 - 290 - 320 Wet CFM

Air Filter . . . . . Polypropylene Honeycomb

Sound Pressure Level (Lo - Med - Hi) . . . . . 29 - 32 - 38 dB(A)

DIMENSIONS	UNIT INCHES / MM	GRILLE INCHES / MM
W	22-7/16 / 570	25-5/8 / 650
D	22-7/16 / 570	25-5/8 / 650
H	9-1/4 / 235	13/16 / 20

Weight (Unit/Grille)
Lbs... . . . . 36 / 7
kg. . . . . 16.5 / 3
External Finish (Unit/Grille) . . . . . Galvanized-steel Sheets / Munsell 6.4Y 8.9 / 0.4
Field Drainpipe Size O.D. . . . . 1-1/4" / 32 mm

Refrigerant Type R410A
Refrigerant Pipe Size O.D.
Gas Side . . . . . 3/8" / 9.52 mm
Liquid Side. . . . . 1/4" / 6.35 mm
Connection Method . . . . . Flared

R410A INVERTER

Specifications are subject to change without notice.
© 2014 Mitsubishi Electric US, Inc.

DIMENSIONS: SLZ-KA09NA

Unit : inch (mm)

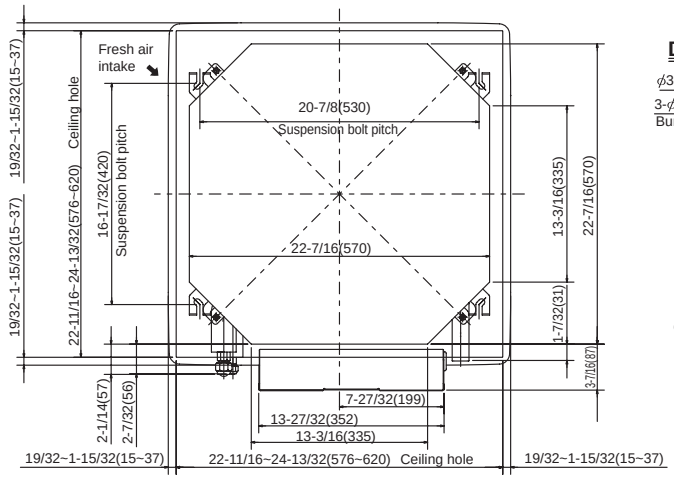

Detail drawing of fresh air intake

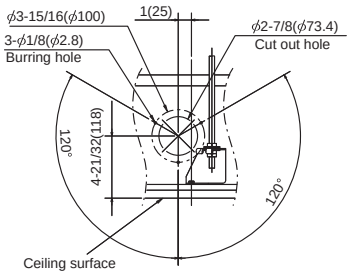

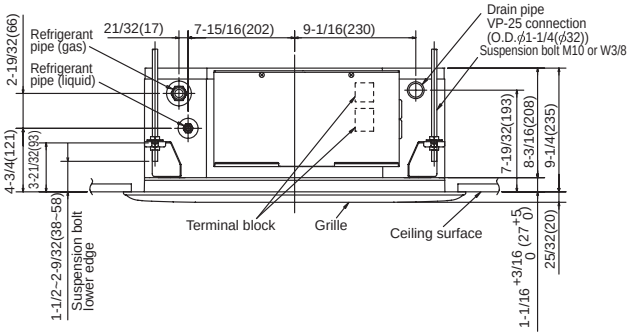

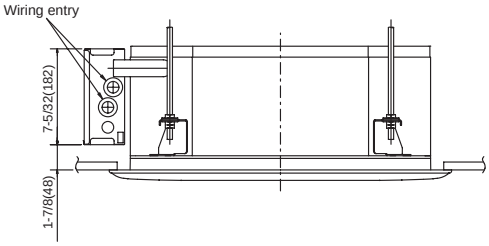

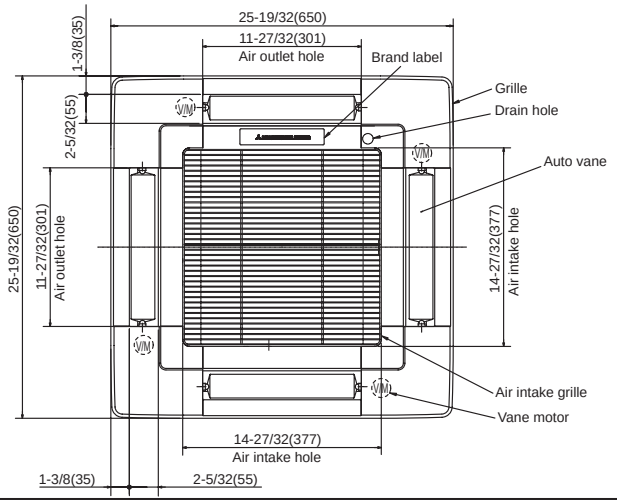

Models	Refrigerent pipe (liquid)	Refrigerent pipe (gas)
SLZ-KA09NA	1/4 inch (ϕ 6.35mm) flared connection	3/8 inch (ϕ 9.52mm) flared connection
SLZ-KA12NA	1/4 inch (ϕ 6.35mm) flared connection	3/8 inch (ϕ 9.52mm) flared connection
SLZ-KA15NA	1/4 inch (ϕ 6.35mm) flared connection	1/2 inch (ϕ 12.7mm) flared connection

AHRI CERTIFIED™ www.ahridirectory.org
Unitary Small HP
AHRI Standard 210/240
Certification applies only when the complete system is listed with AHRI.

C ETL LISTED US
Intertek

MITSUBISHI ELECTRIC
COOLING & HEATING

1340 Satellite Boulevard
Suwanee, GA 30024
Toll Free: 800-433-4822
www.mehvac.com

FORM# SLZ-KA09NA for MXZ MULTI-ZONE SYSTEMS - 201411

Specifications are subject to change without notice.

© 2014 Mitsubishi Electric US, Inc.

MITSUBISHI ELECTRIC
COOLING & HEATING

M-SERIES

SUBMITTAL DATA: SLZ-KA12NA

12,000 BTU/H CEILING-CASSETTE INDOOR UNIT FOR MXZ MULTI-ZONE HEAT-PUMP SYSTEMS

Job Name:	
System Reference:	Date:

SLZ-KA12NA

GENERAL FEATURES

- Four-way 2'x2' ceiling-cassette indoor unit for ceiling recessed applications
- Built-in drain mechanism for condensate removal; lifts to 19-11/16"
- Wide air-flow pattern for better air distribution
- Design features ventilation air intake knockout
- Long-life air filter included with indoor unit
- Indoor unit powered from outdoor unit using A-Control
- Choice of fan speed: Low, Medium, High
- Automatic restart following a power outage
- Limited warranty: five years parts and seven years compressors

ACCESSORIES

Indoor Unit

- □ Grille (SLP-15AAUW; required - shipped with unit)

Controller Options

- □ Wireless Wall-mounted Remote Controller Kit (MHK1)*
- □ Portable Central Controller (MCCH1)*
- □ Outdoor Air Sensor (MOS1)*
- □ Wired Wall-mounted Controller (PAR-31MAA)*
- □ Simple MA Remote Controller (PAC-YT53CRAU)*

*See Submittal for information on each option.

- □ Remote Temperature Sensor (M21-JKO-307)
- □ Hand-held Wireless Remote Controller (PAR-FL32MA;req.PAR-FA32MA-E)
- □ Wireless Signal Receiver PAR-FA32MA (for PAR-FL32MA)
- □ Lockdown Bracket for Hand-held Controller (RCMKP1CB)

SPECIFICATIONS

Cooling Capacity* . . . . . 11,100 Btu/h
Heating Capacity at 47°F* . . . . . 13,600 Btu/h

*** Rating Conditions per AHRI Standard**
Cooling | Indoor: 80º F (27º C) DB / 67º F (19º C) WB
Cooling | Outdoor: 95º F (35º C) DB / 75º F (24º C) WB
Heating at 47ºF | Indoor: 70º F (21º C) DB / 60º F (16º C) WB
Heating at 47ºF | Outdoor: 47º F (8º C) DB / 43º F (6º C) WB

(For data on specific indoor units [all ducted, all non-ducted, and both ducted and non-ducted] combinations, see the MXZ Technical and Service Manual.)

Electrical Requirements
Power Supply . . . . . 208 / 230V, 1-Phase, 60 Hz
MCA . . . . . 1 A
Voltage
Indoor - Outdoor S1-S2 . . . . . AC 208 / 230V
Indoor - Outdoor S2-S3 . . . . . DC ±24V

Fan Motor (ECM) . . . . . 0.28 F.L.A.

Airflow (Lo - Med - Hi) . . . . . 280 - 320 - 390 Dry CFM
250 - 290 - 350 Wet CFM

Air Filter . . . . . Polypropylene Honeycomb

Sound Pressure Level (Lo - Med - Hi) . . . . . 30 - 34 - 39 dB(A)

DIMENSIONS	UNIT INCHES / MM	GRILLE INCHES / MM
W	22-7/16 / 570	25-5/8 / 650
D	22-7/16 / 570	25-5/8 / 650
H	9-1/4 / 235	13/16 / 20

Weight (Unit/Grille)
Lbs... . . . . 36 / 7
kg. . . . . 16.5 / 3
External Finish (Unit/Grille) . . . . . Galvanized-steel Sheets / Munsell 6.4Y 8.9 / 0.4
Field Drainpipe Size O.D. . . . . 1-1/4" / 32 mm

Refrigerant Type R410A
Refrigerant Pipe Size O.D.
Gas Side . . . . . 3/8" / 9.52 mm
Liquid Side. . . . . 1/4" / 6.35 mm
Connection Method . . . . . Flared

R410A INVERTER

Specifications are subject to change without notice.
© 2014 Mitsubishi Electric US, Inc.

DIMENSIONS: SLZ-KA12NA

Unit : inch (mm)

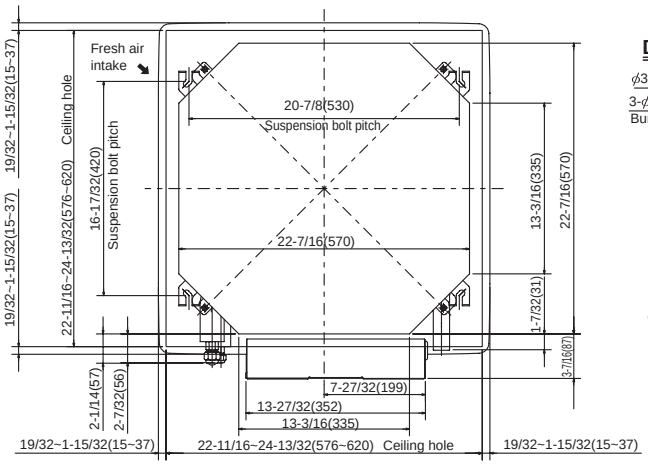

Detail drawing of fresh air intake

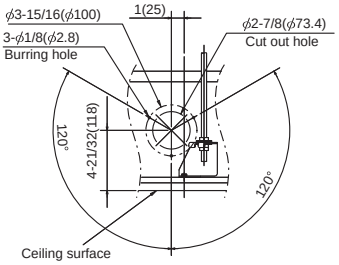

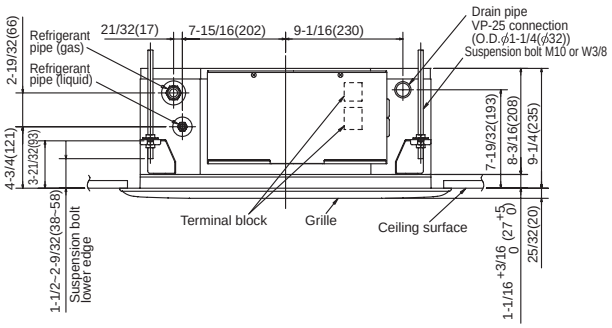

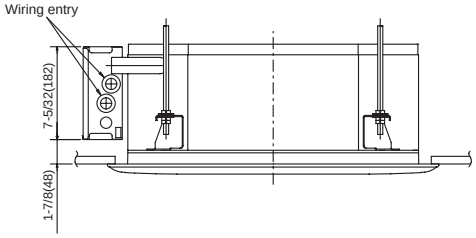

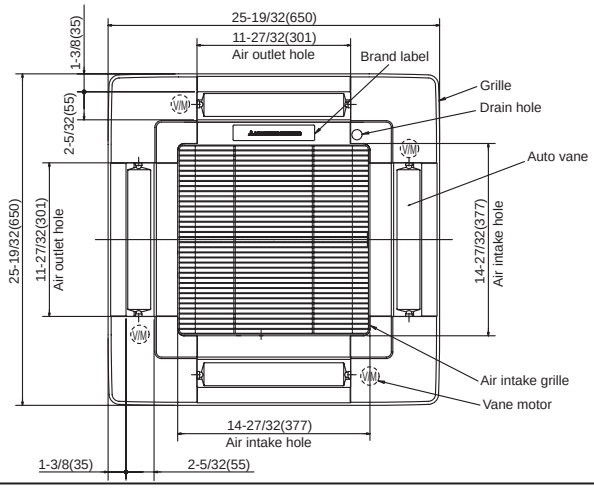

Models	Refrigerent pipe (liquid)	Refrigerent pipe (gas)
SLZ-KA09NA	1/4 inch (ϕ 6.35mm) flared connection	3/8 inch (ϕ 9.52mm) flared connection
SLZ-KA12NA	1/4 inch (ϕ 6.35mm) flared connection	3/8 inch (ϕ 9.52mm) flared connection
SLZ-KA15NA	1/4 inch (ϕ 6.35mm) flared connection	1/2 inch (ϕ 12.7mm) flared connection

AHRI CERTIFIED™ www.ahridirectory.org
Unitary Small HP
AHRI Standard 210/240
Certification applies only when the complete system is listed with AHRI.

C ETL LISTED US
Intertek

MITSUBISHI ELECTRIC
COOLING & HEATING

1340 Satellite Boulevard
Suwanee, GA 30024
Toll Free: 800-433-4822
www.mehvac.com

FORM# SLZ-KA12NA for MXZ MULTI-ZONE SYSTEMS - 201411
Specifications are subject to change without notice.
© 2014 Mitsubishi Electric US, Inc.

Outdoor Unit

MITSUBISHI ELECTRIC
COOLING & HEATING

ENERGY STAR

M-SERIES

SUBMITTAL DATA: MXZ-2C20NAHZ

MULTI-INDOOR INVERTER HEAT-PUMP SYSTEM

Job Name:	
System Reference:	Date:

GENERAL FEATURES

- Highly energy-efficient system that features 100% heating capacity at 5°F with guaranteed capacity down to -13° F
- Quiet operation
- Built-in base pan heater to prevent ice in drain pan
- Limited warranty: five years parts and seven years compressors

ACCESSORIES

- ☐ 3/8" x 1/2" Port Adapter (MAC-A454JP; for use with 15,000 Btu/h Indoor units)
- ☐ M-NET Adapter (PAC-IF01MNT-E)
- ☐ Drain Socket (PAC-SG60DS-E)
- ☐ Airflow Guide (PAC-SH96SG-E)

Outdoor Unit: MXZ-2C20NAHZ

INVERTER

R410A

(For data on specific indoor units, see the MXZ-C Technical and Service Manual.)

Specifications			Model Name
Unit Type			MXZ-2C20NAHZ
Cooling* (Non-ducted / Ducted)	Rated Capacity	Btu/h	18,000 / 20,000
	Capacity Range	Btu/h	6,000 - 20,000
	Rated Total Input	W	1,334 / 1,819
Heating at 47°F* (Non-ducted / Ducted)	Rated Capacity	Btu/h	22,000 / 22,000
	Capacity Range	Btu/h	7,400 - 25,500
	Rated Total Input	W	1,612 / 1,748
Heating at 17°F* (Non-ducted/Ducted)	Rated Capacity	Btu/h	13,700 / 13.700
	Maximum Capacity	Btu/h	22,000 / 22,000
	Rated Total Input	W	1,450 / 1,588
Heating at 5°F*	Maximum Capacity	Btu/h	22,000
Electrical Requirements	Power Supply	Voltage, Phase, Hertz	208 / 230V, 1-Phase, 60 Hz
	Recommended Fuse/Breaker Size	A	40
	MCA	A	29
Voltage	Indoor - Outdoor S1-S2	V	AC 208 / 230
	Indoor - Outdoor S2-S3	V	DC ±24
Compressor			DC INVERTER-driven Twin Rotary
Fan Motor (ECM)		F.L.A.	1.9
Sound Pressure Level	Cooling	dB(A)	54
	Heating		58
External Dimensions (H x W x D)		In / mm	41-9/32 x 37-13/32 x 13 1048 x 950 x 330
Net Weight		Lbs / kg	187 / 85
External Finish			Munsell No. 3Y 7.8/11
Refrigerant Pipe Size O.D. — Eight Ports	Liquid (High Pressure)	In / mm	1/4 / 6.35
	Gas (Low Pressure)		A,B: 3/8 / 9.52
Max. Refrigerant Line Length		Ft / m	164 / 50
Max. Piping Length for Each Indoor Unit		Ft / m	82 / 25
Max. Refrigerant Pipe Height Difference	If IDU is Above ODU	Ft / m	49 / 15
	If IDU is Below ODU		49 / 15
Connection Method			Flared/Flared
Refrigerant			R410A

*** Rating Conditions per AHRI Standard:**

Cooling | Indoor: 80° F (27° C) DB / 67° F (19° C) WB
Cooling | Outdoor: 95° F (35° C) DB / W.B. 23.9° C (75° F)

Heating at 47°F | Indoor: 70° F (21° C) DB / 60° F (16° C) WB
Heating at 47°F | Outdoor: 47° F (8° C) DB / 43° F (6° C) WB

Heating at 17° F | Indoor: 70° F (21° C) DB
Heating at 17° F | Outdoor: 17° F (-8° C) DB / 15° F (-9° C) WB

Specifications are subject to change without notice.

© 2015 Mitsubishi Electric US, Inc.

SPECIFICATIONS: MXZ-2C20NAHZ , contd.

Operating Range:

	Outdoor
Cooling	D.B. 23 to 115° F [D.B. −5 to 46° C]*1
Heating	D.B. -13 to 70° F [D.B. −25 to 21° C]

*1. D.B. 5 to 115° F [D.B. −15 to 46° C],
when an optional Air Outlet Guide is installed.

Energy Efficiencies:

Indoor Unit Type	SEER	EER	HSPF	COP @ 47°F	COP @ 17°F
Non-ducted (09 + 09)	17.0	13.5	9.8	4.00	2.77
Ducted and Non-ducted	16.00	12.25	9.65	3.85	2.65
Ducted (09 + 12)	15.0	11.0	9.5	3.69	2.53

Multi-zone Indoor/Outdoor Combination Table

	MSZ-FH*	MSZ-GE*	MFZ*	MVZ*	SEZ-KD*	SLZ*	PCA (A24)*	PLA*	PEAD*
MXZ-2C20NAHZ	9,12,15 OK 18 NO	6,9,12,15 OK 18,24 NO	9,12 OK 18 NO	12 OK 18,24,30,36 NO	9,12,15 OK 18 NO	9,12 OK 18 NO	NO	NO	NO

*** Refer to indoor unit submittal.**

Notes:
- Minimum of two Indoor Units must be connected to the MXZ-2C20NAHZ.
- Minimum installed capacity cannot be less than 12,000 Btu/h.
- System can operate with only one Indoor Unit turned on.
- May connect to any style indoor unit or combination.
- Information provided at 208/230V.
  Refer to the MXZ-C Technical & Service Manual for detailed specifications and additional information per Indoor Unit Combination.

MVZ CONNECTION RULES:
- Only 1 MVZ may be used on any system.
- When an MVZ is connected, total connected capacity must be 100% or less.
- When an MVZ is connected, no P-Series indoor units can be used (PCA, PLA, or PEAD).

Notes:

Specifications are subject to change without notice.
© 2015 Mitsubishi Electric US, Inc.

MXZ-2C20NAHZ OPERATIONAL PERFORMANCE

DUCTED:

Operational Performance for Indoor Unit Combinations (Unit A + Unit B + Unit C)	Cooling Capacity Range (Btu/h) / Heating Capacity Range (Btu/h)		Power Usage Range (W)	Current (208/230V)
	Unit A	Unit B		
9	9000	0	TBD	
	10900	0		
12	12000	0		
	13600	0		
15	15000	0		
	18000	0		
9 + 9	9000	9000		
	10900	10900		
9 + 12	8571	11429		
	9429	12571		
9 + 15	7500	12500		
	8250	13750		
12 + 12	10000	10000		
	11000	11000		

NON-DUCTED:

Operational Performance for Indoor Unit Combinations (Unit A + Unit B + Unit C)	Cooling Capacity Range (Btu/h) / Heating Capacity Range (Btu/h)		Power Usage Range (W)	Current (208/230V)
	Unit A	Unit B		
6	6000		TBD	
	7400			
9	9000			
	11000			
12	12000			
	14400			
15	14000			
	18000			
6 + 6	6000	6000		
	7400	7400		
6 + 9	6000	9000		
	7360	11040		
6 + 12	6000	12000		
	7333	14667		
6 + 15	5714	14286		
	6286	15714		
9 + 9	9000	9000		
	11000	11000		
9 + 12	8571	11429		
	9429	12571		
9 + 15	7500	12500		
	8250	13750		
12 + 12	10000	10000		
	11000	11000		

Specifications are subject to change without notice.

© 2015 Mitsubishi Electric US, Inc.

DIMENSIONS: MXZ-2C20NAHZ

Unit: inch (mm)

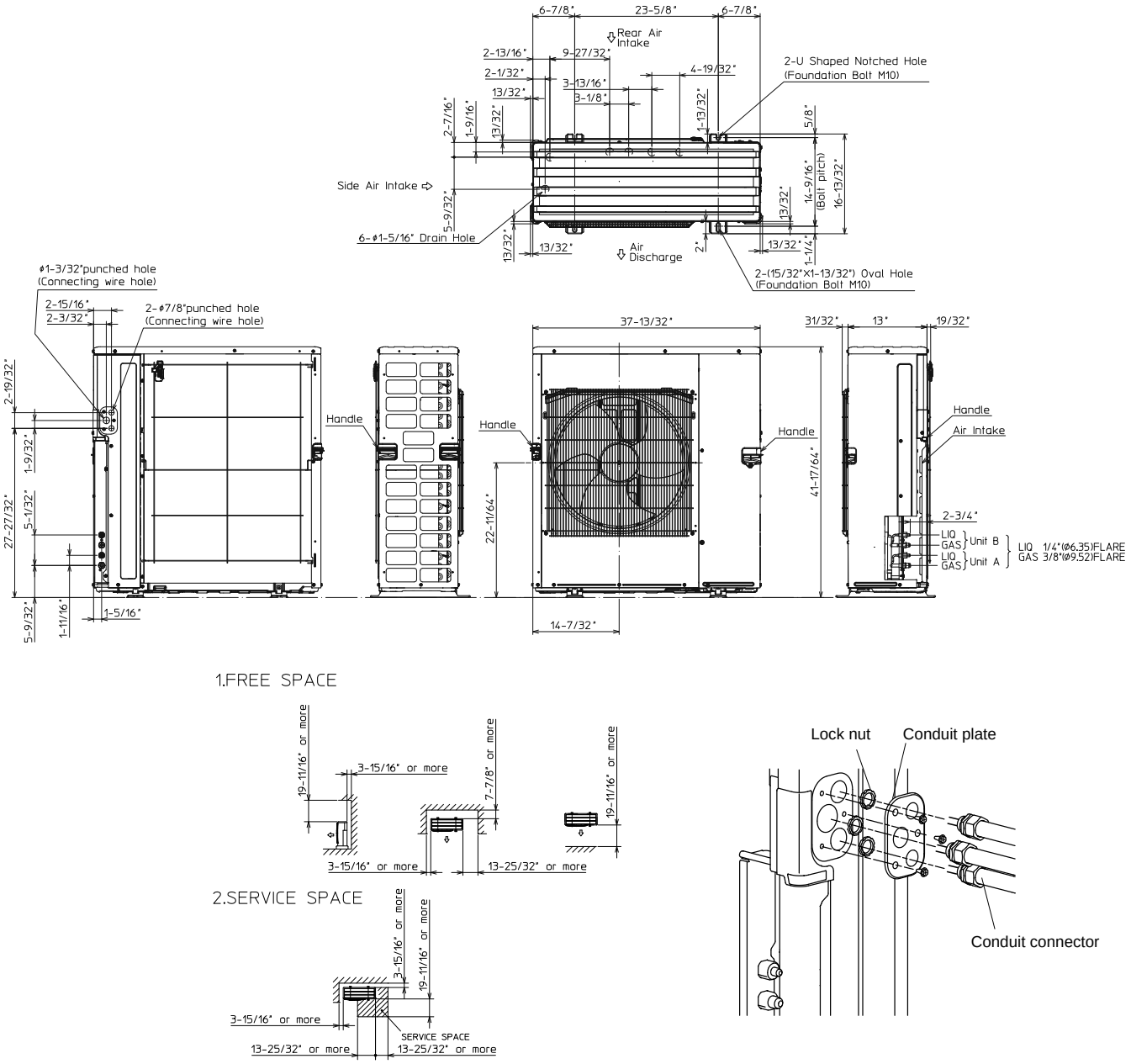

1340 Satellite Boulevard
Suwanee, GA 30024
Toll Free: 800-433-4822
www.mehvac.com

FORM# MXZ-2C20NAHZ for Multiple Indoor Unit Styles - 201505

Specifications are subject to change without notice.
© 2015 Mitsubishi Electric US, Inc.

MITSUBISHI ELECTRIC
COOLING & HEATING

ENERGY STAR

M-SERIES

SUBMITTAL DATA: MXZ-3C30NAHZ

MULTI-INDOOR INVERTER HEAT-PUMP SYSTEM

Job Name:	
System Reference:	Date:

GENERAL FEATURES

- Highly energy-efficient system that features 100% heating capacity at 5°F with guaranteed capacity down to -13° F
- Quiet operation
- Built-in base pan heater to prevent ice in drain pan
- Limited warranty: five years parts and seven years compressors

ACCESSORIES

- ☐ 3/8" x 1/2" Port Adapter (MAC-A454JP-E)
- ☐ 1/2" x 3/8" Port Adapter (MAC-A455JP-E)
- ☐ 1/2" x 5/8" Port Adapter (MAC-A456JP-E)
- ☐ 1/4" x 3/8" Port Adapter (PAC-493PI)
- ☐ 3/8" x 5/8" Port Adapter (PAC-SG76RJ-E)
- ☐ M-NET Adapter (PAC-IF01MNT-E)
- ☐ Drain Socket (PAC-SG60DS-E)
- ☐ Airflow Guide (PAC-SH96SG-E)

Outdoor Unit: MXZ-3C30NAHZ

INVERTER

R410A

(For data on specific indoor units, see the MXZ-C Technical and Service Manual.)

Specifications			Model Name
Unit Type			MXZ-3C30NAHZ
Cooling* (Non-ducted / Ducted)	Rated Capacity	Btu/h	28,400 / 27,400
	Capacity Range	Btu/h	6,000 - 28,400
	Rated Total Input	W	2,272 / 2,661
Heating at 47°F* (Non-ducted / Ducted)	Rated Capacity	Btu/h	28,600 / 27,600
	Capacity Range	Btu/h	7,200 - 36,000
	Rated Total Input	W	2,096 / 2,187
Heating at 17°F* (Non-ducted/Ducted)	Rated Capacity	Btu/h	18,000 / 16,500
	Maximum Capacity	Btu/h	28,600 / 27, 600
	Rated Total Input	W	1,991 / 1,993
Heating at 5°F*	Maximum Capacity	Btu/h	28,600
Electrical Requirements	Power Supply	Voltage, Phase, Hertz	208 / 230V, 1-Phase, 60 Hz
	Recommended Fuse/Breaker Size	A	40
	MCA	A	30
Voltage	Indoor - Outdoor S1-S2	V	AC 208 / 230
	Indoor - Outdoor S2-S3	V	DC ±24
Compressor			DC INVERTER-driven Twin Rotary
Fan Motor (ECM)		F.L.A.	1.9
Sound Pressure Level	Cooling	dB(A)	54
	Heating		58
External Dimensions (H x W x D)		In / mm	41-9/32 x 37-13/32 x 13 1048 x 950 x 330
Net Weight		Lbs / kg	189 / 86
External Finish			Munsell No. 3Y 7.8/11
Refrigerant Pipe Size O.D. — Eight Ports	Liquid (High Pressure)	In / mm	1/4 / 6.35
	Gas (Low Pressure)		A:1/2 / 12.7 ; B,C: 3/8 / 9.52
Max. Refrigerant Line Length		Ft / m	230 / 70
Max. Piping Length for Each Indoor Unit		Ft / m	82 / 25
Max. Refrigerant Pipe Height Difference	If IDU is Above ODU	Ft / m	49 / 15
	If IDU is Below ODU		49 / 15
Connection Method			Flared/Flared
Refrigerant			R410A

*** Rating Conditions per AHRI Standard:**

Cooling | Indoor: 80° F (27° C) DB / 67° F (19° C) WB
Cooling | Outdoor: 95° F (35° C) DB / W.B. 23.9° C (75° F)

Heating at 47°F | Indoor: 70° F (21° C) DB / 60° F (16° C) WB
Heating at 47°F | Outdoor: 47° F (8° C) DB / 43° F (6° C) WB

Heating at 17° F | Indoor: 70° F (21° C) DB
Heating at 17° F | Outdoor: 17° F (-8° C) DB / 15° F (-9° C) WB

Specifications are subject to change without notice.

© 2015 Mitsubishi Electric US, Inc.

SPECIFICATIONS: MXZ-3C30NAHZ, contd.

Operating Range:

	Outdoor
Cooling	D.B. 23 to 115° F [D.B. −5 to 46° C]*1
Heating	D.B. -13 to 70° F [D.B. −25 to 21° C]

*1. D.B. 5 to 115° F [D.B. −15 to 46° C],
when an optional Air Outlet Guide is installed.

Energy Efficiencies:

Indoor Unit Type	SEER	EER	HSPF	COP @ 47°F	COP @ 17°F
Non-ducted (06 + 06 + 09)	18.0	12.5	11.0	4.00	2.65
Ducted and Non-ducted	17.00	11.40	10.40	3.85	2.58
Ducted (09 + 09 + 09)	16.0	10.3	9.8	3.70	2.50

Multi-zone Indoor/Outdoor Combination Table

	MSZ-FH*	MSZ-GE*	MFZ*	MVZ*	SEZ-KD*	SLZ*	PCA (A24)*	PLA*	PEAD*
MXZ-3C30NAHZ	OK	OK	OK	12,18,24 OK 30,36 NO	OK	OK	OK	18,24 OK 12,30 NO	24 OK 30, 36 NO

*** Refer to indoor unit submittal.**

Notes:
- Minimum of two Indoor Units must be connected to the MXZ-3C30NAHZ.
- Minimum installed capacity cannot be less than 12,000 Btu/h.
- System can operate with only one Indoor Unit turned on.
- May connect to any style indoor unit or combination.
- Information provided at 208/230V.
  Refer to the MXZ-C Technical & Service Manual for detailed specifications and additional information per Indoor Unit Combination.

MVZ CONNECTION RULES:
- Only 1 MVZ may be used on any system.
- When an MVZ is connected, total connected capacity must be 100% or less.
- When an MVZ is connected, no P-Series indoor units can be used (PCA, PLA, or PEAD).

Notes:

Specifications are subject to change without notice.
© 2015 Mitsubishi Electric US, Inc.

MXZ-3C30NAHZ OPERATIONAL PERFORMANCE

DUCTED:

Operational Performance for Indoor Unit Combinations (Unit A + Unit B + Unit C)	Cooling Capacity Range (Btu/h) / Heating Capacity Range (Btu/h)			Power Usage Range (W)	Current (208/230V)
	Unit A	Unit B	Unit C		
9	9000	0	0	TBD	
	10900	0	0		
12	12000	0	0		
	13600	0	0		
15	15000	0	0		
	18000	0	0		
18	17200	0	0		
	21600	0	0		
24	24000	0	0		
	24000	0	0		
9 + 9	9000	9000	0		
	10900	10900	0		
9 + 12	9000	12000	0		
	9771	13029	0		
9 + 15	9000	15000	0		
	9000	15000	0		
9 + 18	8000	16000	0		
	8000	16000	0		
9 + 24	6545	17455	0		
	6545	17455	0		
12 + 12	12000	12000	0		
	12000	12000	0		
12 + 15	10667	13333	0		
	10667	13333	0		
12 + 18	9600	14400	0		
	9600	14400	0		
12 + 24	8000	16000	0		
	8000	16000	0		
15 + 15	12000	12000	0		
	12000	12000	0		
15 + 18	10909	13091	0		
	10909	13091	0		
18 + 18	12000	12000	0		
	12000	12000	0		
9 + 9 + 9	9000	9000	9000		
	9133	9133	9133		
9 + 9 + 12	8220	8220	10960		
	8280	8280	11040		
9 + 9 + 15	7473	7473	12455		
	7527	7527	12545		
9 + 9 + 18	6850	6850	13700		
	6900	6900	13800		
9 + 12 + 12	7473	9964	9964		
	7527	10036	10036		
9 + 12 + 15	6850	9133	11417		
	6900	9200	11500		
12 + 12 + 12	9133	9133	9133		
	9200	9200	9200		

Specifications are subject to change without notice.

© 2015 Mitsubishi Electric US, Inc.

MXZ-3C30NAHZ OPERATIONAL PERFORMANCE, contd.

NON-DUCTED:

Operational Performance for Indoor Unit Combinations (Unit A + Unit B + Unit C)	Cooling Capacity Range (Btu/h) / Heating Capacity Range (Btu/h)			Power Usage Range (W)	Current (208/230V)
	Unit A	Unit B	Unit C		
6	6000	0	0	TBD	
	7400	0	0		
9	9000	0	0		
	11000	0	0		
12	12000	0	0		
	14400	0	0		
15	14000	0	0		
	18000	0	0		
18	17200	0	0		
	21600	0	0		
24	22500	0	0		
	22600	0	0		
6 + 6	6000	6000	0		
	7400	7400	0		
6 + 9	6000	9000	0		
	7360	11040	0		
6 + 12	6000	12000	0		
	7333	14667	0		
6 + 15	5714	14286	0		
	6286	15714	0		
6 + 18	5750	17250	0		
	5750	17250	0		
6 + 24	4800	19200	0		
	4800	19200	0		
9 + 9	9000	9000	0		
	11000	11000	0		
9 + 12	8571	11429	0		
	9429	12571	0		
9 + 15	8625	14375	0		
	8625	14375	0		
9 + 18	8000	16000	0		
	8000	16000	0		
9 + 24	6545	17455	0		
	6545	17455	0		
12 + 12	11500	11500	0		
	11500	11500	0		
12 + 15	10667	13333	0		
	10667	13333	0		
12 + 18	9600	14400	0		
	9600	14400	0		
12 + 24	8000	16000	0		
	8000	16000	0		
15 + 15	12000	12000	0		
	12000	12000	0		
15 + 18	10909	13091	0		
	10909	13091	0		
18 + 18	12000	12000	0		
	12000	12000	0		
6 + 6 + 6	6000	6000	6000		
	7400	7400	7400		
6 + 6 + 9	6000	6000	9000		
	7371	7371	11057		
6 + 6 + 12	6000	6000	12000		
	7100	7100	14200		
6 + 6 + 15	5778	5778	14444		
	6311	6311	15778		
6 + 6 + 18	5680	5680	17040		
	5720	5720	17160		
6 + 6 + 24	4733	4733	18933		
	4767	4767	19067		

Specifications are subject to change without notice.

© 2015 Mitsubishi Electric US, Inc.

MXZ-3C30NAHZ OPERATIONAL PERFORMANCE, contd.

NON-DUCTED:

Operational Performance for Indoor Unit Combinations (Unit A + Unit B + Unit C)	Cooling Capacity Range (Btu/h) / Heating Capacity Range (Btu/h)			Power Usage Range (W)	Current (208/230V)
	Unit A	Unit B	Unit C		
6 + 9 + 9	6000	9000	9000	TBD	
	7100	10650	10650		
6 + 9 + 12	5778	8667	11556		
	6311	9467	12622		
6 + 9 + 15	5680	8520	14200		
	5720	8580	14300		
6 + 9 + 18	5164	7745	15491		
	5200	7800	15600		
6 + 12 + 12	5680	11360	11360		
	5720	11440	11440		
6 + 12 + 15	5164	10327	12909		
	5200	10400	13000		
6 + 12 + 18	4733	9467	14200		
	4767	9533	14300		
6 + 15 + 15	4733	11833	11833		
	4767	11917	11917		
9 + 9 + 9	8667	8667	8667		
	9467	9467	9467		
9 + 9 + 12	8520	8520	11360		
	8580	8580	11440		
9 + 9 + 15	7745	7745	12909		
	7800	7800	13000		
9 + 9 + 18	7100	7100	14200		
	7150	7150	14300		
9 + 12 + 12	7745	10327	10327		
	7800	10400	10400		
9 + 12 + 15	7100	9467	11833		
	7150	9533	11917		
12 + 12 + 12	9467	9467	9467		
	9533	9533	9533		

Specifications are subject to change without notice.

© 2015 Mitsubishi Electric US, Inc.

DIMENSIONS: MXZ-3C30NAHZ

Unit: inch (mm)

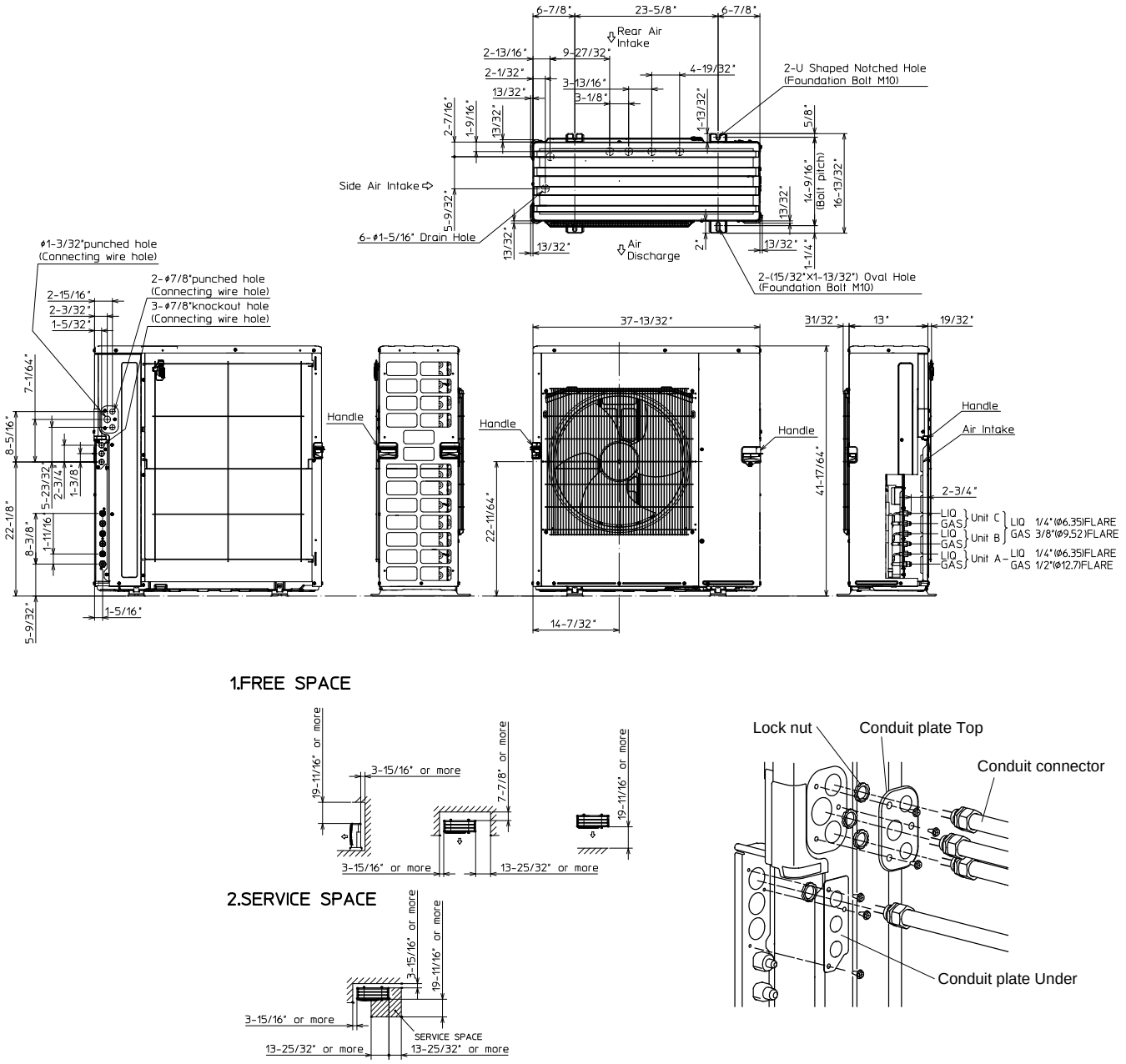

1340 Satellite Boulevard
Suwanee, GA 30024
Toll Free: 800-433-4822
www.mehvac.com

FORM# MXZ-3C30NAHZ for Multiple Indoor Unit Styles - 201505

Specifications are subject to change without notice.
© 2015 Mitsubishi Electric US, Inc.

ERV

June 29, 2015

Lossnay — Model: LGH-F300RX5-E

MITSUBISHI ELECTRIC

Job Name:

Schedule Reference: | Date:

ENERGY RECOVERY VENTILATOR

GENERAL FEATURES

- Lossnay® cross-flow energy recovery core
- Minimal cross contamination (<1% overall) between entering and leaving air streams
- Stand-alone control
- M-NET
- External input bypass damper control
- Stand alone or interlocks with all Mitsubishi product

SPECIFICATIONS

Capacity. . . . . 300 CFM / 8.5 m^3/min

Power
Power Source. . . . . .208 - 230V, 1-Phase, 60 Hz
Power Consumption . . . . . 0.067 - 0.300 kW
Current . . . . . .0.32 - 1.35 A
Starting Current . . . . . .2.5 A
Minimum Circuit Ampacity (MCA). . . . . 1.8 A
Maximum Overcurrent Protection (MOCP). . . . . .15 A

Controllers
PZ-60DR Lossnay® Controller: Controls 1-15 Lossnay® units, ON/OFF, Fan Speed, and Vent Mode

Operation Mode
- Heat Recovery
- Bypass
- Auto

Air Volume
(fan speed: extra low - low - high - extra high)
@ 208V . . . . . 91 - 203 - 260 - 300 CFM
@ 230V . . . . . 112 - 235 - 300 - 300 CFM

Temperature recovery efficiency
(fan speed: extra low - low - high - extra high)
@ 208V . . . . . 81- 71 - 67.5 - 65.5%
@ 230V . . . . . 79 - 69 - 65.5 - 65.5%

Enthalphy recovery efficiency
(fan speed: extra low - low - high - extra high)
Heating
@ 208V. . . . . .79 - 68 - 65 - 63 %
@ 230V. . . . . 77 - 66 - 63 - 63 %

Cooling
@ 208V. . . . . 63 - 55 - 52 - 50%
@ 230V. . . . . 61 - 53 - 50 - 50%

External static pressure (In. W.G.)
(fan speed: extra low - low - high - extra high)
@ 208V . . . . . 0.06 - 0.28 - 0.46 - 0.60
@ 230V . . . . . 0.08 - 0.33 - 0.54 - 0.78

External Finish . . . . . .Galvanized steel sheet

Dimensions
inches. . . . . 12-3/8 H x 40 W x 34-15/16 D
mm . . . . . 315 H x 1016 W x 888 D

Net Weight. . . . . 73 lb / 33 kg

Energy Transfer. . .. . .Lossnay® core

Heat Exchange System . . . . . Air-to-air total heat (sensible heat + latent heat) exchange, no moving parts

Heat Exchange Material . . . . . Partition, spacing plate-cellulose fiber membrane

Blower . . . . . 9.625 in. dia. centrigugal fan

Motor . . Totally enclosed capacitor permanent split-phase 0.52 HP induction motor, 4 poles, 2 units

Filter . . . . . Washable fiber (2)

Entering Air Temperature Operation Range
14° F to 104° F (-10° C to 40° C), RH 80% or less

Sound Pressure Level
(fan speed: extra low - low - high - extra high)
@ 208V . . . . . .18 - 25.5 - 30.5 - 34 dB (A)
@ 230V . . . . . 18 - 27.5 - 33 - 37 dB (A)

Notes:

Specifications are subject to change without notice.
© 2013 Mitsubishi Electric US, Inc.

Model: LGH-F300RX5-E – DIMENSIONS

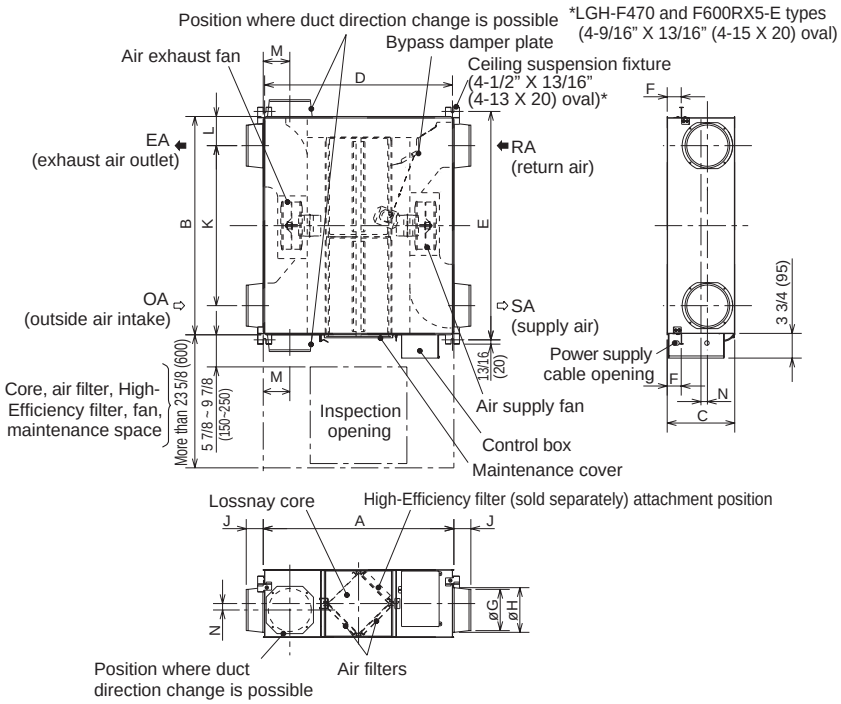

Accessory parts

- Mounting screws x16
- Duct connecting flanges x4
  (double flanges at SA and EA sides)
- P-Series - Lossnay connection cable
  (gray: two wires) x1

Unit: Inch (mm)

Model	Dimensions			Ceiling suspension fixture pitch			Nominal diameter	Duct connecting flange			Duct pitch				Weight
	A	B	C	D	E	F		G	H	J	K	L	M	N	
LGH-F300RX5-E	34 15/16 (888)	40 (1016)	12 3/8 (315)	34 1/2 (875)	41 7/8 (1063)	2 9/16 (65)	7 7/8 (200)	7 9/16 (192)	8 3/16 (208)	3 1/8 (79)	29 3/8 (745)	5 5/16 (135.5)	4 7/8 (124)	1 3/16 (30)	73 lbs (33 kg)
LGH-F470RX5-E	45 1/16 (1144)	39 1/2 (1004)	15 3/4 (399)	39 3/4 (1010)	40 13/16 (1036)	15 5/16 (389)	9 7/8 (250)	9 1/2 (242)	10 3/16 (258)	3 1/8 (79)	27 3/16 (690)	6 3/16 (157)	6 1/2 (165)	–	119 lbs (54 kg)
LGH-F600RX5-E	45 1/16 (1144)	48 1/2 (1231)	15 3/4 (399)	39 3/4 (1010)	49 3/4 (1263)	15 5/16 (389)	9 7/8 (250)	9 1/2 (242)	10 3/16 (258)	3 1/8 (79)	36 1/8 (917)	6 3/16 (157)	6 1/2 (165)	–	132 lbs (60 kg)

AHRI CERTIFIED® www.ahridirectory.org
Air-to-Air ERV
AHRI Standard 1060
Energy Recovery COMPONENT is certified. Actual performance in packaged equipment may vary.

ETL LISTED US
Intertek

MITSUBISHI ELECTRIC
COOLING & HEATING
Live Better

1340 Satellite Boulevard
Suwanee, GA 30024
Tele: 678-376-2900 • Fax: 800-889-9904
Toll Free: 800-433-4822
www.mehvac.com

FORM# LGH-F300RX5 - 201310
Specifications are subject to change without notice.
© 2013 Mitsubishi Electric US, Inc.

Fans

June 29, 2015

Model: BSQ-120-15

Belt Drive Centrifugal Inline Fan

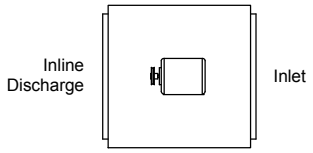

PLAN VIEW

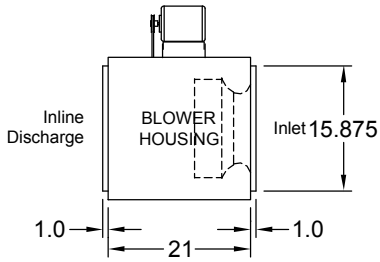

ELEVATION VIEW

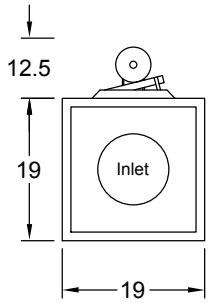

END VIEW

Dimensional	
Quantity	1
Weight w/o Acc's (lb)	91
Weight w/ Acc's (lb)	95
Max T Motor Frame Size	145

Performance	
Requested Volume (CFM)	1,800
Actual Volume (CFM)	1,800
External SP (in. wg)	1.87
Total SP (in. wg)	1.87
Fan RPM	2270
Operating Power (hp)	1.25
Elevation (ft)	282
Airstream Temp.(F)	70
Air Density (ft3)	0.074
Drive Loss (%)	5.6
Tip Speed (ft/min)	7,800
Static Eff. (%)	45

Motor	
Motor Mounted	Yes
Size (hp)	1 1/2
V/C/P	208/60/3
Enclosure	ODP
Motor RPM	1725
Windings	1
NEC FLA* (Amps)	6.6

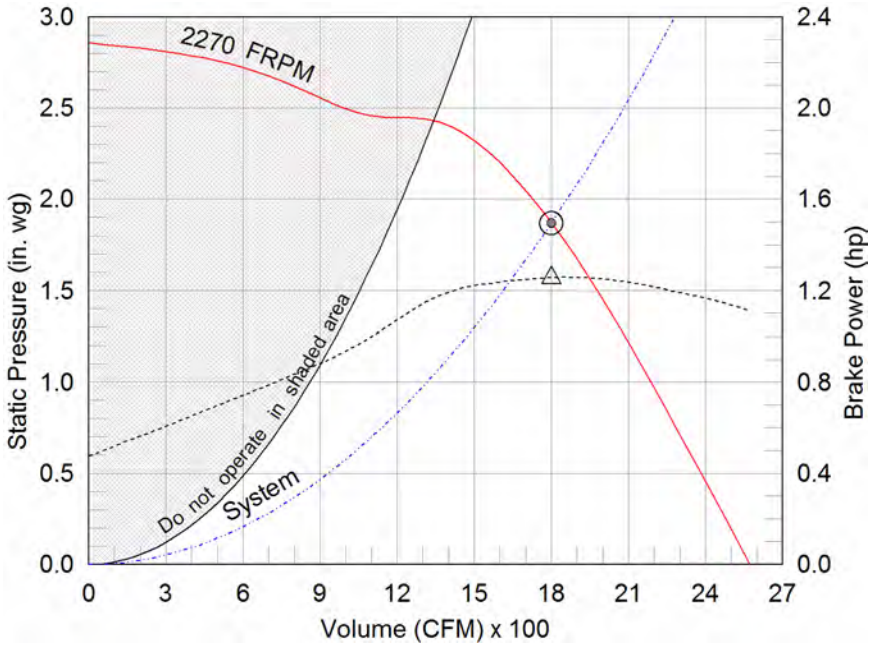

Operating Bhp point
Operating point at Total SP
Operating point at External SP
Fan curve
System curve
Brake horsepower curve

Sound Power by Octave Band

Sound Data	62.5	125	250	500	1000	2000	4000	8000	LwA	dBA	Sones
Inlet	88	81	79	82	78	73	69	65	83	72	19.9
Radiated	89	83	73	76	73	67	63	61	78	66	15.5

Notes:

All dimensions shown are in units of in.
*FLA - based on tables 150 or 148 of National Electrical Code 2002. Actual motor FLA may vary, for sizing thermal overload, consult factory.
LwA - A weighted sound power level, based on ANSI S1.4
dBA - A weighted sound pressure level, based on 11.5 dB attenuation per Octave band at 5 ft - dBA levels are not licensed by AMCA International
Sones - calculated using AMCA 301 at 5 ft

Model: BSQ-120-15

Belt Drive Centrifugal Inline Fan

Standard Construction Features:

- Galvanized steel housing - Backward inclined aluminum wheel - Two bolted access panels - Integral duct connection flanges - Ball bearing motors - Adjustable motor pulley - Adjustable motor plate - Fan shaft mounted in ball bearing pillow blocks - Static free belts - Corrosion resistant fasteners

Selected Options & Accessories:

Switch, NEMA-1, Toggle, Junction Box Mounted & Wired
Aluminum Housing
Bearings with Grease Fittings, L10 life of 100,000 hrs (L50 avg. life 500,000 hrs)
Unit Warranty: 1 Yr (Standard)

AMCA

AMCA Licensed for Sound and Air Performance. Power rating (BHP/kW) includes transmission losses.

Greenheck Fan Corporation certifies that the model shown herein is licensed to bear the AMCA Seal. The ratings shown are based on tests and procedures performed in accordance with AMCA Publication 211 and AMCA Publication 311 and comply with the requirements of the AMCA Certified Ratings Program. Performance certified is for installation type B: Free inlet, Ducted outlet. Power rating (BHP/kW) includes transmission losses. Performance ratings do not include the effects of appurtenances (accessories). The inlet sound ratings shown are loudness values in fan sones at 5 ft. (1.5 m) in a hemispherical free field calculated per AMCA Standard 301. Values shown are for installation type B: free inlet hemispherical sone levels. dBA levels are not licensed by AMCA International. The AMCA Certified Ratings Seal applies to inlet sone ratings only. Radiated (casing) sound data is the sound generated through the fan housing when the fan is ducted on both the inlet and outlet.

Model: SQ-85-VG

Direct Drive Centrifugal Inline Fan

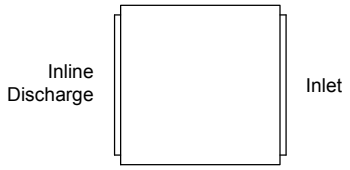

PLAN VIEW

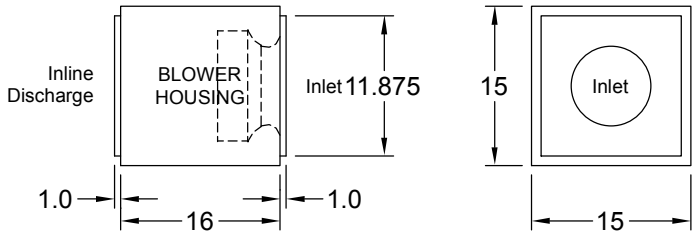

ELEVATION VIEW END VIEW

Dimensional	
Quantity	1
Weight w/o Acc's (lb)	39
Weight w/ Acc's (lb)	41

Performance	
Requested Volume (CFM)	300
Actual Volume (CFM)	300
External SP (in. wg)	0.37
Total SP (in. wg)	0.37
Fan RPM	1468
Operating Power (hp)	0.05
Elevation (ft)	282
Airstream Temp.(F)	70
Air Density (ft3)	0.074
Tip Speed (ft/min)	4,178
Static Eff. (%)	37

Motor	
Motor Mounted	Yes
Size (hp)	1/6
V/C/P	208/60/1
Enclosure	TENV
Motor RPM	1725
Windings	1
NEC FLA* (Amps)	2.4
FLA (Amps)	1.6

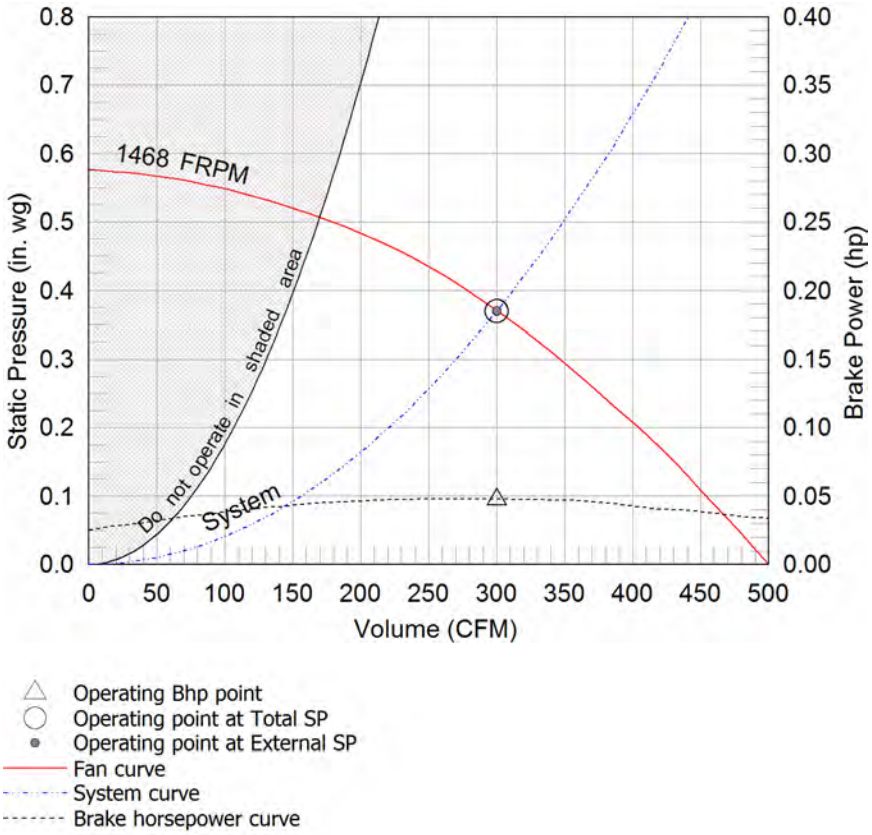

Sound Power by Octave Band

Sound Data	62.5	125	250	500	1000	2000	4000	8000	LwA	dBA	Sones
Inlet	66	72	69	60	57	54	49	41	65	53	6.7
Radiated	67	74	63	54	52	48	43	37	62	50	5.8

Notes:

All dimensions shown are in units of in.
*FLA - based on tables 150 or 148 of National Electrical Code 2002. Actual motor FLA may vary, for sizing thermal overload, consult factory.
LwA - A weighted sound power level, based on ANSI S1.4
dBA - A weighted sound pressure level, based on 11.5 dB attenuation per Octave band at 5 ft - dBA levels are not licensed by AMCA International
Sones - calculated using AMCA 301 at 5 ft

Model: SQ-85-VG

Direct Drive Centrifugal Inline Fan

Standard Construction Features:

- Galvanized steel housing - Backward inclined aluminum wheel - Two bolted access panels - Integral duct connection flanges - Ball bearing motors (sizes 100-160 and all vari-green motors), sleeve bearing motors (sizes 60-95) - Corrosion resistant fasteners

Selected Options & Accessories:

Motor - Vari-Green EC motor 0-10 VDC Input Signal
Control - Vari-Green Dial on Exterior of Fan Housing, Mounted and Wired
Switch, NEMA-1, Toggle, Junction Box Mounted & Wired
Aluminum Housing
Unit Warranty: 1 Yr (Standard)

AMCA

AMCA Licensed for Sound and Air Performance. Power rating (BHP/kW) does not include transmission losses.

Greenheck Fan Corporation certifies that the model shown herein is licensed to bear the AMCA Seal. The ratings shown are based on tests and procedures performed in accordance with AMCA Publication 211 and AMCA Publication 311 and comply with the requirements of the AMCA Certified Ratings Program. Performance certified is for installation type B: Free inlet, Ducted outlet. Power rating (BHP/kW) does not include transmission losses. Performance ratings do not include the effects of appurtenances (accessories). The inlet sound ratings shown are loudness values in fan sones at 5 ft. (1.5 m) in a hemispherical free field calculated per AMCA Standard 301. Values shown are for installation type B: free inlet hemispherical sone levels. dBA levels are not licensed by AMCA International. The AMCA Certified Ratings Seal applies to inlet sone ratings only. Radiated (casing) sound data is the sound generated through the fan housing when the fan is ducted on both the inlet and outlet.

Model: CUBE-131-5

Belt Drive Upblast Centrifugal Roof Exhaust Fan

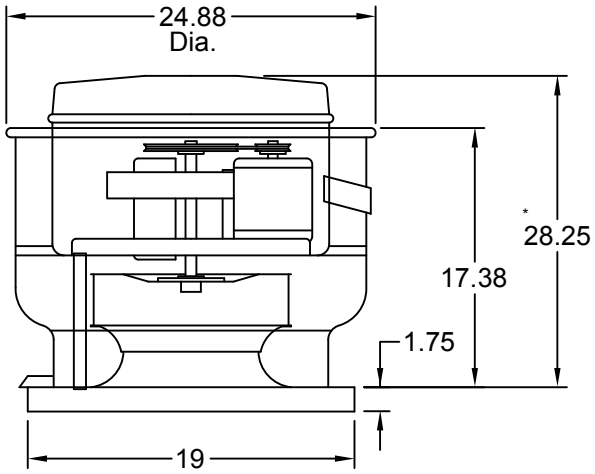

Reference assembly view drawings for actual dimensions with mounted accessories

*Overall height may be greater depending on motor

Dimensional	
Quantity	1
Weight w/o Acc's (lb)	63
Weight w/ Acc's (lb)	65
Max T Motor Frame Size	56
Roof Opening (in.)	14.5 x 14.5

Performance	
Requested Volume (CFM)	1,800
Actual Volume (CFM)	1,800
External SP (in. wg)	0.71
Total SP (in. wg)	0.71
Fan RPM	1595
Operating Power (hp)	0.5
Elevation (ft)	282
Airstream Temp.(F)	70
Air Density (ft3)	0.074
Drive Loss (%)	8.4
Tip Speed (ft/min)	5,454
Static Eff. (%)	43

Motor	
Motor Mounted	Yes
Size (hp)	1/2
V/C/P	208/60/1
Enclosure	ODP
Motor RPM	1725
Windings	1
NEC FLA* (Amps)	5.4

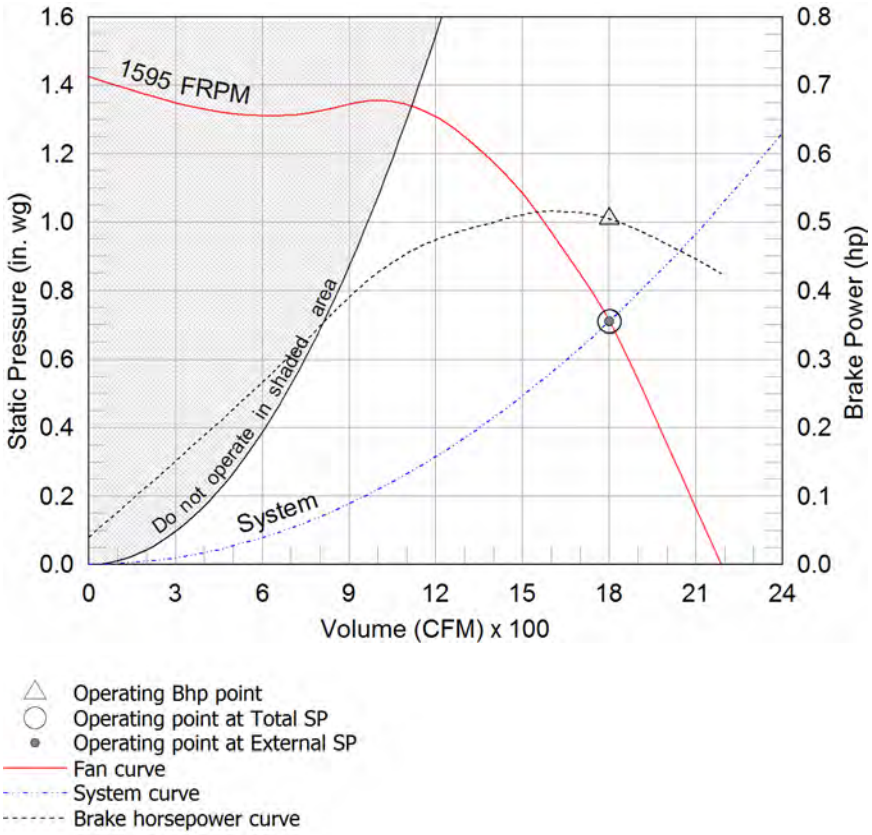

Sound Power by Octave Band

Sound Data	62.5	125	250	500	1000	2000	4000	8000	LwA	dBA	Sones
Inlet	78	78	84	75	67	66	63	60	78	67	15.5

Notes:

All dimensions shown are in units of in.
*FLA - based on tables 150 or 148 of National Electrical Code 2002. Actual motor FLA may vary, for sizing thermal overload, consult factory.
LwA - A weighted sound power level, based on ANSI S1.4
dBA - A weighted sound pressure level, based on 11.5 dB attenuation per Octave band at 5 ft - dBA levels are not licensed by AMCA International
Sones - calculated using AMCA 301 at 5 ft

Model: CUBE-131-5

Belt Drive Upblast Centrifugal Roof Exhaust Fan

Standard Construction Features:

- Aluminum housing - Backward inclined aluminum wheel - Curb cap with prepunched mounting holes - Motor and drives isolated on shock mounts - Drain trough - Ball bearing motors - Adjustable motor pulley - Adjustable motor plate - Fan shaft mounted in ball bearing pillow blocks - Bearings meet or exceed temperature rating of fan - Static resistant belts - Corrosion resistant fasteners - Internal lifting lugs

Selected Options & Accessories:

Switch, NEMA-1, Toggle, Junction Box Mounted & Wired
Unit Warranty: 1 Yr (Standard)

AMCA

AMCA Licensed for Sound and Air Performance. Power rating (BHP/kW) includes transmission losses.

Greenheck Fan Corporation certifies that the model shown herein is licensed to bear the AMCA Seal. The ratings shown are based on tests and procedures performed in accordance with AMCA Publication 211 and AMCA Publication 311 and comply with the requirements of the AMCA Certified Ratings Program. Performance certified is for installation type A: Free inlet, Free outlet. Power rating (BHP/kW) includes transmission losses. Performance ratings do not include the effects of appurtenances (accessories). The sound ratings shown are loudness values in fan sones at 5 ft. (1.5 m) in a hemispherical free field calculated per AMCA Standard 301. Values shown are for installation type A: free inlet hemispherical sone levels. dBA levels are not licensed by AMCA International. The AMCA Certified Ratings Seal applies to sone ratings only.

Cabinet Unit Heater

June 29, 2015

PRODUCT SUBMITTAL SHEET

QMARK
A Marley Engineered Products Brand

Capacities
500, 562, 750, 900, 1000, 1125, 1500, 1800 or 2000 Watts 120, 208, 240 or 277V @ 1Ø Only Thermostat Range: 40° - 85° F Air Movement: 65 CFM

CWH1000 SERIES
FAN-FORCED WALL HEATERS

Job Name: Casey Community Center

Location: Gaithersburg, MD

Architect: NIKA

Engineer: NIKA

Contractor:

Submitted By:

Date:

Submitted By:	Date:
Approved By:	**Date:**

Item	QTY	Catalog Number	Tag	Watts	Volts	PH	AMPS	Weight

ACCESSORIES

Item	QTY	Part Number	Tag

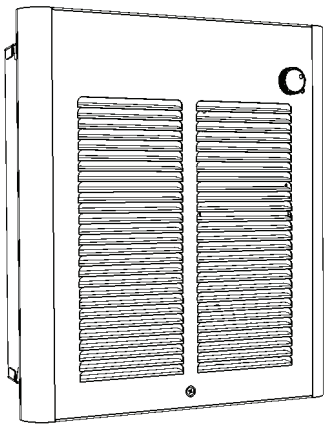

Marley Engineered Products

470 Beauty Spot Road East
Bennettsville, South Carolina 29512
www.marleymep.com

Catalog Number	Volts	Amps	Watts	BTU/HR	Wire Size
CWH1101DSF	120	8.4/4.2	1000/500	3413/1706	14AWG
CWH1151DSF	120	12.5/6.3	1500/750	5120/2560	12AWG
CWH1201DSF	120	15.0/7.5	1800/900	6143/3072	12AWG
CWH1202DSF	240	8.4/4.2	2000/1000	6826/3413	14AWG
	208	7.3/3.6	1500/750	5120/2560	14AWG
CWH1207DSF	277	7.3/3.6	2000/1000	6826/3413	14AWG
	240	6.3/3.2	1500/750	5120/2560	14AWG
CWH1157DSF	277	5.5/2.75	1500/750	5120/2560	14AWG
	240	4.7/2.4	1125/562	3840/1920	14AWG
CWH1208DSF	208	9.6/4.8	2000/1000	6826/3413	14AWG

Accessories	
CWHSM	Surface Mounting Frame (Accessory) Order Separately 12-1/2" (318mm)H X 10-3/8" (264mm)W X 4" (102mm)
CWHS1	1" (25mm) Recess Mounting Frame (Accessory) Order Separately
CWHS2	2" (50mm) Recess Mounting Frame (Accessory) Order Separately
SRAFCTP	Tamper-resistant front cover

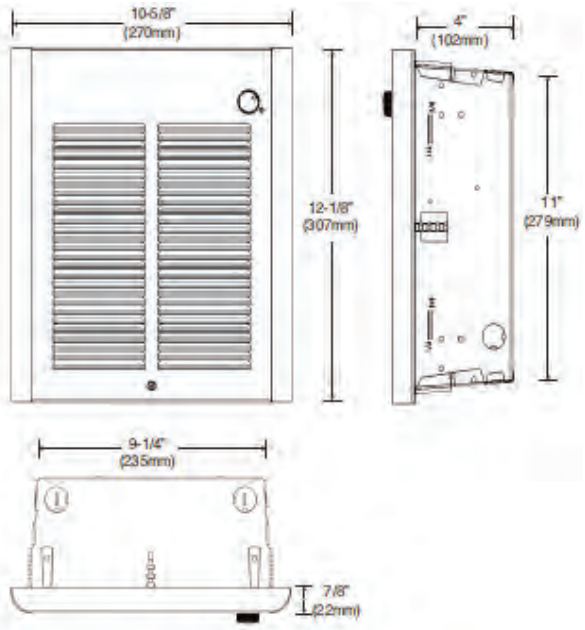

ARCHITECT'S AND ENGINEER'S SPECIFICATIONS*

The heating equipment shall include an electric automatic fan forced air heater suitable for small area heating, as manufactured by QMark®, a Marley Engineered Products® Brand, Bennettsville, SC. The heater shall be designed for wall mounting, recess or surface. Heaters shall be cETLus listed.

BACK BOX: The back box shall be designed as a recessed rough-in box in either masonry or frame installations and is also used when surface mounting frames are used in surface mounting installations. The back box shall be heavy gauge galvanized steel and shall contain knockouts through which power leads enter.

INNER FRAME ASSEMBLY: The heater assembly, which fits into the back box, shall consist of a heavy gauge steel fan panel to which all of the operational parts of the heater are mounted. The inner frame assembly shall be completely pre-wired.

HEATING ELEMENT: The heating element shall be of the non-glowing design consisting of an 80/20 nickel-chromium resistance wire enclosed in a steel sheath to which plate fins are copper brazed. The element shall cover the entire air discharge area to ensure uniform heating of all discharged air. It shall be warrantied for 5 years.

ON/OFF SWITCH: A double-pole, single throw on/off switch shall be mounted on the back box for positive disconnect of power supply. It will be completely concealed behind the front cover.

MOTOR AND CONTROLS: The fan motor shall be impedance protected, permanently lubricated. Fan control shall be of the bi-metallic, snap-action type and shall activate fan after heating element reaches operating temperature, and continue to operate the fan after the thermostat is satisfied and until all heated air has been discharged. The thermostat shall be single-pole type on all models. Thermal cutout shall be self-hold (manual-reset) type designed to shut off heat in the event of overheating. The fan shall be four-bladed aluminum. A back-up (End of Life) thermal fuse shall be provided for additional safety.

SURFACE MOUNTING FRAME: The surface mounting frame shall be of heavy gauge steel designed to mount around the back box for a finished surface installation. Slot knock outs shall be provided for power supply conduit.

FRONT COVER: The louvered front cover shall be of heavy gauge steel with a powder paint finish. A plug button will be provided to replace the thermostat knob and render the unit tamper-resistant.

FINISH: All sheet metal parts, except the galvanized steel back box, shall be phosphatized, then completely painted by a powder paint process.

**In the interest of continual improvements in product and performance, Marley Engineered Products reserves the right to change specifications without notice.*

Duct Heater

June 29, 2015

Duct Heater How To Size

To calculate the amount of heat required in Kilowatts (kW), knowing the volume of airflow in cubic feet per minute (CFM) and the temperature rise is in degrees Fahrenheit (ΔT) that is required for the application, the required kilowatt (kW) rating of the heater can be determined from the formula:

kW = (CFM x ΔT)/3160

For most comfort heating applications, the duct heater will be specified to provide heat in steps. These steps of heat will be specified by either the ΔT between the steps or the kW rating between steps. The table below shows the recommendations for both the ΔT difference and the kW difference between steps.

Standard Voltages

Common Nominal Voltages	110 115 120	208		220	230 240		277	318 332 347	380		416		440 460 480		550 575 600	
MEP Standard	120 1 Ph	208 1 Ph	208 3 Ph	220 1 Ph	208 3 Ph	208 3 Ph	277 1 Ph	347 1 Ph	380 1 Ph	380 3 Ph	416 1 Ph	416 3 Ph	480 1 Ph	480 3 Ph	600 1 Ph	600 3 Ph

Minimum air velocity required for the duct heater is determined from the charts below.

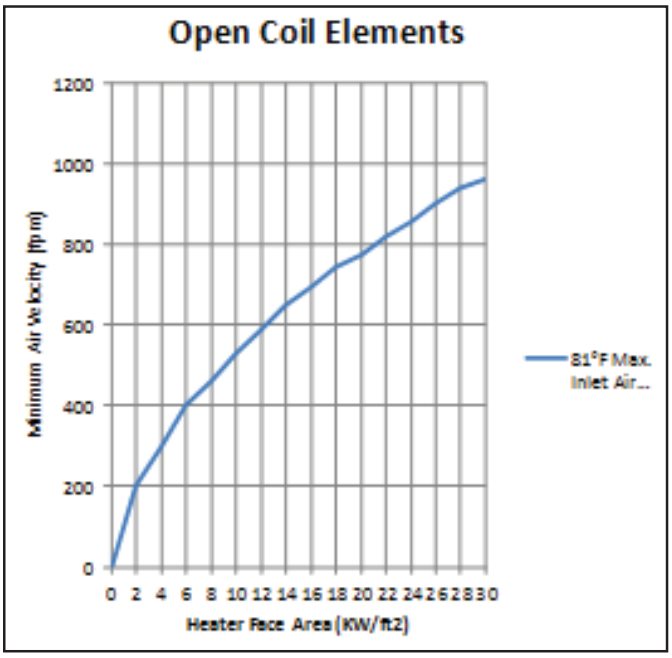

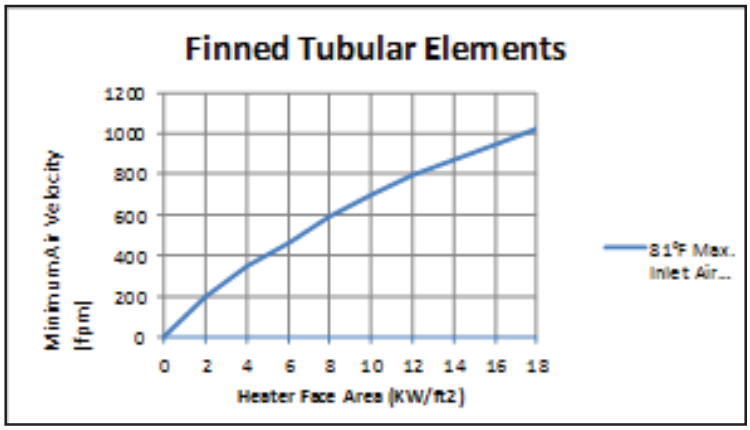

Maximum allowed watt density if 22.5 kW/Ft2

Maximum allowed watt density if 13.0 kW/Ft2

An example of calculating the Minimum Air Velocity needed: A 25 kW open coil duct heater is to be installed in a duct that is 12 inches high by 24 inches wide.
Face Area = ((H"- 2.5")(W" – 0.5"))/144 in2/ft2 = ((12" – 2.5")(24" – 0.5"))/144 in2/ft2 = 1.53 ft2
kW/ft2 = kW of heater/Face Area = 25/1.53 = 16.3 kW/ft2
From the Open Coil Elements chart (see above), a Heater Face Area of 16.3 kW/ft2 shows a Minimum Air Velocity for 81°F maximum inlet air temperature air to be 700 fpm.

Calculating Pressure Drop Through A Heater

The chart shown below is the approximate pressure drop through a heater based on the velocity of the entering air.

PRESSURE DROP THROUGH HEATER (INCHES WATER)*

Open coil heaters cause a smaller static pressure drop than do tubular heaters. This may permit the use of a smaller blower with resultant energy savings. A typical tubular heater with 600 feet/minute face velocity has .60 inches of water pressure drop, while the same size open coil heater with the same face velocity has only .03 inches of water pressure drop.

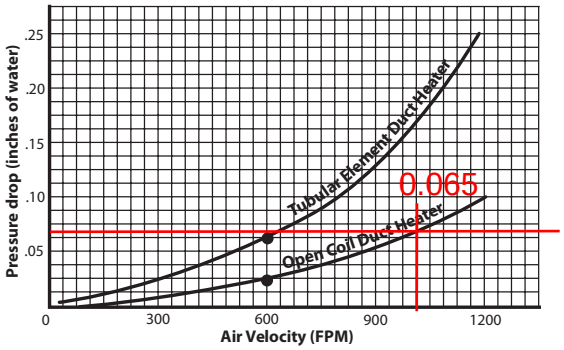

* This is an estimate only and will vary with the specific construction of each heater. Actual pressure drops can only be found by performing pressure drop measurements on actual heater.

KILOWATTS PER SQUARE FOOT

Since tubular elements surface temperature lag behind the resistance wire temperature due to mass and insulation, and in order not to exceed the maximum temperatures allowed by UL, a tubular duct heater is not permitted to have the same concentration of wattage as an open coil heater. Open coil duct heaters have listing of 22.5 kW per square foot. For tubular duct heaters, the limitation is usually about 13kW per square foot.

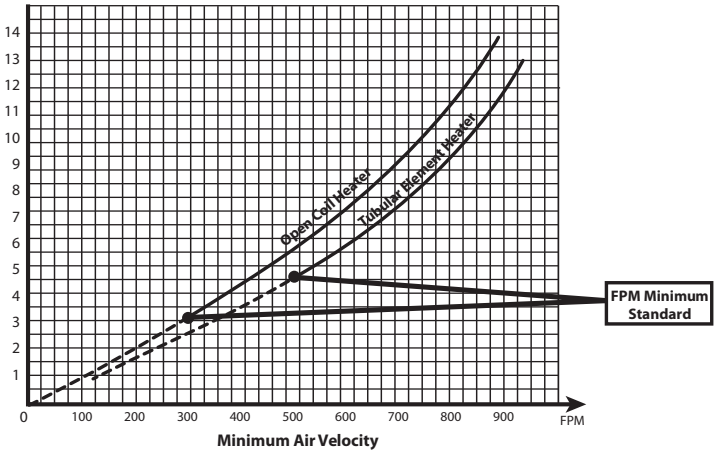

Calculating Line Currents

To determine the line current of a heater, use the formulas shown below.

Single Phase Units

Line Current (I_L) in amperes = Wattage/Voltage

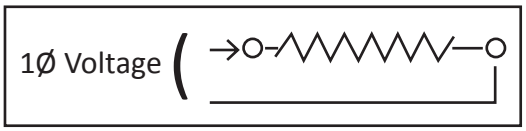

Three Phase Units

Line Current (I_L) in amperes = Wattage/(Voltage x 1.73)

Note: This is a calculation of the current flow in each of the three lines, regardless of whether the elements are connected in a wye or a delta.

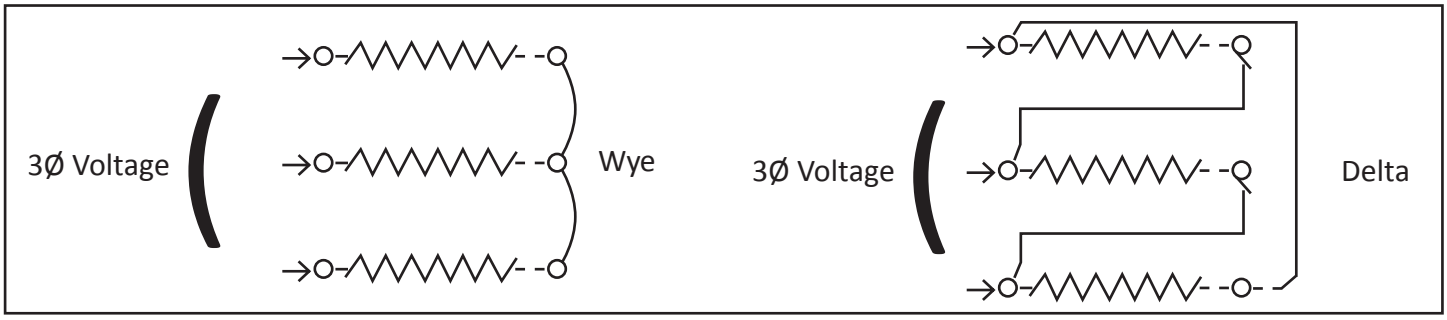

Supply Wire & Terminal Sizing

UL requires the line terminals in duct heaters be sized to accept conductors which are rated to carry at least 125% of heater line current. Heaters are provided with properly sized terminals at no extra charge. Field supply wires must be sized to carry at least 125% of heater line current except when the heater is for space heating, is over 50 kW, and not more than 3 wires in the conduit. Under those conditions the conductors may be sized at 100% of the heater line current. Supply conductors must have insulation rated at 75°C (167°F) or higher.

Motorized Damper

June 29, 2015

GREENHECK

WD-200 Series

Motorized Backdraft Damper

Application

The WD-200 series are electrically motorized backdraft dampers that open when energized and spring return close when re-energized. The WD-200 series are for horizontal or vertical mounting. Primary application is to prevent undesirable reverse airflow when installed with roof or sidewall supply (intake) fans. Electric motor pack is shipped separately and requires installation in the field.

Ratings

Pressure: 1.0 in. wg (0.25 kPa) - differential pressure
Velocity: 2500 fpm (13 m/s)
Temperature: 180°F (82°C)

Construction	Standard	Optional
Frame Material	Galvanized steel	-
Frame Thickness	18 ga. (1.3mm)	-
Frame Type	No flange (WD-200)	-
	Flange on motor side (WD-210)	-
	Flange opposite motor (WD-220)	-
Blade Material	Roll formed aluminum	-
Blade Thickness	0.032 in. (0.8mm) - 0.04 in. (1mm)	-
Blade Seals	Vinyl	-
Axle	3/16 in. (4.8mm) dia. zinc plated steel pin on blade ends	304SS
Axle Bearings	Synthetic	304SS
Linkage Material	.064 in. (1.6mm) aluminum tie bar	-
Operator	MP-200 series motor pack(s)	-
Paint Finishes	None	Baked Enamel, Epoxy, Hi Pro Polyester, Industrial Epoxy

Size Limitations

W x H	Minimum Size	Maximum Size	
		Single Panel	Multiple Panels
WD-210 & WD-220			
Inches	6 x 6	31 x 74	148 x 148
mm	152 x 152	787 x 1880	3759 x 3759
WD-200			
Inches	6 x 6	31 x 74	150 x 148
mm	152 x 152	787 x 1880	3810 x 3759

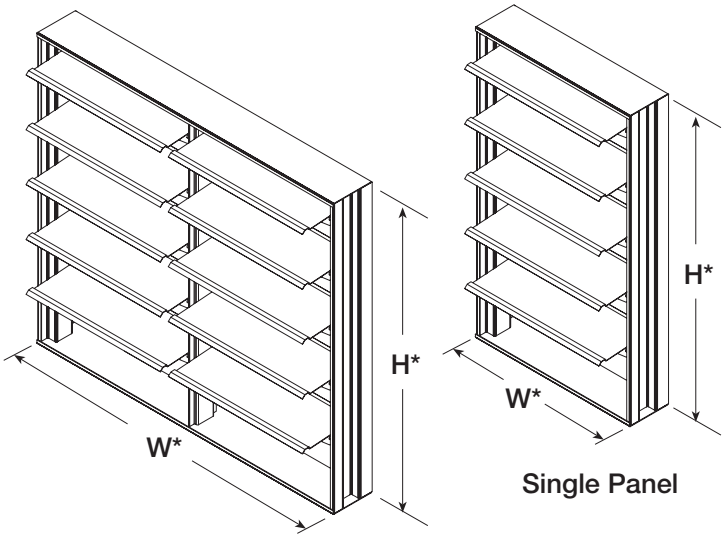

Double Panel

Single Panel

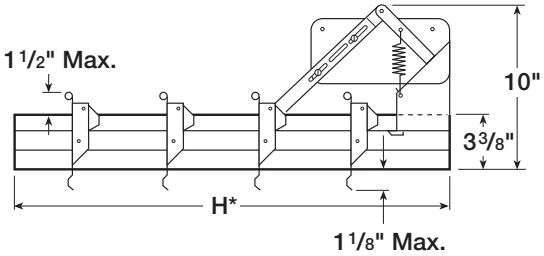

Model WD-200
No Flange

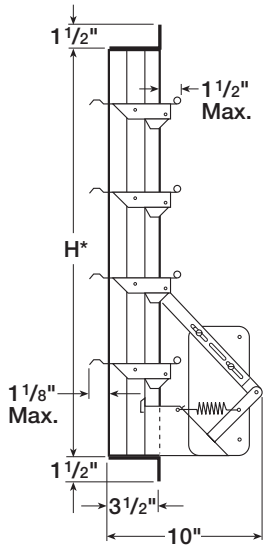

Model WD-210
Flange on Motor Side

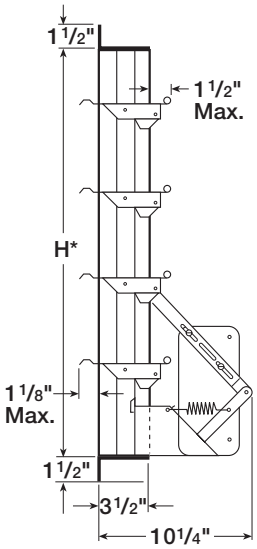

Model WD-220
Flange Opposite Motor

Options:

- End Switch Kit (part no. 851038)

Installation instructions available at www.greenheck.com.

Pressure Drop

Performance data results from testing a 36 in. x 36 in. (914mm x 914mm) damper in accordance with AMCA Standard 500-D using Figure 5.5 (unducted). All data has been corrected to represent standard air at 0.075 lb/ft³ (1.201 kg/m³).

Operational Data		ΔP in. wg (Pa)	Velocity fpm (m/s)
Blades fully open	Non-ducted	0.017 (4)	300 (1.5)
Blades fully open	Non-ducted	0.62 (154)	2000 (10.2)

0.549

* Please note that the pressure differentials listed above are for the beginning and ending points of the graph at the right. Both blade positions above are listed as fully open (and not 'Start Open' and 'Fully Open') because this damper is always motorized and thus the testing is performed with the blades actuated to the open position.

Pressure Drop

36 in. x 36 in. (914mm x 914mm) Damper

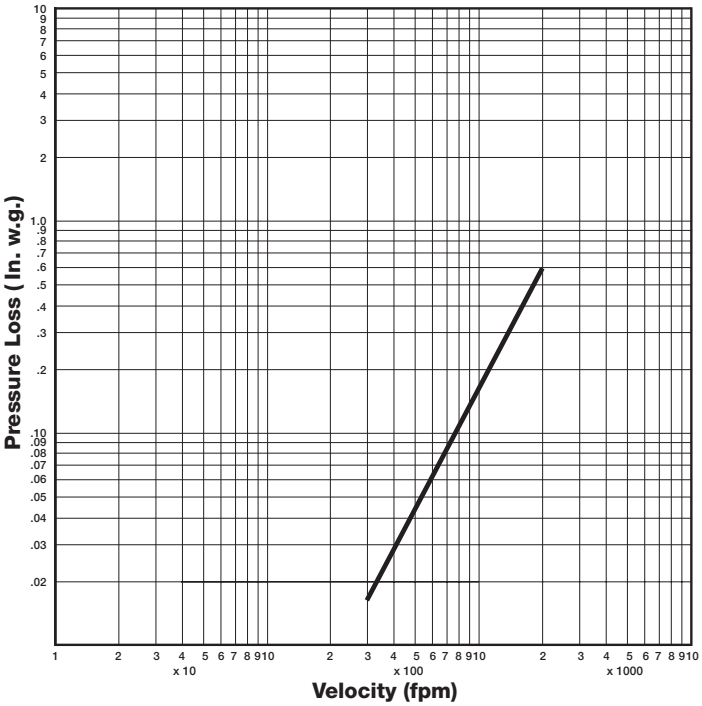

Leakage

Leakage testing was conducted in accordance with AMCA Standard 500-D and is expressed as CFM per sq. ft. of damper face area. All data has been corrected to represent standard air at 0.075 lb/ft³ (1.201 kg/m³).

Leakage

36 in. x 36 in. (914mm x 914mm) Damper

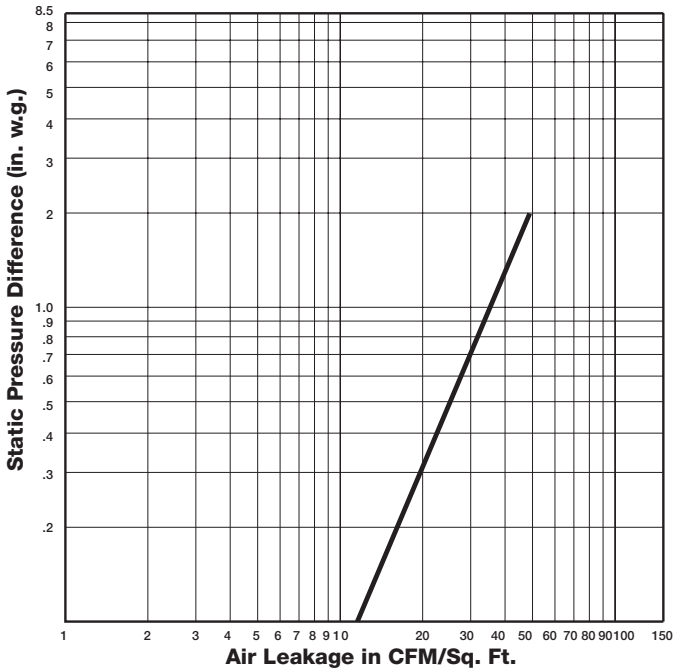

Series MP-210 and MP-220A is a standard feature of all Wd-200 dampers. These motor packs are field installed to convert the WD-200 series backdraft damper to motorized operation. Airflow direction can be vertical or horizontal. These versatile motor packs feature power opening with spring return. The springs also provide damper closure in the event of electrical failure.

The MP-210 and MP-220A motor packs are available in voltages of 24, 120, 208, 220, 380, and 440. The 575/600 volts may be used for the MP-200 series by way of a transformer (Greenheck part no. 380711) and the appropriate 115 volt motor pack (MP-210 or MP-220A). All MP-200 series motor packs are UL listed. Specify voltage when ordering.

There are two motor packs available on the WD-200 series damper to accommodate for larger torque requirements. To determine the type and number of motor packs required on WD-200 damper, refer to the table on page 5. To determine the type and number of motor packs required per WD-210 or Wd-220 damper, refer to the table on page 7. Oversized applications may require several dampers connected together for one opening.

MP-200 series motor packs are supplied with mounting hardware, assembly instructions and actuator arms for either single, double, or triple panel installation.

MP-210/220A Motor packs	24V (50/60 Hz)	110V-120V (50/60Hz)	208V - 240V (50/60Hz)	460V (60Hz)
Stall Amps	.66	.15	.07	.041
Spec ID#	G24	G110-240	G110-240	G460

Motor Pack Dimensional Data

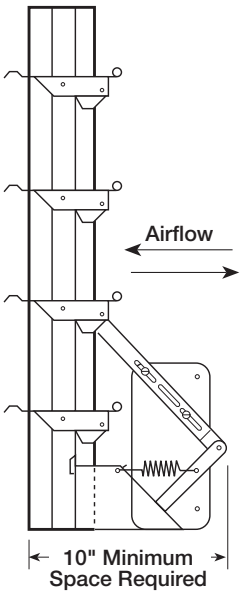

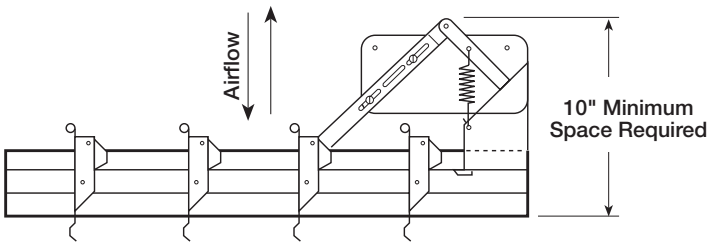

WD-200 Series backdraft damper with mounted motorpack

WD-200 series dampers come standard with a motor pack. The diagrams above illustrate the required clearance needed for proper operation of a mounted motor pack.

WD-200 Selection

Multiple section dampers shown below are supplied as equal size sections. Any damper that has multiple sections, both vertically and horizontally, will require field assembly and will require additional reinforcement (not supplied by Greenheck) to support the assembly. These larger dampers must have the additional reinforcement to give them structural stability.

The width dimension is always parallel to the length of the blades.

Note: The type and number of motor packs required can be found on page 5.

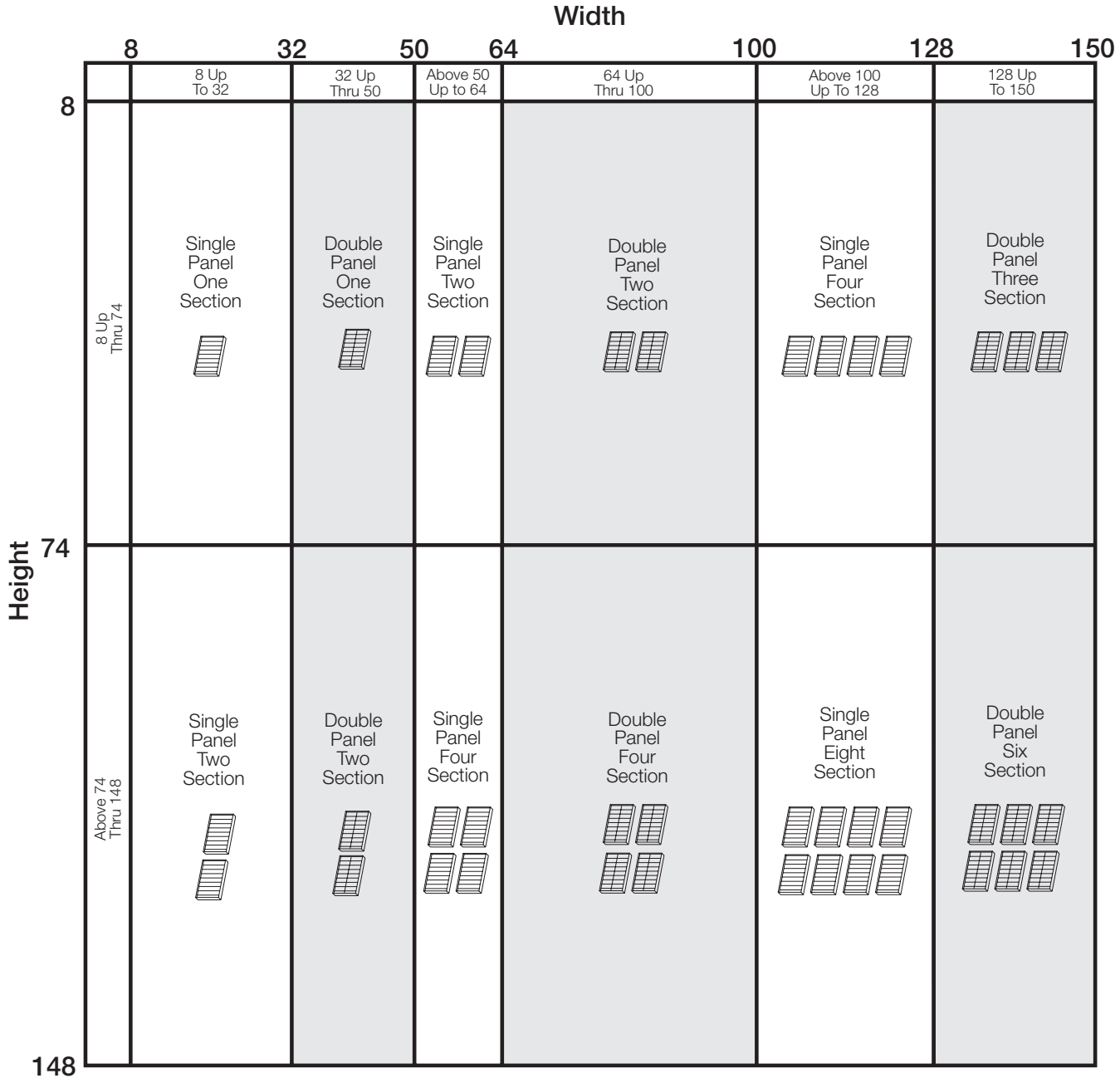

*Width and height given in inches.

Motor Pack Selection for WD-200

The table below will allow you to determine the type and number of motor packs needed for a given size WD-200 backdraft damper. For further information on a particular motor pack, refer to page 3.

Height	Width: 8 Up To 37	Width: 37 Up Thru 50	Width: Above 50 Thru 100	Width: Above 100 Up To 128	Width: 128 Up Thru 150
8 Up Thru 74	1 MP-210 Motor Pack	1 MP-220A Motor Pack	2 MP-220A Motor Packs	4 MP-220A Motor Packs	3 MP-220A Motor Packs
Above 74 Thru 148	2 MP-210 Motor Packs	1 MP-220A Motor Pack	4 MP-220A Motor Packs	8 MP-220A Motor Packs	6 MP-220A Motor Packs

*Width and height given in inches.

WD-210/220 Selection

Multiple section dampers shown below are supplied as equal size sections. Any damper that has multiple sections, both vertically and horizontally, will require field assembly and will require additional reinforcement (not supplied by Greenheck) to support the assembly. These larger dampers must have the additional reinforcement to give them structural stability.

The width dimension is always parallel to the length of the blades.

Note: The type and number of motor packs required can be found on page 7.

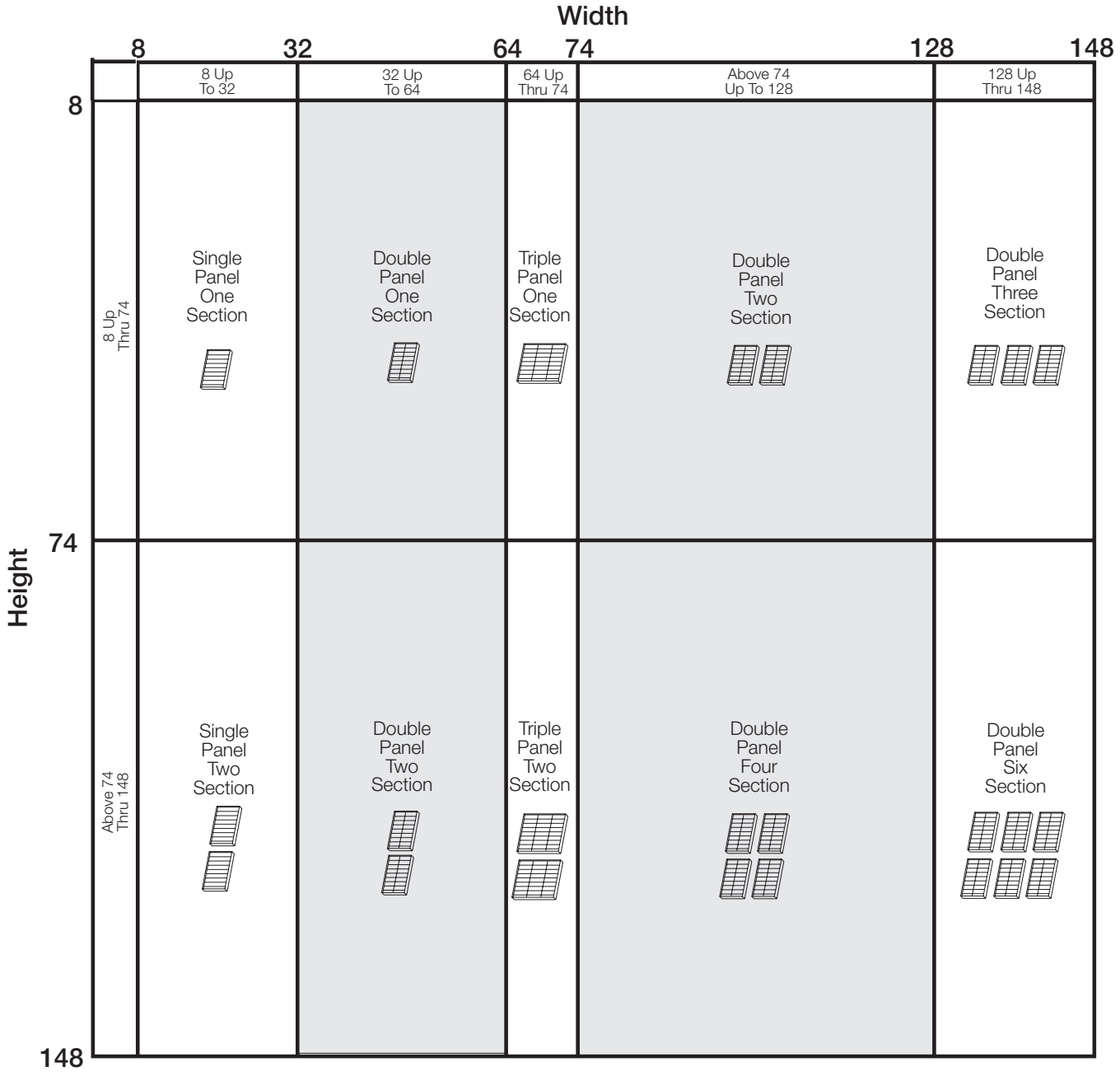

*Width and height given in inches.

Motor Pack Selection for WD-210/220

The table below will allow you to determine the type and number of motor packs needed for a given size WD-200 backdraft damper. For further information on a particular motor pack, refer to page 3.

Height	Width: 8 Up To 37	Width: 37 Up To 64	Width: 64 Up To 128	Width: 128 Up To 148
8 Up Thru 74 (8 – 74)	1 MP-210 Motor Pack	1 MP-220A Motor Pack	2 MP-220A Motor Packs	3 MP-220A Motor Packs
Above 74 Thru 148 (74 – 148)	2 MP-210 Motor Packs	2 MP-220A Motor Pack	4 MP-220A Motor Packs	6 MP-220A Motor Packs

*Width and height given in inches.

End Switch Kit (Optional)

An end switch is a control device used in conjunction with a motor pack (the end switch is usually wired to a fan and/or to a light serving as an open/not open indicator). When the damper is powered open, the blades of the damper hit the spring rod of the end switch which in turn makes a connection allowing power to flow to the fan and/or light. This set up would be used when it is desirable to ensure that the damper is fully open before the fan starts. Otherwise, with the damper blades are not fully open, the pressure and air velocity produced by the fan may damage the blades, making the damper inoperable.

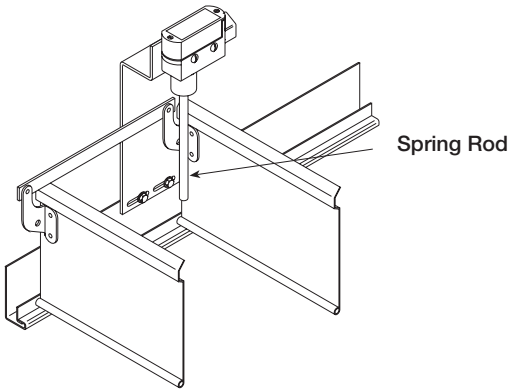

Horizontally Mounted Damper

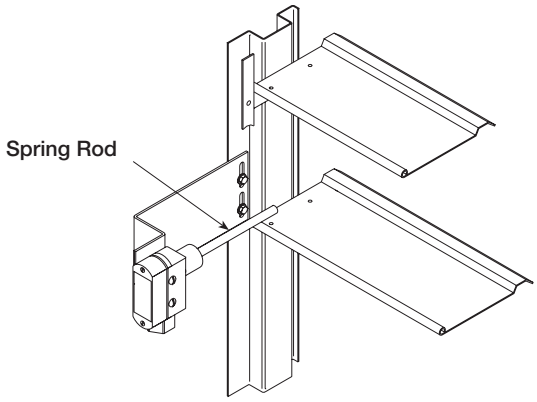

Vertically Mounted Damper

Specifications

Backdraft dampers meeting the following specifications shall be furnished and installed where shown on plans and/or described in schedules.

Dampers shall consist of: 18 ga. (1.3mm) galvanized steel frame with 3½ in. (89mm) depth; blades from 0.032 in. - 0.040 in. (.8mm - 1 mm) roll-formed aluminum; 3/16 in. in. (4.8mm) dia. plated steel stub axles turning in acetal bearings; damper shall be equipped with extruded vinyl blade seals; and internal 0.064 in. (1.6mm) aluminum tie bar (on-blade).

Damper manufacturer's printed application and performance data including pressure, velocity, and temperature limitations shall be submitted for approval showing damper suitable for pressures to 2 in. wg (.5 kPa), velocities to 2500 fpm (13 m/s) and temperatures to 180°F (82°C). Testing and ratings to be in accordance with AMCA Standard 500-D.

Basis of design is model WD-200.

GREENHECK®

P.O. Box 410 • Schofield, WI 54476-0410 • 715.359.6171 • greenheck.com

Copyright © 2015 Greenheck Corporation
WD-200 Series Rev. 11 March 2015

MERVE 8 Filter

June 29, 2015

Farr 30/30®

High-Capacity MERV 8 Pleated Panel Filter

ENERGY COST INDEX ★★★★★

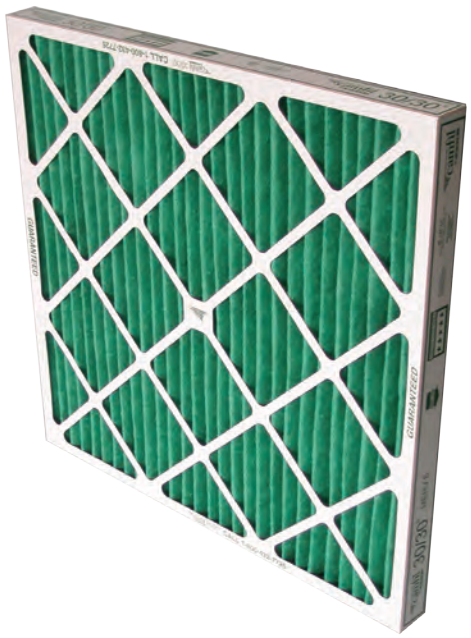

The Camfil Farr 30/30 has set the industry standard for pleated panel filters since 1963. With over 45 design enhancements, it continues to provide the industry's best value for medium efficiency filtration.

Setting the standard by which other pleated filters are judged, modern media manufacturing techniques and proprietary technological advancements ensure that the 30/30 is:

- Guaranteed to perform at the rated efficiency, or better, throughout the life of the filter.
- Guaranteed to last longer than any other pleated panel filter available.

Performing at MERV 8, using a mechanical particle capture principle, the 30/30 will not drop in efficiency while in service as will other pleated panel filters that incorporate an electret charge to obtain a MERV 8 value.

Its radial pleat design provides the longest life and lowest average pressure drop reducing the number of filter changes so your facility will use less fan power to move air through the filter.

The high wet-strength beverage frame and welded wire media backing provide structural integrity in any type of HVAC application virtually eliminating the additional costs associated with filter bypass or filter failure.

Available in 1", 2" or 4" deep configurations, the 30/30 is ideal for commercial, industrial, institutional or any other application where the ultimate level of protection of equipment and indoor air quality is a concern.

The 30/30 has an Energy Cost Index (ECI) of five stars, the highest performance rating available.

[1] A 5-Star rating indicates that this filter performs in the top 20% of all products of similar construction in the HVAC industry. Factors of consideration include maintained efficiency, energy usage and resistance to air flow. Detailed evaluation information is available from your Camfil sales outlet or on the web at www.camfilfarr.com.

The best performing pleated panel filter — guaranteed!

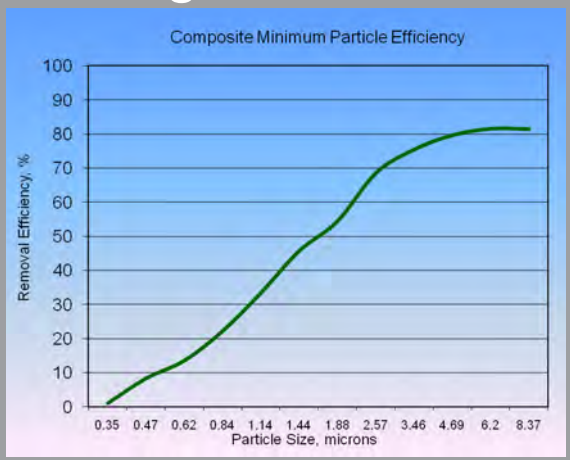

Composite minimum efficiency values of the 30/30 when evaluated per ASHRAE Standard 52.2-2007. The 30/30 has a MERV of 8 and MERV-A of 8 when tested per appendix J.

The highest media weight, more than any other pleated panel filter, and uniform lofting for high dust holding capacity, ensure that the 30/30 will last longer in any HVAC application.

Exclusive MERV 8 Performance from Camfil Media

The 30/30 media is manufactured from a proprietary blend of fibers that incorporate a mechanical principle of particle capture. The filter does not require an electret charge which would dissipate and reduce filter's efficiency after minimal hours of operation in a system. The media is lofted to a uniform depth to enhance the depth-loading characteristic and ensure the longest life of any pleated filter available. The high-loft also offers a lower resistance to airflow so fan horsepower required to move air through the filter is minimized. Camfil evaluates the quality of all incoming raw materials to maintain product integrity as part of a rigorous quality control program.

Welded Wire Grid Maintains Radial Pleat Design

The media is formed into a radial pleat for uniform dust loading and full use of the media area. V-style pleats blind while loading preventing full utilization of the media area and increasing the filters pressure drop resulting in increased energy usage. A welded wire grid, spot welded on one-inch centers maintains each radial pleat and maintains media stability through varying airflows.

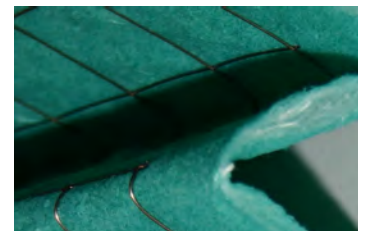

Rounded radial pleats, instead of v-shape pleats, allow full usage of media area.

Diagonal support members, glued to each pleat at its apex, helps maintain pleat stability and filter rigidity.

High Wet-Strength Beverage Board Frame

The high wet-strength beverage board frame, the thickest board in the industry, creates a stable and non-yielding media pack. Filter bypass is virtually eliminated because the filter fits securely in the filter holding mechanism. The media is bonded to the frame ensuring that all of the air seen by the filter will be treated by the filter. Diagonal support members are bonded to each pleat to maintain pleat spacing and add stability to the pack through bridge-style engineering. The 30/30 is guaranteed to 2.0" w.g. of pressure filter without failure. Costly filter blowouts and compromising of HVAC system cleanliness is eliminated.

ISO 9001:2008 Certified Quality Control

Every 30/30 filter is identified on the frame with a unique manufacturing code that allows us to analyze every component of construction from raw materials to the point where the product is boxed for shipping. Filters are inspected for structural integrity so they are capable of operating in the harshest HVAC system conditions. The adhesiveness of diagonal support members to pleat apexes is inspected so pleat spacing is uniform to provide longer filter life. Each media lot is laboratory tested to confirm consistent performance and individual filters are submitted from each manufacturing facility on a strict schedule for ASHRAE 52.2 testing in our world-class testing facility.

The standard of the industry, by Camfil.

Used in many systems as a prefilter, the 30/30 extends the life of final filters by capturing larger contaminant and thereby allowing the final filters to concentrate on removing smaller particles such as those that are respirable and can cause lung damage. The 30/30 is also an excellent choice when applied as the only filter in a system to keep coils clean and maintain efficiency, and protect building occupants from contaminants of annoyance such as pollen, plant spores, atmospheric dusts and other indoor air irritants.

Unprecedented Industry Guarantee

If our filters don't outlast and outperform your current filters, we'll replace them, FREE.
For guarantee details and a distributor list, visit www.camfil.com.

PERFORMANCE DATA

2" Deep Filter (actual filter depth 1.75")

Part Number	Nominal Depth (inches)	Nominal Size (inches)	Actual Size (inches)			Initial Resistance (inches w.g.)	Airflow Capacity (cfm)	Total Media Area (sq. ft.)	Pleats per Linear Foot
			Depth	Height	Width				
049880-019	2	16 x 16	1.75	15.50	15.50	0.31	890	7.8	15 pleats per linear foot
049880-008		20 x 10		19.50	9.50		700	6.0	
049880-009		20 x 14		19.50	13.50		975	8.3	
049880-007		20 x 12		19.50	11.88		835	7.4	
049880-011		20 x 15		19.50	14.50		1045	9.3	
049880-001		20 x 16		19.50	15.50		1100	9.9	
049880-013		20 x 18		19.50	17.50		1250	10.8	
049880-002		20 x 20		19.50	19.50		1390	11.9	
402271-007		20 x 30		19.50	29.50		2085	18.2	
049880-006		24 x 12		23.38	11.38		1000	8.4	
049880-015		24 x 18		23.50	17.50		1500	13.0	
049880-012		24 x 20		23.50	19.50		1670	14.3	
049880-005		24 x 24		23.38	23.38		2000	17.3	
049880-010		25 x 14		24.50	13.50		1220	10.4	
049880-020		25 x 15		24.50	14.50		1300	11.6	
049880-016		24 x 16		24.50	15.50		1335	11.8	
049880-004		25 x 16		24.50	15.50		1390	12.4	
049880-014		25 x 18		24.50	17.50		1565	13.5	
049880-003		25 x 20		24.50	19.50		1740	14.9	
049880-018		25 x 25		24.50	24.50		2170	19	

1" Deep Filter (actual filter depth 0.88")

Part Number	Nominal Depth (inches)	Nominal Size (inches)	Actual Size (inches)			Initial Resistance (inches w.g.)	Airflow Capacity (cfm)	Total Media Area (sq. ft.)	Pleats per Linear Foot
			Depth	Height	Width				
404207-003	1	10 x 10	0.88	9.50	9.50	0.23	240	1.6	16 pleats per linear foot
054862-025		12 x 12		11.50	11.50		350	2.5	
404207-005		16 x 12		15.50	11.50		470	3.3	
054862-012		16 x 16		15.50	15.50		620	4.3	
054862-009		20 x 7		19.50	6.50		340	2.4	
054862-016		20 x 10		19.50	9.50		490	3.3	
054862-019		20 x 12		19.50	11.50		580	4.1	
054862-006		20 x 14		19.50	13.50		680	4.6	
054862-008		20 x 15		19.50	14.50		730	5.1	
054862-001		20 x 16		19.50	15.50		780	5.4	
054862-020		20 x 18		19.50	17.50		880	6.1	
054862-002		20 x 20		19.50	19.50		970	6.6	
054862-021		22 x 22		21.50	21.50		1180	8.2	
054862-022		24 x 10		23.50	9.50		580	4.0	
054862-010		24 x 12		23.50	11.50		700	4.9	
404207-004		24 x 14		23.50	13.50		820	5.5	
054862-015		24 x 16		23.50	15.50		970	6.7	
054862-028		24 x 18		23.50	17.50		1050	7.3	
054862-011		24 x 20		23.50	19.50		1165	8.0	
054862-005		24 x 24		23.50	23.50		1400	9.8	
054862-023		25 x 10		24.50	9.50		610	4.1	
054862-024		25 x 12		24.50	11.50		730	5.2	
054862-007		25 x 14		24.50	13.50		850	5.7	
054862-013		25 x 15		24.50	14.50		910	6.4	
054862-004		25 x 16		24.50	15.50		970	6.7	
054862-017		25 x 18		24.50	17.50		1100	7.6	
054862-003		25 x 20		24.50	19.50		1215	8.3	
054862-014		25 x 25		24.50	24.50		1520	10.5	

Farr 30/30®

High-Capacity MERV 8 Pleated Panel Filter

PERFORMANCE DATA (continued)

4” Deep Filter (actual filter depth 3.75”)

Part Number	Nominal Depth (inches)	Nominal Size (inches)	Actual Size (inches)			Initial Resistance (inches w.g.)	Airflow Capacity (cfm)	Total Media Area (sq. ft.)	Pleats per Linear Foot
			Depth	Height	Width				
059413-004	4	20 x 16	3.75	19.38	15.38	0.27	1100	15.7	11 pleats per linear foot
059413-003		20 x 20		19.38	19.38		1390	18.9	
059413-002		24 x 12		23.38	11.38		1000	13.9	
059413-009		24 x 18		23.38	17.38		1500	20.2	
059413-008		24 x 20		23.38	19.38		1670	22.7	
059413-001		24 x 24		23.38	23.38		2000	27.7	
059413-005		25 x 16		24.38	15.38		1390	19.7	
059413-006		25 x 20		24.38	19.38		1740	23.6	
059413-010		25 x 25		24.38	24.38		2170	30.0	
059413-007		25 x 29		24.38	28.38		2520	35.4	

Data Notes:
1.0” w.g. recommended final resistance for all depths. System design may dictate an alternative changeout point. Contact factory for guidance.
The 30/30 has been listed by Underwriters Laboratories as UL 900.
Maximum operating temperature 200º F (93º C).
2” and 4” deep filters rated at 250 feet per minute (fpm) medium and 500 fpm high. 1” deep filter’s rated at 175 fpm medium and 350 fpm high.
For product specification in RTF format please go to www.camfil.com.

4” deep 30/30 is available with a header for side-access housing installation. Request Product Sheet 1003.

Specification

1.0 General

1.1 - Air filters shall be medium efficiency ASHRAE pleated panels consisting of cotton and synthetic media, welded wire media support grid, and beverage board enclosing frame.

1.2 - Sizes shall be noted on drawings or other supporting materials.

2.0 Construction

2.1 - Filter media shall be a cotton and synthetic blend, lofted to a uniform depth of 0.15”, and formed into a uniform radial pleat.

2.2 - A welded wire grid, spot-welded on one-inch centers and treated for corrosion resistance shall be bonded to the downstream side of the media to maintain radial pleats and prevent media oscillation.

2.3 - An enclosing frame of no less than 28-point high wet-strength beverage board shall provide a rigid and durable enclosure. The frame shall be bonded to the media on all sides to prevent air bypass. Integral diagonal support members on the air entering and air exiting side shall be bonded to the apex of each pleat to maintain uniform pleat spacing in varying airflows.

3.0 Performance

3.1 - The filter shall have a Minimum Efficiency Reporting Value of MERV 8 when evaluated under the guidelines of ASHRAE Standard 52.2. It shall also have a MERV-A of 8 when tested per Appendix J of the same standard. The media shall maintain or increase in efficiency over the life of the filter.

3.2 - Initial resistance to airflow shall not exceed 0.23”, 0.31” or 0.27” w.g. at an airflow of 350, 500 or 500 fpm on 1”, 2” or 4” deep models respectively.

3.3 - The filter shall have an Energy Cost Index (ECI) value of five stars.

3.4 - Filter shall be listed UL 900 by Underwriters Laboratories.

3.5 - Manufacturer shall provide evidence of facility certification to ISO 9001:2008.

3.6 - Manufacturer shall guarantee the integrity of the filter pack to 2.0” w.g.

Supporting Data - Provide product test report including all details as prescribed in ASHRAE Standards 52.2, including Appendix J.

Air filters shall be Camfil Farr 30/30 or equal.

© Copyright Camfil # 1002 - 0315

Camfil | 1 North Corporate Drive, Riverdale, NJ 07457 | Tel: (973) 616-7300

Plumbing Cutsheets

SMITH® JAY R. SMITH MFG. CO.®
DIVISION OF SMITH INDUSTRIES, INC.
POST OFFICE BOX 3237
MONTGOMERY, ALABAMA 36109-0237 (USA)
TEL: 334-277-8520 FAX: 334-272-7396 www.jrsmith.com
CUSTOMER DRIVEN

MEMBER OF:

LOCATION

GREASE INTERCEPTORS

GREASE INTERCEPTORS WITH EXTENSION

FUNCTION: Used in kitchens, restaurants, institutions and all types of food processing areas where waste water contains grease, fats and oils which must be intercepted and collected before entering the drainage system. Interceptors with extensions are installed recessed in the floor with cover flush with finished floor. Extension provides additional roughing depth from top of interceptor to center line of inlet and outlet. Extension should not be used as a means for supporting the assembly. The entire interceptor body and extension must rest on solid ground or suitable support hangers.

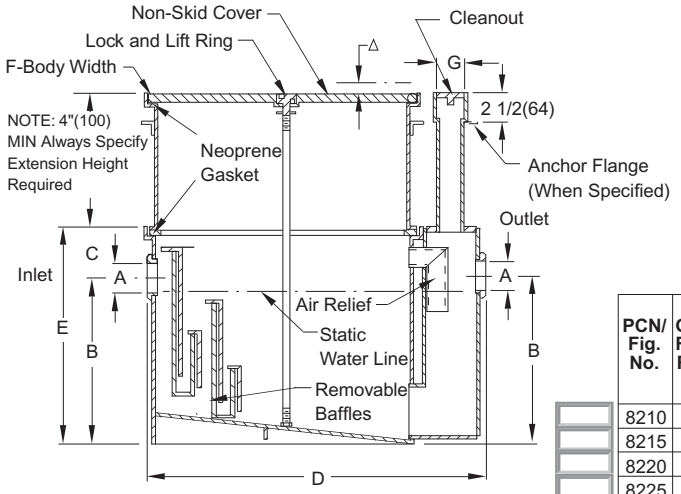

WHEN ORDERING, SPECIFY HEIGHT REQUIRED FROM TOP OF INTERCEPTOR TO TOP OF EXTENSION USING SUFFIX NUMBER FOR EXTENSION HEIGHT.
EXAMPLE: FIG. 8225 WITH 6"(150) EXTENSION -SPECIFY FIG. 8225 (-E06)

Figs. 8210 thru 8250 carry the Plumbing and Drainage Institute Certification Seal Certifying conformance to Grease Interceptor Standard PDI-G101.

PCN/ Fig. No.	GPM Flow Rate	Grease Cap Lbs.	Inlet and Outlet Size	Dimensions					C.O. Plug Size
				Roughing Dimensions			Body		
							Height	Width	
			A*	B	C	D	E	F	G
8210	10	20	02(50)	9 1/2(240)	3 3/4(95)	21 1/4(540)	13 1/4(335)	11 1/2(290)	2(51)
8215	15	30	02(50)	12(305)	3 1/2(89)	25(635)	15 1/2(395)	13 1/2(345)	2(51)
8220	20	40	03(75)	13(330)	4(100)	28 1/2(725)	17(430)	15 3/4(400)	2(51)
8225	25	50	03(75)	15 1/4(390)	4 1/2(115)	30(760)	19 3/4(500)	16 3/4(425)	2(51)
8235	35	70	03(75)	16(405)	5(125)	32 1/2(825)	21(535)	18 1/4(465)	2(51)
8250	50	100	03(75)	17 1/2(445)	6 3/4(170)	35 1/2(900)	24 1/4(615)	20 3/4(525)	2(51)

*Available with larger inlet and outlet when specified.

REGULARLY FURNISHED:
Steel Interceptor and Extension with Gray Duco Coating Inside and Outside and Flow Control Fitting.

ΔNOTE: When tile top is specified, add 1"(25). When Terrazzo top is specified, add 1 1/4"(32).

NOTE: 2"(51) must be added to dimension D and F for clearance of extension clamps.

NOTE: Dimensions shown in parentheses are in millimeters.

VARIATIONS:
- Anchor Flange -F
- Δ Cover Recessed for Terrazzo Ceramic or Quarry Tile -QC
- Δ Cover Recessed for Vinyl or Asphalt Tile -TC
- Flange and Flashing Clamp -F-C
- Lift Out Sediment Bucket -B
- NO-HUB Adaptor (2) Req'd (Specify Fig. 2646Y)
- Traffic Rated Cover-H20

OPTIONAL MATERIALS:
- Acid Resistant Coating Inside - ARI
- Acid Resistant Coating Outside - ARO
- Acid Resistant Coating Inside and Outside - ARIO
- Aluminum Cover -AC

NOTE: It is the responsibility of the installer to check all parts (internal and external) to verify they are in their proper operating order and location.

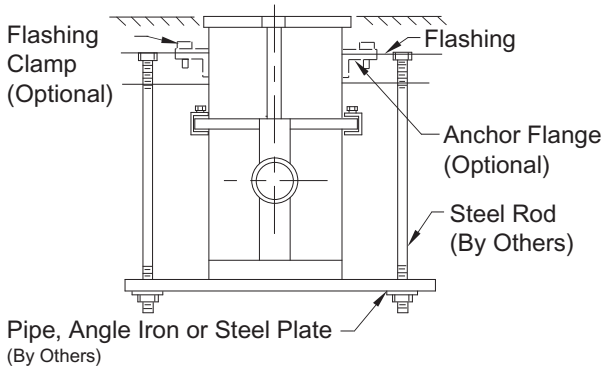

INSTALLATION NOTE

The Steel Extension supplied with the 8200 Series Interceptor is designed to increase the roughing dimension from the Inlet-Outlet centerline to the finished floor. The Extension and Anchoring Flange should not be used to support the unit. When installed in ground floor locations, the Interceptor must rest on solid ground or on some suitable concrete pad. If the 8200 Series Interceptor is installed in an upper floor (suspended in the ceiling below), a suitable method of supporting the entire unit must be provided and meet the approval of the structural engineer and architect. The installation sketch shows a typical Interceptor with Extension and one method of supporting the entire weight. Support of an interceptor, whether supplied with a cradle or independently, is essential for safety and functional integrity of the installation. Upon request, Jay R. Smith Mfg. Co. will provide the weight of the specific unit. Additional weight must be added to compensate for the weight of the liquid/grease when full and in the flowing mode of operation. Also shown are the "When Specified" options of an Anchor Flange and Flashing Clamp.

REV.	DATE	DESCRIPTION	BY	CKD. BY
J	2-3-05	Revised Variations	RN	CL
H	8-13-02	Revised "F Dim." in Chart	RN	
G	12-10-98	Added Notes	CMD	J Mc
F	6-23-97	Redraw Baffles	EMB	BS
E	7-10-95	Added millimeters	CMD	BS

WEIGHT POUNDS | VOLUME CUBIC FEET

FIGURE NUMBER **8200 SERIES**

J | DRAWING NUMBER S8200 SERIES | SIZE A | SCALE: NONE | DATE: 4-24-85 | APPROVED BY: KG | CHECKED BY: CR | DRAWN BY: VGD | 8200 SERIES | FIGURE NUMBER

WE CAN ASSUME NO RESPONSIBILITY FOR USE OF SUPERSEDED OR VOID DATA
DIMENSIONS ARE SUBJECT TO MANUFACTURERS TOLERANCE AND CHANGE WITHOUT NOTICE

Location:

MIFAB® BV1000 — CAST IRON BACKWATER VALVE WITH PVC FLAPPER

Specification: MIFAB Series BV1000 lacquered cast iron backwater valve with no hub inlet and outlet, gasketed bolt cover and automatic PVC flapper type backwater valve.

Function: Used in main branch or sewer lines to prevent backflow from the sewers. Full opening access through cover to the flapper assembly for repair and maintenance.

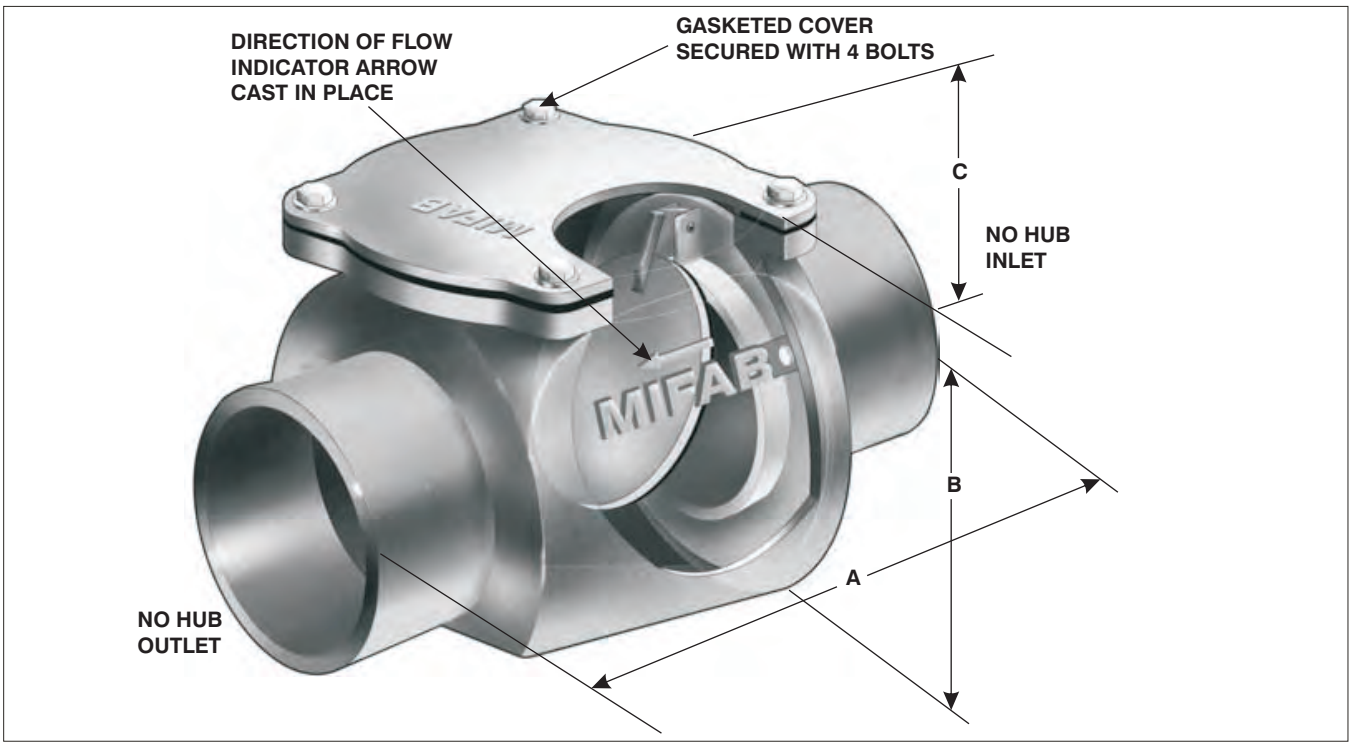

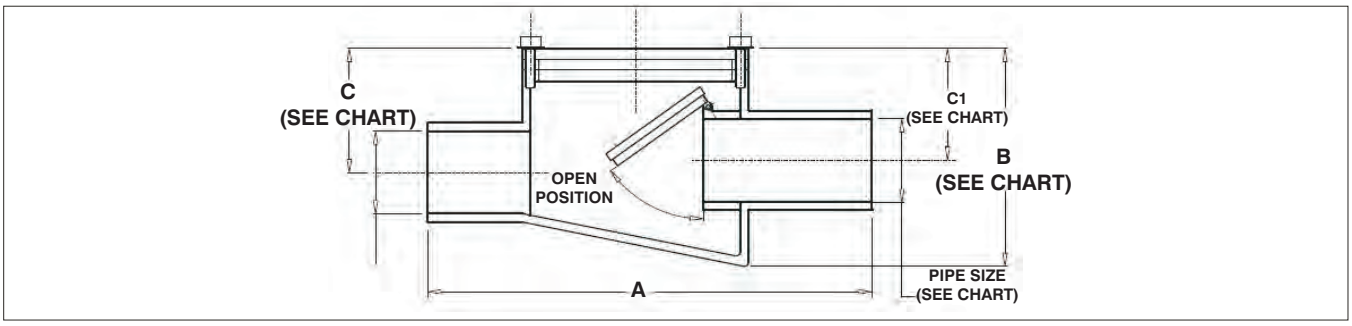

Note: Do not use for pressurized applications; for gravity flow only. Backflow protection is prevented when the valve is obstructed by debris or sludge; clean regularly.

MODEL NUMBER	CONNECTION SIZE	LENGTH A	HEIGHT B	INVERT (OUTLET) C	INVERT (INLET) C1
○ **BV1002**	2” No Hub	10 3/4” (273)	5 ½” (140)	2.40” (61)	2 1/8” (54)
○ **BV1003**	3” No Hub	11 3/4” (298)	6 3/4” (171)	3.40 (86)	3 1/8” (79)
○ **BV1004**	4” No Hub	12 3/4” (324)	7 ½” (191)	3 5/8” (92)	3 ½” (89)
○ **BV1006**	6” No Hub	14 3/4” (375)	10” (254)	5” (127)	4 5/8” (117)
○ **BV1008**	8” No Hub	17” (432)	12 1/4” (311)	7” (178)	6 ½” (165)
○ **BV1010**	10” No Hub	23 5/8” (600)	13 ½” (343)	7” (178)	7 ½” (191)

SUFFIX	OPTIONAL VARIATIONS:	SUFFIX	
☐ -13	All galvanized	☐ -HS	Hub and spigot connection
☐ -BA	Buy American Act compliant product	☐ -PA	Pennsylvania Steel Act compliant product

Job Name:
Section No:
Schedule No:
Page No:
Contractor:
Purchase Order No:

MIFAB *reserves the right to make changes in material and design without formal notice and obligation.*

USA: 1-800-465-2736 www.mifab.com CAN: 1-800-387-3880

CMA DISHMACHINES

CMA-180

High Temperature
Single Rack
Dishwasher

Corner Model

NSF

UL LISTED COMMERCIAL DISHWASHER 864T

c UL us LISTED COMMERCIAL DISHWASHER 864T

FEATURES:

- **Energy Star Qualified.**
- 60 racks / 240 covers per hour.
- Economical to operate. Uses only .96 gallons of water per cycle.
- Automatic soil purging system. Filters wash water and traps plate debris into an external tray. Tray can be easily removed for dumping contents.
- All stainless steel construction offers durable performance and years of trouble free operation.
- Built-in chemical resistant industrial 5kW heater and optional 12kW booster heater are proven to be more durable than commercial style heaters.
- Unique spray arm system features upper and lower stainless steel wash arms with reinforced end caps. Specially designed pull-pins allow wash arms to be easily removed for cleaning.
- Top mounted control box is water tight and includes a rack counter, extended wash/delimer switch and easy to read temperature gauges.
- Auto start/stop makes operation safe and easy.
- Field convertible for a wide range of applications.
- Safety Temp feature assures 180°F sanitizing rinse every cycle.
- Built-in booster heater configured for both 40°F and 70°F temperature rise.
- Single point electrical connection.
- Field convertible to single or three phase, corner or straight through operation.
- Automatic tank fill.
- Interchangeable upper and lower arms.

Top mounted control box is water tight and includes a rack counter, extended wash/delimer switch and easy to read temperature gauges.

External scrap tray maintains clean wash water and prevents debris from clogging the drain.

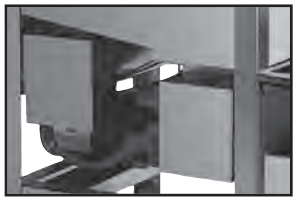

Industrial wash tank and optional booster heaters are designed for years of trouble free service.

Unique pull-pin design allows wash arms to be easily removed for cleaning.

ENERGY STAR

ENERGY STAR PARTNER

ali GROUP

CMA Dishmachines 12700 Knott Street Garden Grove, CA 92841• 800-854-6417 • 714-898-8781 • Fax: 714-895-2141 • www.cmadishmachines.com

CMA reserves the right to modify specifications or discontinue models without prior notification.

Printed in the U.S.A.

© 2009 CMA, Inc.

CMA-180

High Temperature
Single Rack
Dishwasher

WARNING: Plumbing connections must be made by a qualified service company who will comply with all available Federal, State, and Local Health, Plumbing and Safety codes.

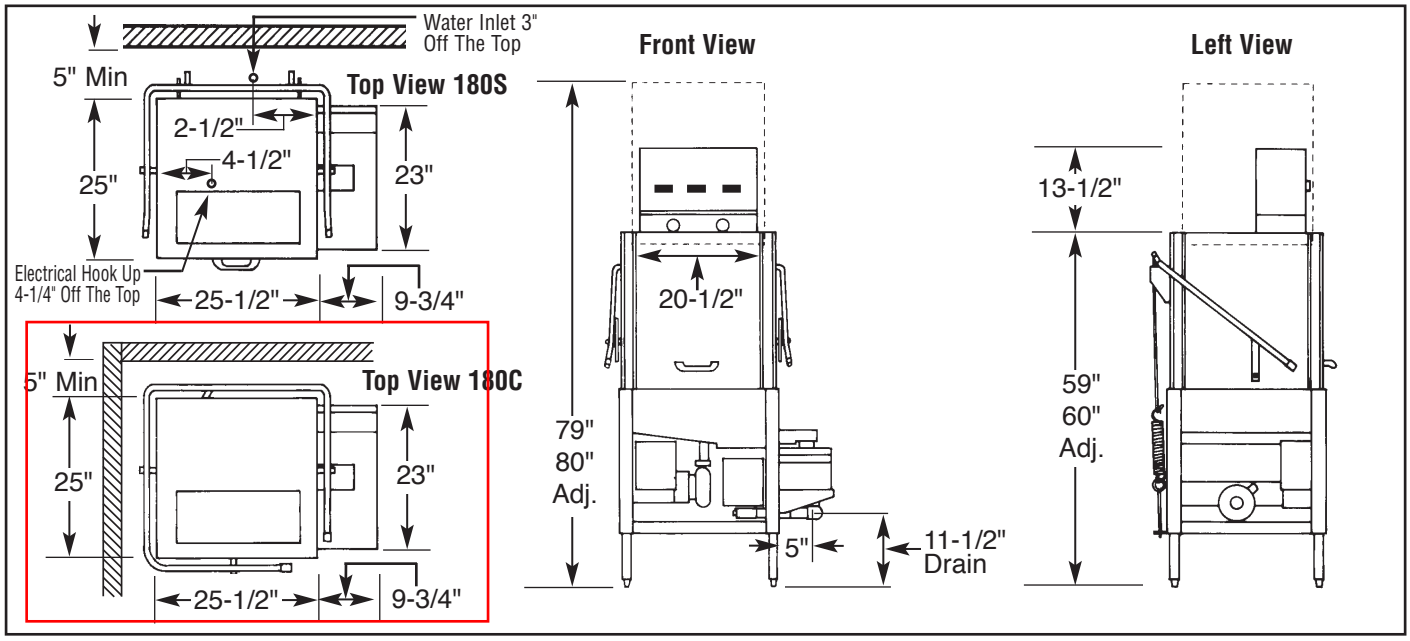

Specifications:

MODEL CMA-180	USA	METRIC
WATER CONSUMPTION		
PER RACK	.96 GAL	(3.6 L)
PER HOUR	52 GPH	(197 L)
OPERATING CYCLE		
WASH TIME - SEC.	49	49
RINSE TIME - SEC.	12	12
TOTAL CYCLE	61	61
OPERATING CAPACITY		
RACKS PER HOUR	60	60
WASH TANK CAPACITY	8 GAL.	(30.3 L)
PUMP CAPACITY	52 GPM	(197 LPM)
WATER REQUIREMENTS		
WITHOUT BOOSTER HEATER	180°F	(82°C)
WITH BOOSTER HEATER	140°F	(60°C)
WATER INLET	3/4"	(1.9cm)
DRAIN CONNECTION	2"	(5.1cm)
RINSE PRESSURE SET	20 ± 5psi	(1.41 kg/cm²)
OPERATING TEMPERATURE		
WASH-°F (MIN)	155°F-160°F	(68°C-71°C)
RINSE-°F (MIN)	180°F-195°F	(82°C-90°C)

	USA	METRIC
WASH PUMP MOTOR HP	1	1
DIMENSIONS		
DEPTH	25"	(63.5cm)
WIDTH	25 -1/2"	(65cm)
HEIGHT	59"-60"	(150-152cm)
STANDARD TABLE HEIGHT	34"	(86.3cm)
MAX CLEARANCE FOR DISHES	17-1/2"	(44cm)
DRAIN CONNECTION (OFF FLOOR)	11-1/2"-12-1/2"	(29-32cm)
STANDARD DISHRACK	1	1
DIMENSIONS	19-3/4" X 19-3/4"	(50X50cm)

ELECTRICAL RATING	VOLTS	PHASE	AMPS
WITHOUT BOOSTER	208	1	28
	240	1	30
	208	3	19
	240	3	21
	480	3	9
WITH BOOSTER	208	1	71
	240	1	80
	208	3	45
	240	3	50
	480	3	23

	USA	METRIC
SHIPPING WEIGHT		
WITHOUT BOOSTER	332#	(151kg)
WITH BOOSTER	375#	(170kg)

Summary Specifications: Model CMA-180

The model CMA-180 single tank, high temperature dishwasher is designed for years of trouble free service, producing sparkling results while conserving energy, water and chemicals. This machine is available with an optional "built in" booster heater, assuring a continuous supply of 180°F hot water, and is easily field convertible for either corner or straight installation. Unique soil purging system filters wash water and plate debris into an external tray. The CMA-180 is NSF, UL, CUL and CE approved. Constructed entirely of stainless steel.

Available Models

- CMA-180S Straight
- CMA-180SB Straight with booster
- CMA-180C Corner
- CMA-180CB Corner with booster

Available Options:

- Exhaust Fan Time Control
- Built-in 12kW booster heater
- CMA-180 Conversion Kit Corner to Straight
- CMA-180 Conversion Kit Straight to Corner
- Alternative electrical available for export
- Stainless steel dishtables
- Dual power supply connections

CMA Dishmachines 12700 Knott Street Garden Grove, CA 92841 •800-854-6417 • 714-898-8781 • Fax: 714-895-2141 • www.cmadishmachines.com

CMA reserves the right to modify specifications or discontinue models without prior notification.

Printed in the U.S.A.

© 2009 CMA, Inc.

Z742
TRAP DRAIN, LIGHT-DUTY

SPECIFICATION SHEET

TAG _____

Dimensional Data (inches and [mm]) are Subject to Manufacturing Tolerances and Change Without Notice

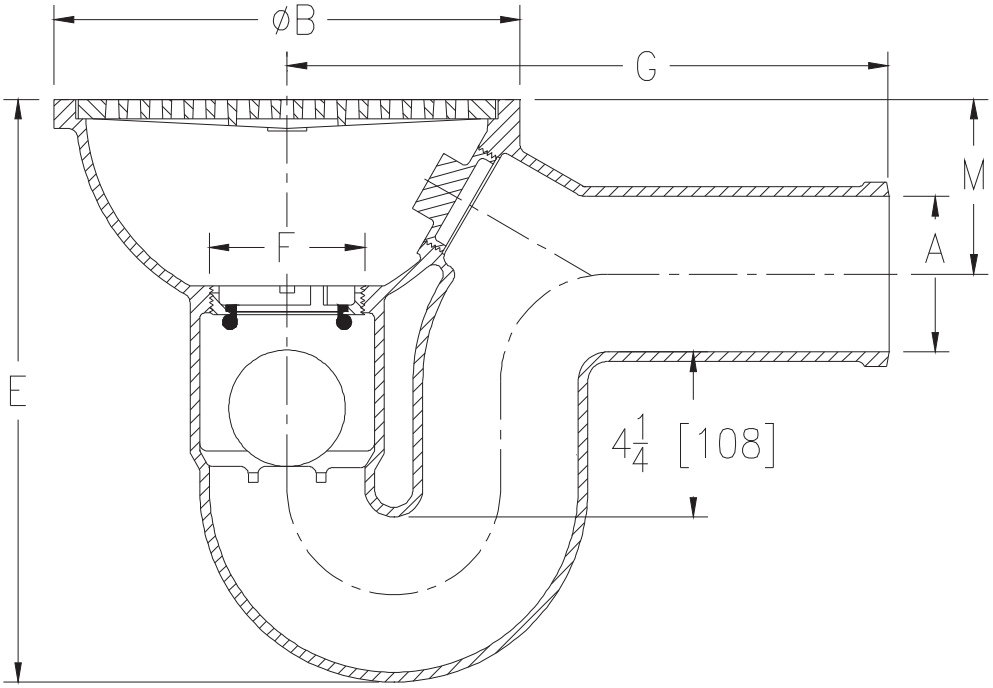

		Dimensions In Inches			Approx. Wt. Lbs. [kg]	Grate Open Area Sq. In. [cm²]
		B	G	M		
2 [51]	2 [51]	8-1/4 [210]	10-1/8 [257]	3-1/2 [89]	25 [11]	13 [84]
3 [76]	3-1/2 [89]	10-1/2 [267]	12-1/2 [318]	4 [102]	35 [16]	14 [90]
4 [102]	3-1/2 [89]	12 [305]	15-1/2 [394]	4-1/2 [114]	55 [25]	19 [123]

ENGINEERING SPECIFICATION ZURN Z742 8, 10 or 12 [203, 254 or 305] Diameter top drain, Dura-Coated cast iron body with integral double wall trap and side outlet, with ball float type back-water valve, internal bronze cleanout and light-duty loose slotted grate.

OPTIONS (Check/specify appropriate options)

PIPE SIZE	(Specify size/type) **OUTLET**	**'E' BODY HT. DIM.**
2 [51]	____ SP Spigot	10-3/4 [273]
3 [76]	____ SP Spigot	12-3/4 [324]
4 [102]	____ SP Spigot	15 [381]

PREFIXES

____ Z D.C.C.I. Body and Top*
____ ZB D.C.C.I. Body with Polished Bronze Top (Add 3/16 [5] to 'E' Dim.)
____ ZN D.C.C.I. Body with Polished Nickel Bronze Top (Add 3/16 [5] to 'E' Dim.)

SUFFIXES

____ -DG Duresist Grate
____ -G Galvanized Cast Iron
____ -LV (Less) Backwater Valve
____ -TS Top Secured with Slotted Screws
____ -VP Vandal-Proof Secured Top

*REGULARLY FURNISHED UNLESS OTHERWISE SPECIFIED

REV. E DATE: 11/8/10 C.N. NO. 120286

DWG. NO. 58960 PRODUCT NO. Z742

ZURN INDUSTRIES, LLC ♦ SPECIFICATION DRAINAGE OPERATION ♦ 1801 Pittsburgh Ave. ♦ Erie, PA 16514
Phone: 814/455-0921 ♦ Fax: 814/454-7929 ♦ World Wide Web: www.zurn.com
In Canada: ZURN INDUSTRIES LIMITED ♦ 3544 Nashua Drive ♦ Mississauga, Ontario L4V1L2 ♦ Phone: 905/405-8272 Fax: 905/405-1292

FD-2370 PVC Floor Sink
TAG _____

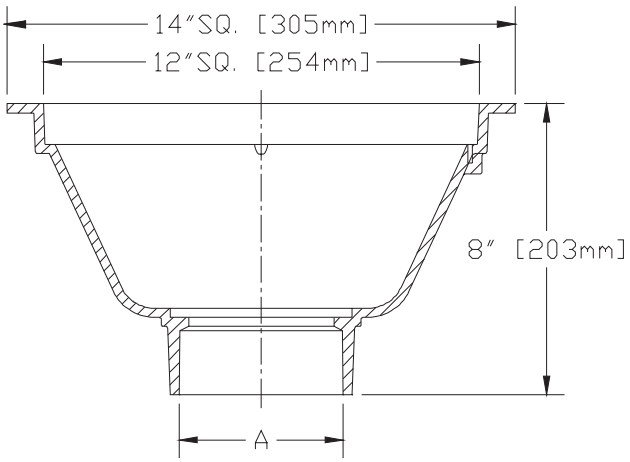

FD-2370 **PVC Floor Sink**

Recommended for sanitary installations. The radiused body in constructed of PVC. Manufactured according to ASME A112.6.7-01

Options:

__ **-DS** Dome Strainer
__ **-F** Full Grate
__ **-H** 1/2 Grate
__ **-T** 3/4 Grate
__ **-Y** Sediment Bucket

	Product	'A' Connections
__	FD-2370-PV2	2"[51mm] PVC Hub
__	FD-2370-PV3	3"[76mm] PVC Hub
__	FD-2370-PV4	4"[102mm] PVC Hub

Typical installation

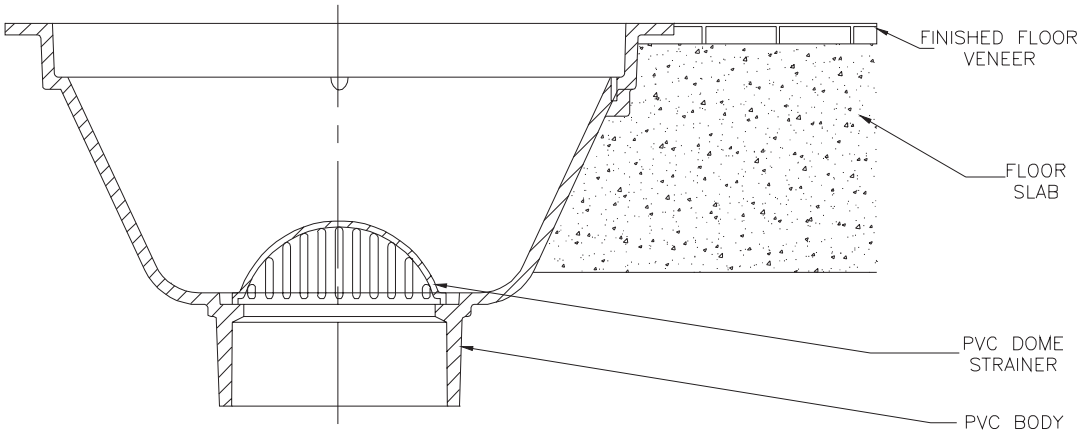

ZURN LIGHT COMMERCIAL PLUMBING PRODUCTS 2855 GIRTS ROAD , JAMESTOWN, NY 14701 PHONE: 716-665-1131 FAX: 716-665-3126

Rev. Date: 5/23/03 C.N. No. 90537
Dwg. No. 69975 Product No. FD-2370

STAINLESS STEEL

HAND SINKS NSF

STANDARD

SPLASH MOUNTED FAUCETS

7-PS-60

7-PS-68

7-PS-50

DECK MOUNTED FAUCET

7-PS-20

7-PS-67

SINGLE HOLE PUNCH
Faucet omitted

7-PS-71

DOUBLE HOLE PUNCH
Faucet omitted

7-PS-70

LARGE SIZE SINK BOWL

7-PS-45

Features
Large Size
Sink Bowl
16" x 20" x 8"

Item #: _____ ***Qty #:*** _____

Model #: _____

Project #: _____

Keyhole Bracket for easier installation and greater stability.

FEATURES:

One piece **Deep Drawn** sink bowl design.

Sink bowl is 10" x 14" x 5"*.

(***7-PS-45** sink bowl size is 16" x 20" x 8")

All sink bowls have a large liberal radii with a minimum dimension of 2" and are rectangular in design for increased capacity.

Keyhole wall mount bracket.

Stainless steel basket drain 1-1/2" IPS.

Specific Features:

7-PS-50 features lever operated drain and built-in overflow with plastic overflow tube and spring clamps. P-Trap is 1 1/2".

7-PS-20 4" O.C. deck mounted centerset faucet furnished with aerator.

7-PS-50 & 7-PS-60 4" O.C. splash mounted gooseneck faucet, chrome plated & furnished with aerator.

7-PS-45 Same as above plus 2 Support Brackets (Hardware Included).

7-PS-67 features lever operated drain.

7-PS-68 4" O.C. splash mounted gooseneck faucet with Wrist Handles, chrome plated & furnished with aerator.

CONSTRUCTION:

All TIG welded.

Welded areas blended to match adjacent surfaces and to a satin finish.

Die formed Countertop Edge with a No-Drip offset.

One sheet of stainless steel - No Seams.

MATERIAL:

Heavy gauge type 304 series stainless steel.

Wall mounting bracket is Galvanized and of offset design.

All fittings are brass / chrome plated unless otherwise indicated.

MECHANICAL:

Faucet supply is 1/2" IPS male thread hot and cold.

FOR REPLACEMENT FAUCET, DRAINS AND ACCESSORIES SEE PAGE B-13 & SECTION G

Customer Service Available To Assist You 1-800-645-3166 8:30 am - 8:00 pm E.S.T.
Email Orders To: customer@advancetabco.com. For Smart Fabrication™ Quotes, Email To: smartfab@advancetabco.com or Fax To: 631-586-2933

www.advancetabco.com

NEW YORK	GEORGIA	TEXAS	NEVADA
Fax: (631) 242-6900	Fax: (770) 775-5625	Fax: (972) 932-4795	Fax: (775) 972-1578

DIMENSIONS and SPECIFICATIONS

TOL Overall: ± .500" Interior: ± .250" **FITTINGS SUPPLIED AS SHOWN** **ALL DIMENSIONS ARE TYPICAL**

7-PS-20

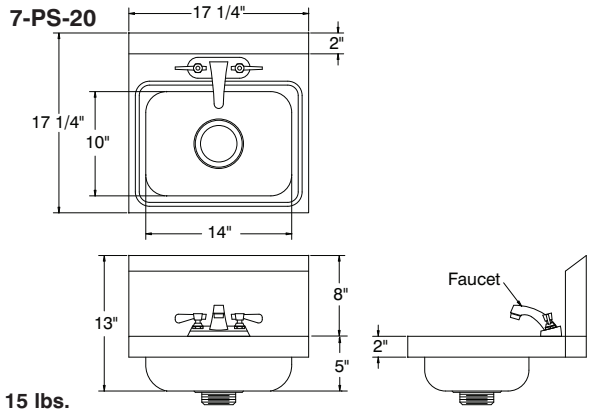

15 lbs.

7-PS-67

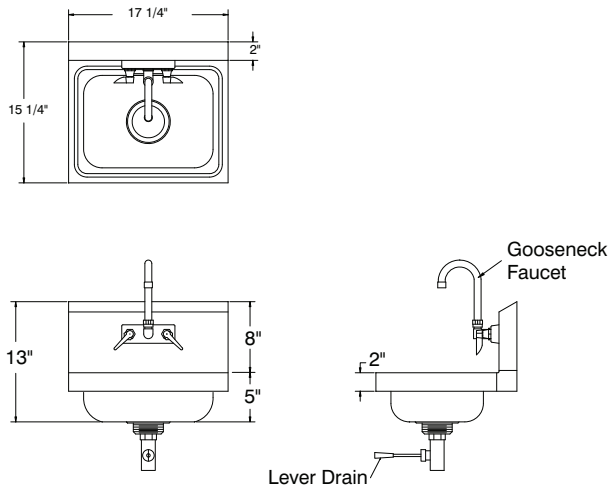

15 lbs.

7-PS-45

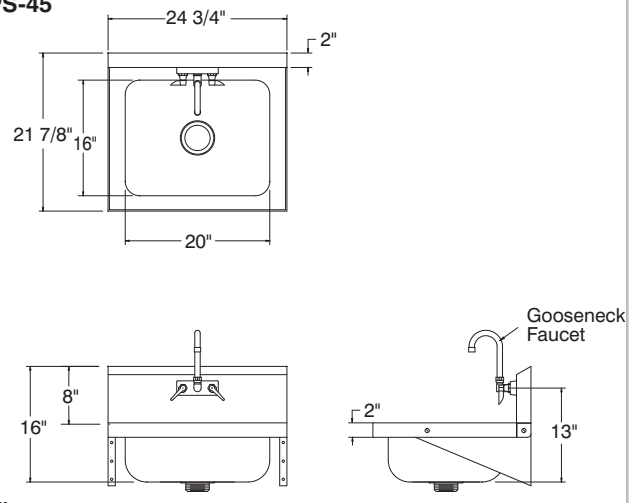

31 lbs.

TOP VIEW FOR:
7-PS-50
7-PS-60
7-PS-68
7-PS-70

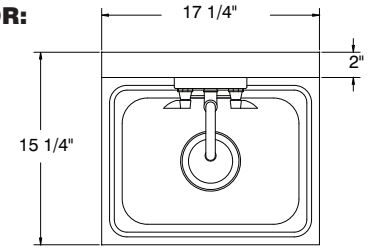

Sink Bowl 10" x 14" x 5"

7-PS-50

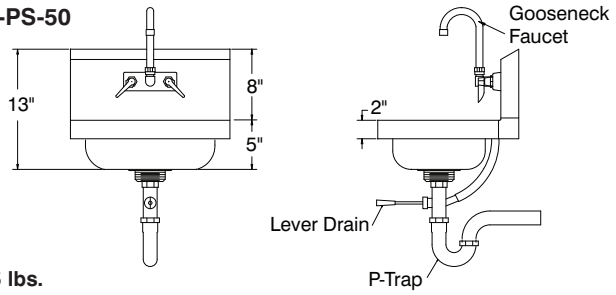

15 lbs.

7-PS-60

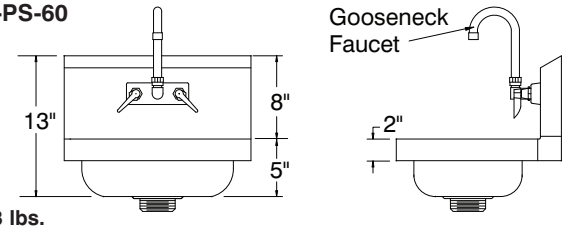

13 lbs.

7-PS-68

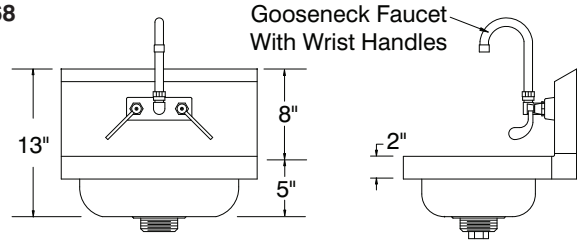

13 lbs.

7-PS-70

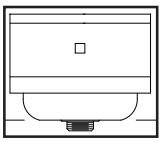

7-PS-71 Same as 7-PS-70 with Single Hole Cutout

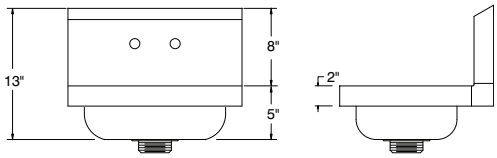

12 lbs.

ADVANCE TABCO
SMART FABRICATION™

ADVANCE TABCO is constantly engaged in a program of improving our products. Therefore, we reserve the right to change specifications without prior notice.

© ADVANCE TABCO, JUNE 2009

Manitowoc

INDIGO®

Indigo™ Series 1106 Ice Cube Machine

Indigo™ Series 1106 Ice Cube Machine

Model: ☐ ID-1106A ☐ IY-1106A ☐ ID-1106W ☐ IY-1106W ☐ ID-1196N ☐ IY-1196N

ENERGY STAR PARTNER

Indigo Series i-1106
Ice Machine on B-570 Bin

Designed for operators who know that ice is critical to their business, the Indigo™ Series ice machine's preventative diagnostics continually monitor itself for reliable ice production. Improvements in cleanability and programmability make your ice machine easy to own and less expensive to operate.

- **New Levels of Performance** – showcasing reductions in energy consumption and improved ambient ice production: up to 9% reduction in energy and up to 20% improvement in ice production.
- **EasyRead Display** – communicates operating status, cleaning reminders, and asset information through a blue illuminated display.
- **Programmable Ice Production** – by On/Off Time, Ice Volume or Bin Level (with accessory bin level control) further improves energy efficiency and savings.
- **Easy to Clean Foodzone** – Hinged front door swings out for easy access. Removable water-trough, distribution tube, curtain, and sensing probes for fast and efficient cleaning. Select components made with AlphaSan® antimicrobial.
- **Intelligent Diagnostics** – provide 24 hour preventative maintenance and diagnostic feedback for trouble free operation.
- **Acoustical Ice Sensing Probe** – for reliable operation in challenging water conditions.
- **DuraTech™ Exterior** – provides superior corrosion resistance. Stainless finish with innovative clear-coat resists fingerprints and dirt.
- Available **LuminIce™ Growth Inhibitor** controls the growth of bacteria and yeast within the foodzone.

COMMERCIAL WARRANTY

ICE MAKER	EVAPORATOR	COMPRESSOR
3 YEAR	5 YEAR	5 YEAR PARTS
PARTS AND LABOR		3 YEAR LABOR

Ice Machine Electric

208-230/60/1 standard
(208-230/60/3 and 230/50/1 also available.)

Minimum circuit ampacity:

Air-cooled:	13 *1ph*	9.8 *3ph*
Water-cooled:	11.9 *1ph*	8.7 *3ph*
Remote:	12.9 *1ph*	9.7 *3ph*

Maximum fuse size:

Air-cooled:	20 *1ph*	15 *3ph*
Water-cooled:	20 *1ph*	15 *3ph*
Remote:	20 *1ph*	15 *3ph*

Specifications

BTU Per Hour:

16,250 (average) 18,600 (peak)

Refrigerant:

R-404A CFC-free

Operating Limits:

- Ambient Temperature Range: 35˚ to 110˚F (1.7˚ to 43.3˚C)
  Water Temperature Range: 35˚ to 90˚F (1.7˚ to 32.2˚C)
- Water Pressure Ice Maker Water In:
  Min. 20 psi (137.9 kPA)
  Max. 80 psi (551.1 kPA)

Ice Shape

Half Dice
3/8" x 1 1/8" x 7/8"
(.95 x 2.86 x 2.22 cm)

Dice
7/8" x 7/8" x 7/8"
(2.22 x 2.22 x 2.22 cm)

CALIFORNIA LOW LEAD QUALIFIED Conforms to NSF 61 Annex G · AHRI CERTIFIED · NSF · c UL US LISTED · CE · AutoQuotes · COMPANY WITH QUALITY SYSTEM

2110 South 26th Street
PO Box 1720
Manitowoc, WI 54221-1720 USA

Tel: 1.920.682.0161
Fax: 1.920.683.7589

www.manitowocice.com

Manitowoc

Manitowoc

Indigo™ Series 1106 Ice Cube Machine

i-1106 on B-570 Storage Bin

Ⓐ Electrical Entrance (2) Options
Ⓑ 3/8" (0.95 cm) F.P.T. Water Condenser Inlet (water-cooled units)
Ⓒ 1/2" (1.27 cm) F.P.T. Water Condenser Outlet (water-cooled units)
Ⓔ 3/8" (0.95 cm) F.P.T. Ice Making Water Inlet
Ⓕ 1/2" (1.27 cm) F.P.T. Ice Making Water Drain
Ⓖ 3/4" (1.91 cm) Bin Drain

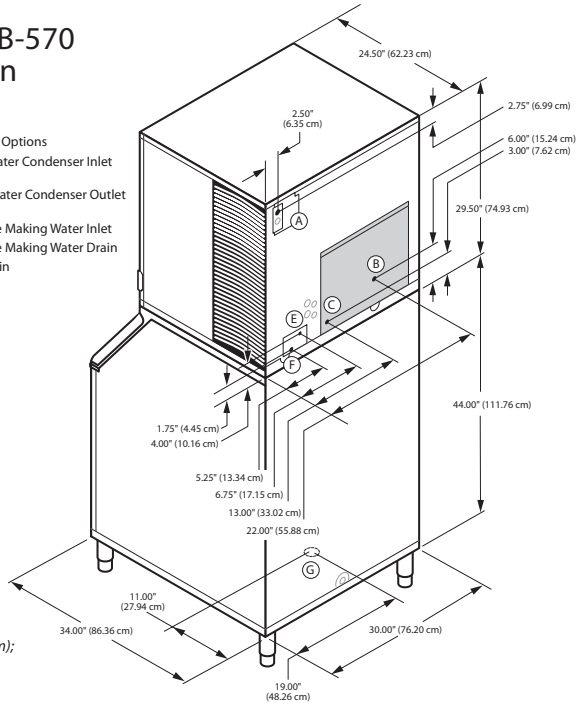

Installation Note
Minimum installation clearance:
Top/sides: 8" (20.32 cm); Back is 5" (12.7 cm)

Space-Saving Designs

	i-1106 B-570	i-1106 B-970*
Height	79.50" 201.93 cm	79.50" 201.93 cm
Width	30.00" 76.20 cm	48.00" 121.92 cm
Depth	34.00" 86.30 cm	34.00" 86.30 cm
Bin Storage	430 lbs. 195 kgs.	710 lbs. 322.2 kgs.

Height includes adjustable bin legs 6.00" to 8.00", (15.24 to 20.32 cm) set at 6.00" (15.24 cm).

**K-00370 bin adapter required.*

Specifications

	Model	Ice Shape	Ice Production 24 Hours 70°Air/ 50°F Water	Ice Production 24 Hours 90°Air/ 70°F Water	Power Usage kWh/100 lbs. @90°Air/70°F 1 Ph	Power Usage kWh/100 lbs. @90°Air/70°F 3 Ph	Water Usage/ 100 lbs. 45.4 kgs. of Ice Potable Water	ENERGY STAR®
AIR-COOLED	ID-1106A	dice	1,141 lbs.	846 lbs.	5.06	5.06	19.8 Gal.	★
			518 kgs.	384 kgs.			75.0 L	
AIR-COOLED	IY-1106A	half-dice	1,200 lbs.	870 lbs.	5.01	5.01	19.8 Gal.	★
			544 kgs.	395 kgs.			75.0 L	
WATER-COOLED	ID-1106W	dice	1,057 lbs.	906 lbs.	4.08	4.08	19.8 Gal.	NA
			479 kgs.	411 kgs.			75.0 L	
WATER-COOLED	IY-1106W	half-dice	1,134 lbs.	965 lbs.	3.90	3.90	19.8 Gal.	NA
			514 kgs.	438 kgs.			75.0 L	
WATER-COOLED	* Water-cooled Condenser Water Usage / 100 lbs. /45.4 kgs. Of Ice: 180 gal/681 L. * Water-cooled models are excluded from ENERGY STAR qualification.							
REMOTE-COOLED	ID-1196N	dice	1,027 lbs.	867 lbs.	4.98	4.98	19.8 Gal.	★
			466 kgs.	393 kgs.			75.0 L	
REMOTE-COOLED	IY-1196N	half-dice	1,066 lbs.	922 lbs.	4.88	4.88	19.8 Gal.	★
			484 kgs.	418 kgs.			75.0 L	

Order ice storage bin separately. Ice storage bin and JC-0995 remote condenser must be ordered separately. Consult remote condenser specification sheet for details.
To order 3 phase add "3" suffix to model # (ID-1002A3).

Accessories

LuminIce™ Growth Inhibitor
reduces yeast and bacteria growth for a cleaner ice machine.

Bin Level Control
Allows ice bin level to be automatically set. Built-in LED light illuminates bin.

Arctic Pure® Water Filters
Reduces sediment and chlorine odors for better tasting ice.

AuCS®
schedules and performs routine ice machine cleaning automatically.

4772D ©2014 Manitowoc 5/14 Continuing product improvement may necessitate change of specifications without notice.

2110 South 26th Street
PO Box 1720
Manitowoc, WI 54221-1720 USA

Tel: 1.920.682.0161
Fax: 1.920.683.7589
www.manitowocice.com

Manitowoc

T&S BRASS AND BRONZE WORKS, INC.

2 Saddleback Cove / P.O. Box 1088
Travelers Rest, SC 29690

REG. #A2601
ISO #9001

Travelers Rest, SC: 800-476-4103 Simi Valley, CA: 800-423-0150 Fax: 864-834-3518 www.tsbrass.com

Model No.
B-0230

Item No.

This Space for Architect/Engineer Approval

Job Name_____Date_____

Model Specified_____ Quantity_____

Customer/Wholesaler_____

Contractor_____

Architect/Engineer_____

ADA Compliant

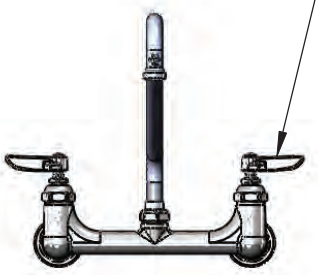

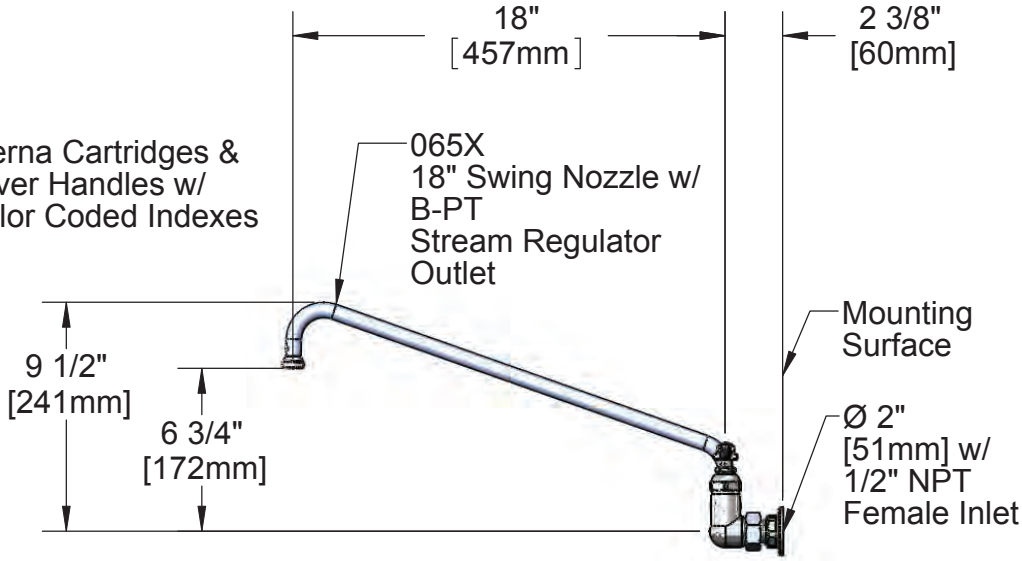

8" c/c
[203mm]
Adjustable from
7 3/4" to 8 1/4"
[197mm to 210mm]

Note: Rough-In Requirement
(2) Ø 1" [25mm] Mounting Holes

Product Specifications:
Double Pantry Faucet w/ Eterna Cartridges, 18" Swivel Nozzle w/ B-PT Stream Regulator Outlet, Lever Handles & 1/2" NPT Female Inlets

Drawn	Checked	Approved
DHL	JRM	JHB
Scale: 1:8		Date: 02/17/11

T&S BRASS AND BRONZE WORKS, INC.

2 Saddleback Cove / P.O. Box 1088
Travelers Rest, SC 29690

REG. #A2601
ISO #9001

Travelers Rest, SC: 800-476-4103 Simi Valley, CA: 800-423-0150 Fax: 864-834-3518 www.tsbrass.com

Model No.
B-0230

Item No.

ITEM NO.	SALES NO.	DESCRIPTION
1	065X	18" Swing Nozzle Assembly w/ B-PT Stream Regulator
2	B-PT	Stream Regulator
3	001048-45	Nozzle Tip Washer
4	000922-45	Lever Handle Screw
5	001661-45	Red Index-HW
6	001638-45	Lever Handle
7	005960-40	Spindle Asm, Eterna "Hot"
8	009538-45	Swivel Washer
9	011429-45	Swivel Sleeves (2)
10	001074-45	O-Ring
11	001660-45	Blue Index-CW
12	005959-40	Spindle Asm. Eterna "Cold"
13	001019-45	Coupling Nut Washer
14	00AA	1/2" NPT Female Inlet Assembly

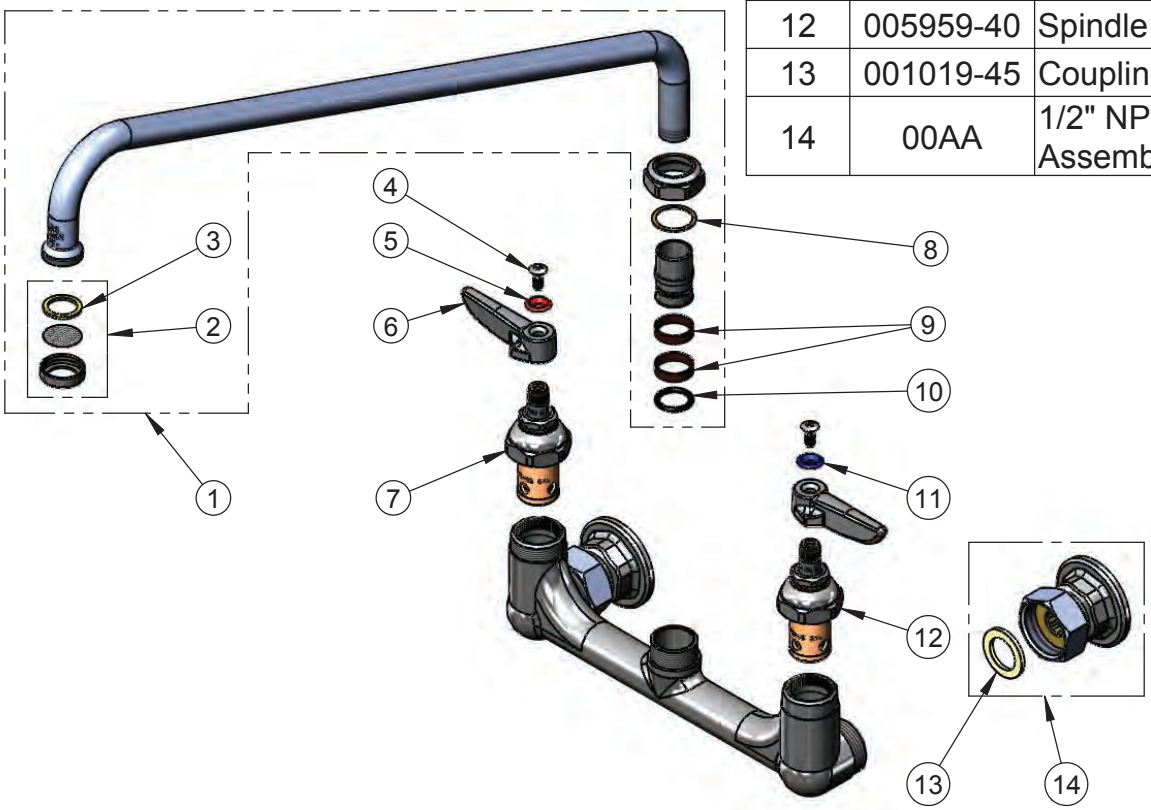

Product Specifications:

Double Pantry Faucet w/ Eterna Cartridges, 18" Swivel Nozzle w/ B-PT Stream Regulator Outlet, Lever Handles & 1/2" NPT Female Inlets

Drawn	Checked	Approved
DHL	JRM	JHB
Scale: NTS		Date: 02/17/11

NSF SINKS

F3L SERIES, Three Compartment with Left Drainboard

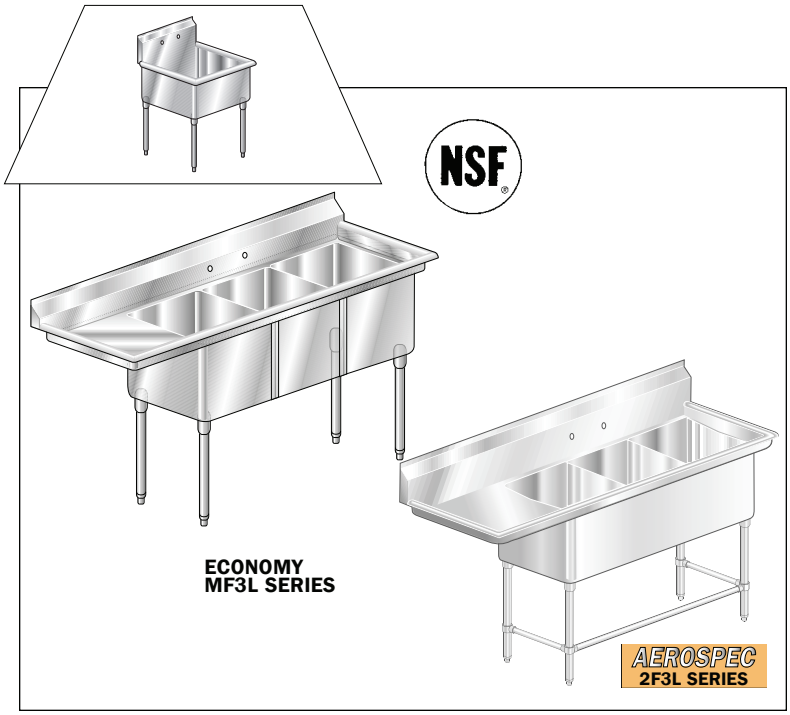

Item#_____Project_____

Quantity	ECONOMY MF3 Model #	DELUX 3F3 Model #	AEROSPEC 2F3 Model #
21" WIDE			
_____	MF3-2116-18L	3F3-2116-18L	2F3-2116-18L
_____	MF3-2116-24L	3F3-2116-24L	2F3-2116-24L
_____	MF3-2116-30L	3F3-2116-30L	2F3-2116-30L
_____	MF3-2116-36L	3F3-2116-36L	2F3-2116-36L
20" WIDE			
_____	MF3-2020-20L	3F3-2020-20L	2F3-2020-20L
_____	MF3-2020-24L	3F3-2020-24L	2F3-2020-24L
_____	MF3-2020-30L	3F3-2020-30L	2F3-2020-30L
_____	MF3-2020-36L	3F3-2020-36L	2F3-2020-36L
24" WIDE			
_____	MF3-2418-18L	3F3-2418-18L	2F3-2418-18L
_____	MF3-2418-24L	3F3-2418-24L	2F3-2418-24L
_____	MF3-2418-30L	3F3-2418-30L	2F3-2418-30L
_____	MF3-2418-36L	3F3-2418-36L	2F3-2418-36L
24" WIDE			
_____	MF3-2424-18L	3F3-2424-18L	2F3-2424-18L
_____	MF3-2424-24L	3F3-2424-24L	2F3-2424-24L
_____	MF3-2424-30L	3F3-2424-30L	2F3-2424-30L
_____	MF3-2424-36L	3F3-2424-36L	2F3-2424-36L
30" WIDE			
_____	MF3-3020-20L	3F3-3020-20L	2F3-3020-20L
_____	MF3-3020-24L	3F3-3020-24L	2F3-3020-24L
_____	MF3-3020-30L	3F3-3020-30L	2F3-3020-30L
_____	MF3-3020-36L	3F3-3020-36L	2F3-3020-36L

MATERIAL

BODY

- MF –16 gauge 304 stainless steel bowl, 430 body.
- 3F –16 gauge 304 stainless steel bowl and body.
- 2F –14 gauge 304 stainless steel bowl and body.

LEGS

- 1⅝" O.D. 16 gauge 304 series stainless steel tubing, complete with 1" adjustable impact resistant white metal feet.

DESIGN FEATURES

- All sinks are fully cartoned.
- Easily assembled.
- Drainboards pitched ¾" for positive drainage.

EXCLUSIVE AERO SAFETY EDGE

- Sink hemmed on the roll and backsplash to eliminate cuts from rough edges.

CONSTRUCTION

- ***Exclusive 14" bowl depth on all models (consultant's spec).***
- ***Custom style fabricated bowl for true gauge integrity.***
- All sinks have a ¾" radius at all intersecting planes (consultant's spec).
- 18 gauge stainless steel wraparound all sink bowl.
- Stainless steel gusset is machine welded 360 deg. to a stainless steel triangular plate.
- Gusset plate is fully welded directly underneath the sink for support.
- Polished to a #4 blended finish.
- All sinks with drainboards 30" or longer equipped with 2 stainless steel 1⅝" O.D. legs with stainless steel gussets and white metal feet.

PLUMBING

- Water supply is ½" hot and cold.
- Faucet holes are 8" o.c. (Faucets not included. See accessories).

AEROSPEC

Includes all of the above and the following:

- Full 10" backsplash instead of standard 7".
- 18 gauge stainless steel strip to cover seams between bowls.
- Stainless steel feet in lieu of white metal.
- Legs have stainless steel crossbracing with aluminum castings at all intersections.

CUSTOM SIZES AVAILABLE

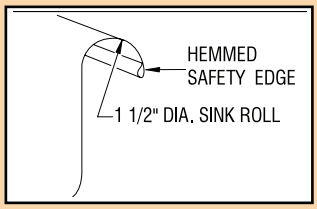

Exclusive Aero Safety Edge

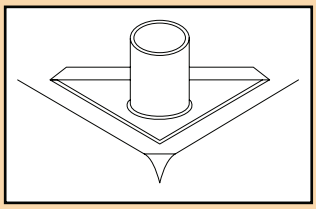

Fully Welded Gusset Assembly

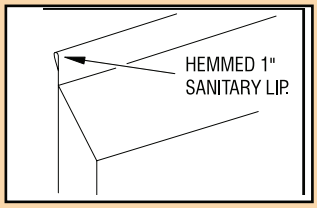

1" Sanitary Lip

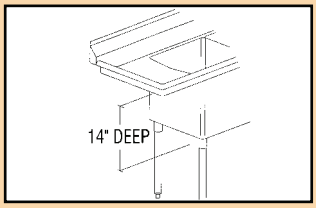

14" Custom-Style Bowl

CONSULTANT'S SPECS AT PRODUCTION PRICES

email - sales@aeromfg.com
AERO MANUFACTURING COMPANY • 310 ALLWOOD ROAD, CLIFTON, NEW JERSEY 07012 • VOICE 973.473.5300 FAX 973.473.3794

© Copyright 2001 Aero Manufacturing Company, Inc. Specifications subject to change without notice.

DIMENSIONAL SPECIFICATIONS

F3L SERIES, NSF Sinks, Three Compartment, Left Drainboard

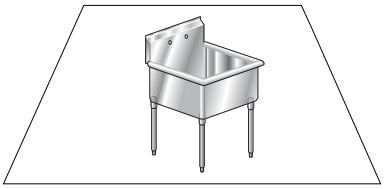

- Supplied with stainless steel drain basket and strainer.

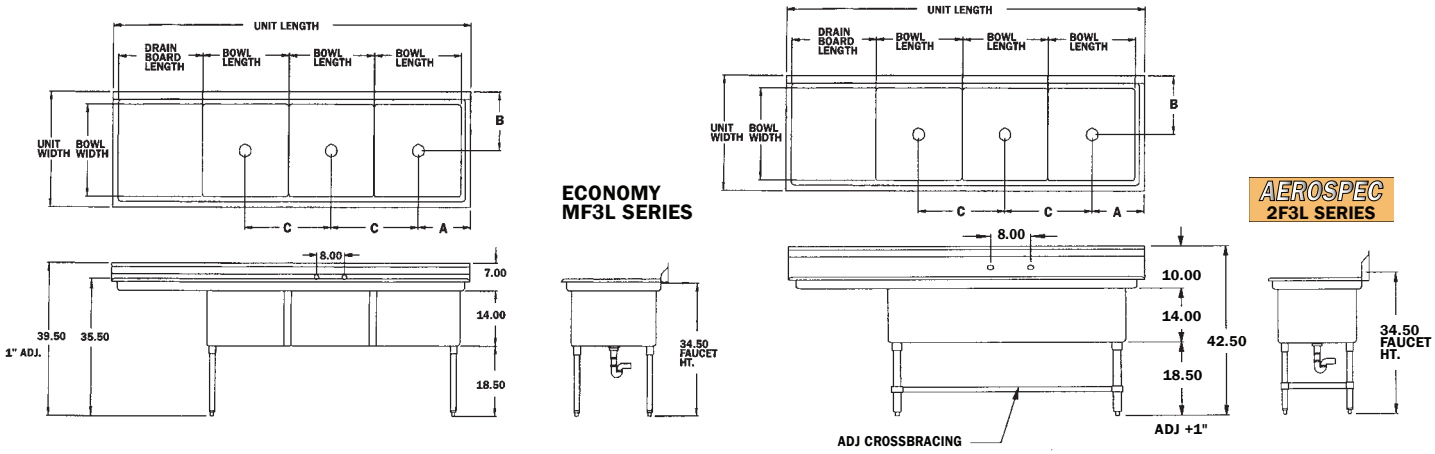

BOWL Width	BOWL Length	UNIT Width	UNIT Length	DRAIN BOARD Length	A Drain	B Drain	C Drain	ECONOMY MF3 Model #	DELUX 3F3 Model #	AEROSPEC 2F3 Model #	Ship Weight	Cubic Feet	Sets, Faucet Holes
21" WIDE													
21	16	27	70.25	18	10.75	13.75	16	MF3-2116-18L	3F3-2116-18L	2F3-2116-18L	140	23	ONE
21	16	27	76.25	24	10.75	13.75	16	MF3-2116-24L	3F3-2116-24L	2F3-2116-24L	145	25	ONE
21	16	27	82.25	30	10.75	13.75	16	MF3-2116-30L	3F3-2116-30L	2F3-2116-30L	150	27	ONE
21	16	27	88.25	36	10.75	13.75	16	MF3-2116-36L	3F3-2116-36L	2F3-2116-36L	155	29	ONE
20" WIDE													
20	20	26	84.25	20	13.75	12.75	20	MF3-2020-20L	3F3-2020-20L	2F3-2020-20L	172	26	TWO
20	20	26	88.25	24	13.75	12.75	20	MF3-2020-24L	3F3-2020-24L	2F3-2020-24L	177	28	TWO
20	20	26	94.25	30	13.75	12.75	20	MF3-2020-30L	3F3-2020-30L	2F3-2020-30L	182	29	TWO
20	20	26	100.25	36	13.75	12.75	20	MF3-2020-36L	3F3-2020-36L	2F3-2020-36L	187	31	TWO
24" WIDE													
24	18	30	76.25	18	11.75	13.75	18	MF3-2418-18L	3F3-2418-18L	2F3-2418-18L	150	25	ONE
24	18	30	82.25	24	11.75	13.75	18	MF3-2418-24L	3F3-2418-24L	2F3-2418-24L	155	27	ONE
24	18	30	88.25	30	11.75	13.75	18	MF3-2418-30L	3F3-2418-30L	2F3-2418-30L	160	29	ONE
24	18	30	94.25	36	11.75	13.75	18	MF3-2418-36L	3F3-2418-36L	2F3-2418-36L	165	31	ONE
24" WIDE													
24	24	30	94.25	18	14.75	15.25	24	MF3-2424-18L	3F3-2424-18L	2F3-2424-18L	195	34	TWO
24	24	30	100.25	24	14.75	15.25	24	MF3-2424-24L	3F3-2424-24L	2F3-2424-24L	200	37	TWO
24	24	30	106.25	30	14.75	15.25	24	MF3-2424-30L	3F3-2424-30L	2F3-2424-30L	205	39	TWO
24	24	30	112.25	36	14.75	15.25	24	MF3-2424-36L	3F3-2424-36L	2F3-2424-36L	210	41	TWO
30" WIDE													
30	20	36	84.25	20	12.75	18.25	20	MF3-3020-20L	3F3-3020-20L	2F3-3020-20L	205	36	TWO
30	20	36	88.25	24	12.75	18.25	20	MF3-3020-24L	3F3-3020-24L	2F3-3020-24L	210	39	TWO
30	20	36	94.25	30	12.75	18.25	20	MF3-3020-30L	3F3-3020-30L	2F3-3020-30L	215	41	TWO
30	20	36	100.25	36	12.75	18.25	20	MF3-3020-36L	3F3-3020-36L	2F3-3020-36L	220	44	TWO

All dimensions are typical (tol. ±½"). • For Accessories and Options see pages FS-7A, FS-7B.

email - sales@aeromfg.com
AERO MANUFACTURING COMPANY • 310 ALLWOOD ROAD, CLIFTON, NEW JERSEY 07012 • VOICE 973.473.5300 FAX 973.473.3794

© Copyright 2001 Aero Manufacturing Company, Inc. Specifications subject to change without notice.

American Standard
Style That Works Better

EXPOSED YOKE WALL-MOUNT UTILITY FAUCET
WITH VACUUM BREAKER

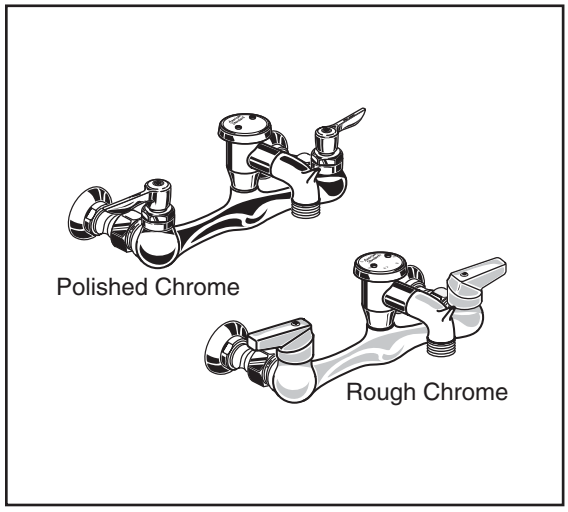

MODEL NUMBER:

❑ **8340.243 Exposed Yoke Wall-Mount Utility Faucet**
Vacuum breaker. Metal Lever handles. 1/2" NPT female inlets.

MS-1

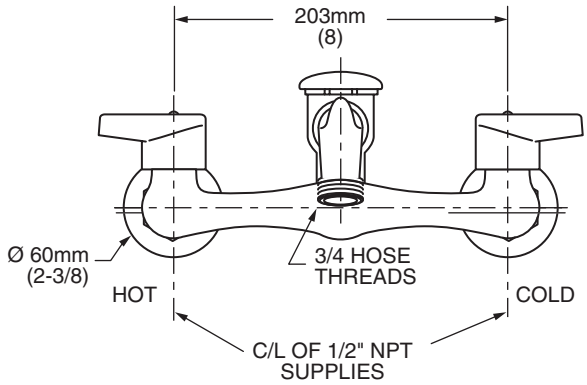

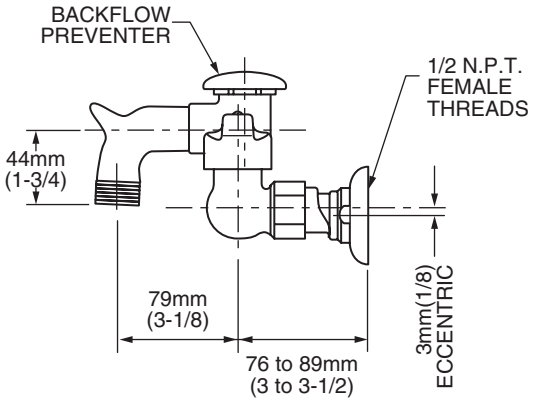

GENERAL DESCRIPTION:

Cast brass body. Metal lever handles with hot and cold indicators. 1/4 turn ceramic disc valve cartridges that are reversible for use on both "hot" and "cold" sides. Vacuum breaker prevents back flow. Spout with bucket hook and threaded hose end. 1/2" female inlets on 8" (203mm) centers.

PRODUCT FEATURES:

Cast Brass Construction: Durable - Excellent in high use applications.

Ceramic Disc Valve Cartridges: Assure a lifetime of drip-free performance.

Vacuum Breaker: Prevents back flow.

Choice of Finishes: Available in Polished or Rough Chrome.

SUGGESTED SPECIFICATION

Exposed yoke wall-mount utility faucet shall feature a cast brass body and spout with bucket hook and metal lever handles. Shall feature a vacuum breaker. Shall also feature 1/4 turn washerless ceramic disc valve cartridges. Fitting shall be American Standard Model # 8340.243.___

© 2008 AS America Inc.

American Standard
Style That Works Better

EXPOSED YOKE WALL-MOUNT UTILITY FAUCET
WITH VACUUM BREAKER

CODES AND STANDARDS

These products meet or exceed the following codes and standards:

ASME A112.18.1
CSA B 125
ASSE 1001
ANSI A117.1

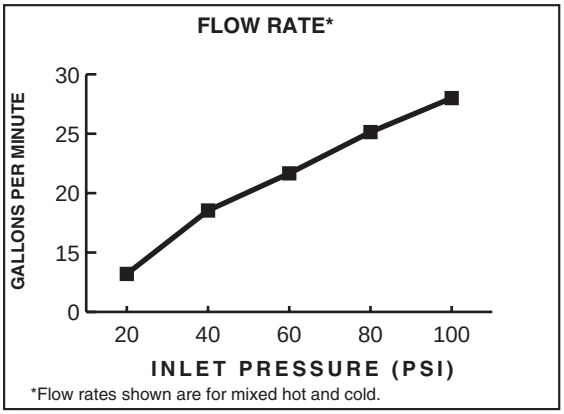

Product Number	Description	Finish Options	
		Polished Chrome 002	Rough Chrome 004
8340.243	Exposed yoke wall-mount utility faucet. Vacuum breaker.		

Meets the American Disabilities Act Guidelines and **ANSI A117.1** Requirements for the physically challenged.

© 2008 AS America Inc.

Z1996-24 MOP SERVICE BASIN 24 x 24 [610 x 610]

TAG _____

Dimensional Data (inches and [mm]) are Subject to Manufacturing Tolerances and Change Without Notice

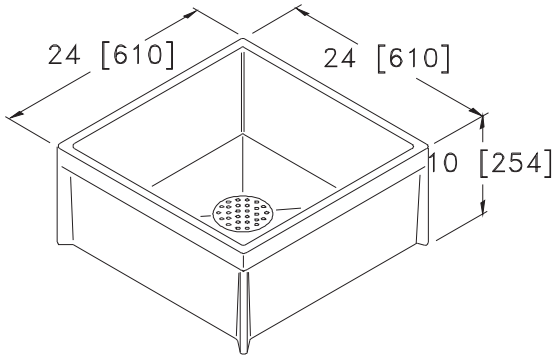

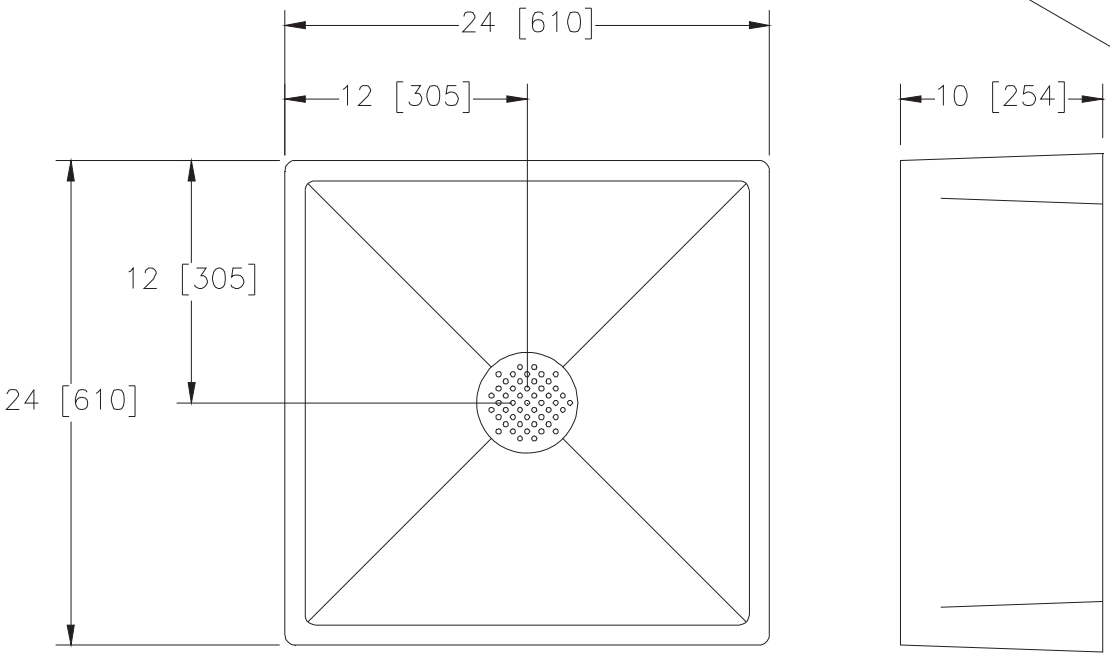

Product	Mop Basin Size	Approx. Wt. Lbs. [kg]
__Z1996-24	24 x 24 x 10 [610 x 610 x 254]	50 [23]

ENGINEERING SPECIFICATION: Z1996-24
Mop Service Basin 24 x 24 x 10 [610 x 610 x 254] Molded high density composite basin, PVC drain body, stainless steel strainer and 3 [76] gasketed outlet connection. Certifications: Meets ANSI Z124.6, CSA listed,and IAPMO listed under file # 3561.

OPTIONS (Check/specify appropriate options)

SUFFIXES

____ -AW White Body
____ -BS Stainless Steel Bumper Guard
____ -BV Vinyl Bumper Guard
____ -HH Hose and Hose Bracket
____ -MH Mop Hanger
____ -NHG PVC Drain Gasket for No-Hub Pipe
____ -PRP Pipe Reducer for PVC Drain
____ -PRS Pipe Reducer for Stainless Steel Drain
____ -SDL Stainless Steel Drain with Dome Strainer, Lint Basket and Locking Nut
____ -SF Service Faucet
____ -WG Wall Guard #20 Gage Type 304 Stainless Steel (2 Panels-Indicate Size)

ZURN INDUSTRIES, LLC ♦ SPECIFICATION DRAINAGE OPERATION ♦ 1801 Pittsburgh Ave. ♦ Erie, PA 16514
Phone: 814\455-0921 ♦ Fax: 814\454-7929 ♦ World Wide Web: www.zurn.com
In Canada: ZURN INDUSTRIES LIMITED ♦ 3544 Nashua Drive ♦ Mississauga, Ontario L4V1L2 ♦ Phone: 905\405-8272 Fax: 905\405-1292

Rev. K Date: 03/06/13 C.N. No. 128895
Prod./Dwg. No. Z1996-24

4700 W. 160th St.
Cleveland, Ohio 44135
Ph: (800) 321-9532
Fax: (800) 321-9535
www.oatey.com

SUBMITTAL SPECIFICATION

The Eliminator® Washing Machine Outlet Boxes

Engineering Specification: Oatey Eliminator® Drain washing machine outlet boxes can be used in commercial or residential applications which require supply valves and waste drain recessed into the wall and an additional drain port is needed. Allows single connection to drain washing machine hose and AC condensate, water softener discharge and/or humidifier lines. Right Outlet Eliminator® box allows for drain connection on right, while Left Outlet Eliminator® allows for drain connection on the left side of the box. Available water hammer arrestor option provides water pressure shock arrestors required for installation on supply lines to quick closing valves.

Job Reference

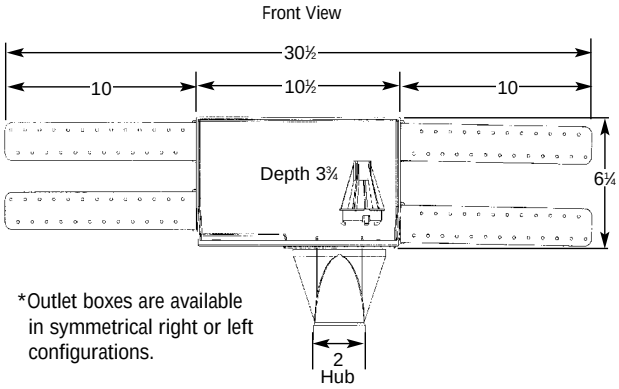

*Outlet boxes are available in symmetrical right or left configurations.

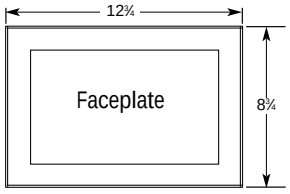

(All dimensions in inches)

- 2" drain opening fits PVC or ABS Sch. 40 DWV pipe
- All washing machine outlet boxes are shipped 12 per carton
- Box made of high impact polystyrene
- Single drain with two ports designed to accomodate additional drain lines
- Snap-on faceplate frame accommodates up to 1" drywall
- Snap-in clamp stabilizes additional lines

Right Outlet Eliminator®

✓	Prod. No	Description
	38630	1/4 Turn Brass Ball Valves - Copper Sweat - Standard Pack
	38631	1/4 Turn Brass Ball Valves - Copper Sweat - Standard Pack- Top Mount
	38632	1/4 Turn Brass Ball Valves - Copper Sweat - Contractor Pack
	38633	1/4 Turn Brass Ball Valves - ASTM F1807 PEX - Standard Pack
	38634	Single Lever Brass Ball Valve - Copper Sweat- Standard Pack
	38635	Single Lever Brass Ball Valve - ASTM F1807 PEX - Standard Pack
	38636	1/4 Turn Brass Ball Valves - ASTM F1807 PEX- Standard Pack - Top Mount
	38637	1/4 Turn Brass Ball Valves CPVC - Standard Pack
	38638	Single Lever Brass Ball Valve Copper Sweat - Standard Pack - Top Mount
	38639	Single Lever Brass Ball Valve Copper Sweat- Contractor Pack- Floating Valve
	38640	Plain Box - No Valves- Contractor Pack
	38641	1/4 Turn Brass Ball Valves- ASTM F1974 PEX - Contractor Pack
	38642	1/4 Turn Brass Hammer Ball Valves- Copper Sweat - Standard Pack
	38644	1/4 Turn Brass Ball Valves - ASTM F1960 PEX - Contractor Pack
	38645	1/4 Turn Brass Ball Valves - ASTM F1960 PEX - Standard Pack - Top Mount
	38651	Single Lever Brass Ball Valve- ASTM F1960 PEX - Standard Pack
	38652	1/4 Turn Brass Hammer Ball Valves-CPVC-Standard Pack
	38655	1/4 Turn Brass Hammer Ball Valves- Copper Sweat- Contractor Pack - Top Mount
	38656	1/4 Turn Brass Hammer Ball Valves- CPVC - Standard Pack - Top Mount
	38657	1/4 Turn Brass Hammer Ball Valves- ASTM F1807 PEX - Contractor Pack - Top Mount
	38658	1/4 Turn Brass Hammer Ball Valves- ASTM F1960 PEX - Contractor Pack - Top Mount
	38659	1/4 Turn Brass Hammer Ball Valves- ASTM F1974 PEX - Contractor Pack - Top Mount
	38675	1/4 Turn Brass Hammer Ball Valves- F2080 PEX - Standard Pack
	38677	1/4 Turn Brass Hammer Ball Valves- 3/8" PEX - Standard Pack
	38678	1/4 Turn Brass Hammer Ball Valves - F2080 PEX
	38679	Single Lever Brass Hammer Ball Valve - F2080 PEX

Left Outlet Eliminator®

Prod. No	Description
38520	1/4 Turn Brass Ball Valves- Copper Sweat - Standard Pack
38521	1/4 Turn Brass Ball Valves- Copper Sweat - Contractor Pack
38522	Single Lever Brass Ball Valve - Copper Sweat- Standard Pack
38523	1/4 Turn Brass Ball Valves - CPVC - Standard Pack
38524	1/4 Turn Brass Hammer Ball Valves - Copper Sweat - Standard Pack
38525	1/4 Turn Brass Ball Valves - ASTM F1690 PEX - Standard Pack
38526	1/4 Turn Brass Ball Valves - ASTM F1690 PEX - Standard Pack - Top Mount

U.S. Patent # 6,148,850

Water Hammer Arrestors Meet ASSE Standard 1010. Valves meet ASME A112.18.1

Data is subject to manufacturing tolerances.

Visit www.oatey.com for updates.

10/07

	Accessories	
	38646	Plastic Steeple Clamp
	38649	Plastic Faceplate for Eliminator
	38768	Plastic Brackets, 4” long, for plastic boxes
	38648	Plastic Brackets, 12” long, for plastic boxes