FOR UTILITY LOCATIONS CONTACT "ONE CALL" AT 811 AT LEAST 48 HOURS PRIOR TO CONSTRUCTION

Know what's below. Call before you dig.

SD PROFILES:
HORZ. SCALE: 1"=50'
VERT. SCALE: 1"=5'

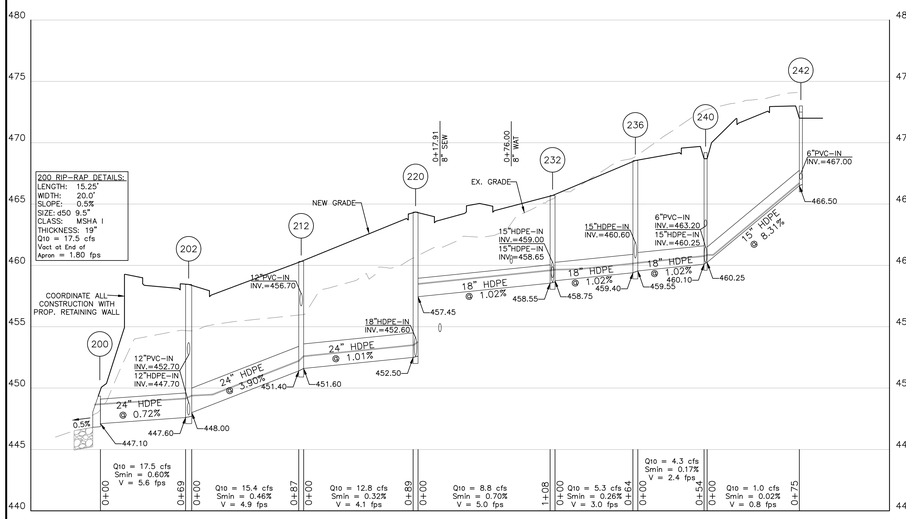

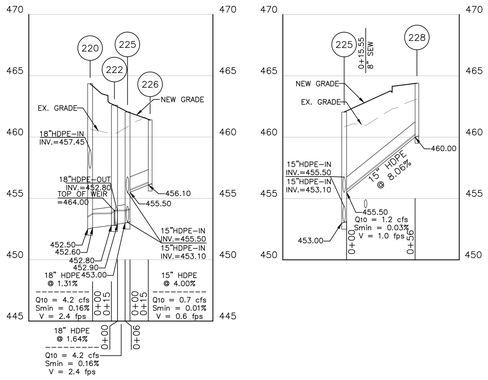

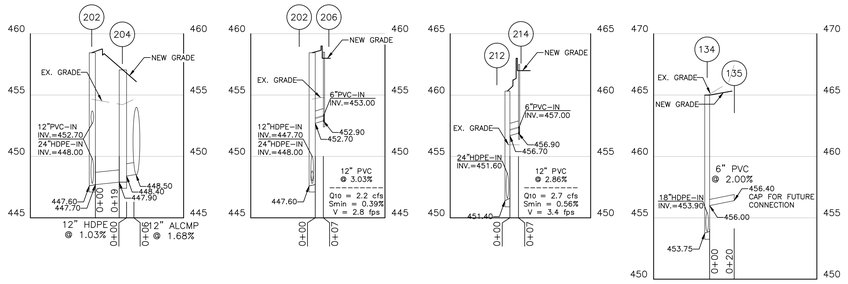

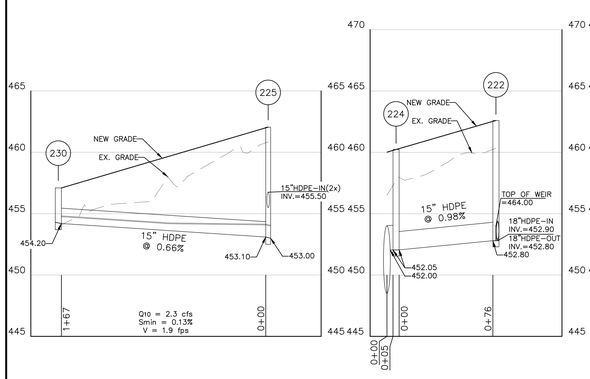

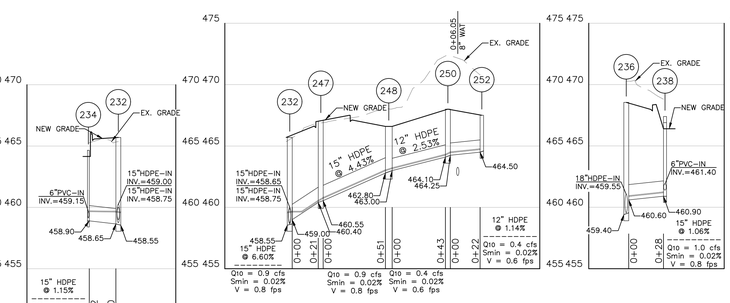

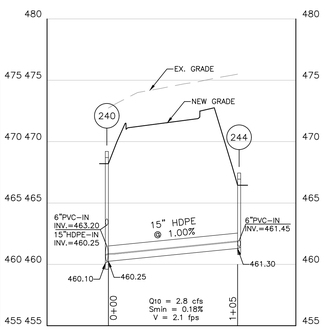

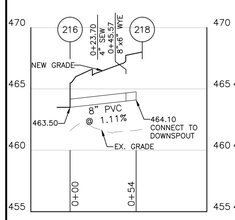

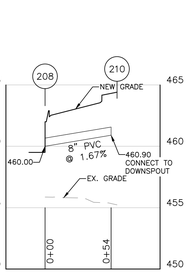

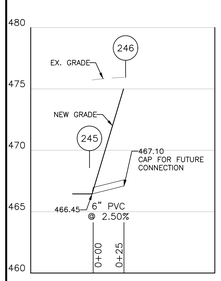

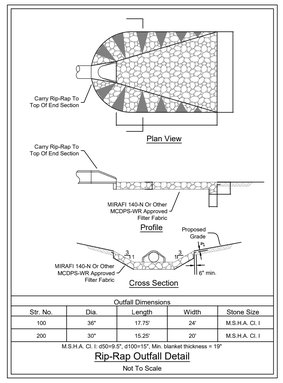

Outfall Dimensions				
Str. No.	Dia.	Length	Width	Stone Size
100	36"	17.75'	24'	M.S.H.A. Cl. I
200	30"	15.25'	20'	M.S.H.A. Cl. I

M.S.H.A. Cl. I: d50=9.5", d100=15", Min. blanket thickness = 19"

Rip-Rap Outfall Detail

Not To Scale

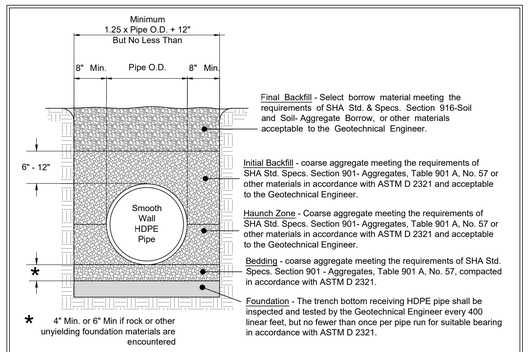

HDPE PIPE BEDDING DETAIL FOR PRIVATE STORM DRAINAGE SYSTEMS
NO SCALE

PRIVATE MAINTENANCE PIPE SUMMARY - TO BE MAINTAINED BY MONTGOMERY COUNTY BOARD OF EDUCATION

SIZE	TYPE	LENGTH (ft)
12"	ALCMP	14
18"	ALCMP	9
24"	ALCMP	5
2"	PVC, SCH. 40	169
3"	PVC, SCH. 40	102
4"	PVC, SCH. 40	192
6"	PVC, SCH. 40	136
8"	PVC, SCH. 40	108
12"	PVC, SCH. 40	74
12"	HDPE ST, IB	553
15"	HDPE ST, IB	912
18"	HDPE ST, IB	751
24"	HDPE ST, IB	280
30"	HDPE ST, IB	40

PRIVATE PIPE SUMMARY

FROM	TO	SIZE	TYPE	LENGTH (FT)
246	245	12"	PVC	25
244	240	15"	HDPE	105
242	240	15"	HDPE	75
240	236	18"	HDPE	54
238	236	15"	HDPE	28
236	232	18"	HDPE	64
234	232	15"	HDPE	22
252	250	12"	HDPE	22
250	248	12"	HDPE	43
248	247	15"	HDPE	51
247	232	15"	HDPE	21
232	220	18"	HDPE	108
230	225	15"	HDPE	167
228	225	15"	HDPE	56
226	225	15"	HDPE	15
225	222	18"	HDPE	6
222	224	18"	HDPE	76
224	ARRAY	24"	CMP	5
222	220	18"	HDPE	15
220	212	24"	HDPE	89
218	216	8"	PVC	54
214	212	12"	PVC	7
212	202	24"	HDPE	87
210	208	8"	PVC	54
ARRAY	204	12"	CMP	6
204	202	12"	HDPE	19
206	202	12"	PVC	7
202	200	24"	HDPE	69
130C	130B	12"	HDPE	49
130B	130A	12"	HDPE	58
130A	130	15"	HDPE	74
130	128	15"	HDPE	65
128	126	18"	HDPE	36
126	122	18"	HDPE	85
122	124	18"	HDPE	7
124	ARRAY	18"	CMP	5
122	120	18"	HDPE	121
ARRAY	132	12"	CMP	4
132	120	12"	HDPE	36
164	162	15"	HDPE	71
162	155	15"	HDPE	56
158	155	12"	HDPE	7
160	155	15"	HDPE	57
155	154	18"	HDPE	10
154	156	18"	HDPE	4
156	ARRAY	18"	CMP	4
154	136	18"	HDPE	98
ARRAY	138	12"	CMP	4
138	136	12"	HDPE	16
150	147	12"	HDPE	42
147	145	12"	HDPE	88
145	140	12"	HDPE	23
146	140	15"	HDPE	11
140	136	15"	HDPE	38
136	134	18"	HDPE	54
135	134	6"	PVC	20
134	120	18"	HDPE	13
120	102	24"	HDPE	35
102	100	30"	HDPE	40

PRIVATE STRUCTURE SCHEDULE - MISCELLANEOUS STRUCTURES - TO BE MAINTAINED BY MONTGOMERY COUNTY BOARD OF EDUCATION

No.	Type & Standard	Inside Dimensions or Diameter	Elev.	Notes
245	12" Metal End Section per MD-370.01	12" Dia.	Invert at End of E.S. to Meet Top of Planting Media	------
244	Precast "E" Inlet per MC-504.01	2.5' x 2.5'	Slot = 466.95	One Slot SE Side
242	Precast "E" Inlet per MC-504.01	2.5' x 2.5'	Slot = 472.50	One Slot NE Side
240	Precast "E" Inlet per MC-504.01	2.5' x 2.5'	Slot = 468.70	One Slot SW Side
238	Precast "E" Inlet per MC-504.01	2.5' x 2.5'	Slot = 466.90	One Slot SE Side
236	Precast 48" Diameter Manhole per MD-384.01	4.0' Dia.	Top of MH = 468.55	See MH Top note at Bottom
234	18" Nyloplast Drain Basin	18" Dia.	Rim = 464.65	Provide 18" Dome Grate
232	Precast 48" Diameter Manhole per MD-384.01	4.0' Dia.	Top of MH = 465.70	See MH Top note at Bottom
252	Precast Single "WR" Inlet per MD-374.23	2.76' x 2.6'	Top of Grate = 467.50	Provide 8 Inch Concrete Border around Grate
250	Precast 48" Diameter Manhole per MD-384.01	4.0' Dia.	Top of MH = 468.00	See MH Top note at Bottom
248	Precast "WR" Inlet per MD-374.21	5'-6" x 3'-5"	Throat / Top of Grate at Face of Curb = 466.60	Provide 8 Inch Concrete Border around Grate
247	Precast 48" Diameter Manhole per MD-384.01	4.0' Dia.	Top of MH = 466.90	See MH Top note at Bottom
230	Precast Shallow "A5" Inlet per MC-501.01	2.5' x 5.0'	RT TC = 457.10 LT TC = 457.10	Open Box
228	Precast 36" CT "A5" Inlet per MC-501.01	36" Dia.	RT TC = 464.40 LT TC = 464.40	------
226	Precast 36" RT "A5" Inlet per MC-501.01	36" Dia.	RT TC = 461.40 LT TC = 461.75	------
225	Precast 48" Diameter Manhole per MD-384.01	4.0' Dia.	Top of MH = 462.05	See MH Top note at Bottom
222	Precast 60" Diameter Manhole per MD-384.03	5.0' Dia.	Top of MH = 462.60	Provide 8" Wide Concrete Weir Wall Top of Wall = 454.00
224	Contech CDS2020-5-C	5.0' Dia.	Top of MH = 460.23	------
214	18" Nyloplast Drain Basin	18" Dia.	Rim = 462.50	Provide 18" Dome Grate
212	Precast 48" Diameter Manhole per MD-384.01	4.0' Dia.	Top of MH = 460.33	See MH Top note at Bottom
206	18" Nyloplast Drain Basin	18" Dia.	Rim = 458.50	Provide 18" Dome Grate
204	Contech SFMH72	6.0' Dia.	Top of MH = 457.05	6 Stormfilter Cartridges
202	Precast 60" Diameter Manhole per MD-384.03	5.0' Dia.	Top of MH = 458.45	See MH Top note at Bottom
200	30" Concrete End Section per MD-368.01	24" HDPE See "Notes"	Pipe End Invert = 447.10	Place 0.5 foot ± of end of 24" HDPE into 30" opening at End Section and carefully grout into place before backfilling
130C	15" Nyloplast Drain Basin	15" Dia.	Rim = 470.50	Provide 15" Dome Grate
130B	15" Nyloplast Drain Basin	15" Dia.	Rim = 470.50	Provide 15" Dome Grate
130A	18" Nyloplast Drain Basin	18" Dia.	Rim = 470.40	Provide 18" Dome Grate
130	Precast 48" Diameter Manhole per MD-384.01	4.0' Dia.	Top of MH = 469.56	See MH Top note at Bottom
128	Precast 48" Diameter Manhole per MD-384.01	4.0' Dia.	Top of MH = 469.43	See MH Top note at Bottom
126	Precast 48" Diameter Manhole per MD-384.01	4.0' Dia.	Top of MH = 468.66	See MH Top note at Bottom
122	Precast 60" Diameter Manhole per MD-384.03	5.0' Dia.	Top of MH = 469.75	Provide 8" Wide Concrete Weir Wall Top of Wall = 462.20
124	Contech CDS2020-5-C	5.0' Dia.	Top of MH = 467.60	------
120	Precast 72" Diameter Manhole per MD-384.05	6.0' Dia.	Top of MH = 465.00	See MH Top note at Bottom
132	Contech SFMH72	6.0' Dia.	Top of MH = 466.20	6 Stormfilter Cartridges
164	Precast Yard Inlet per MD-361.02	2.0' x 2.0'	Top of Grate = 466.70	------
162	Precast Yard Inlet per MD-361.02	2.0' x 2.0'	Top of Grate = 466.50	------
160	Precast Yard Inlet per MD-361.02	2.0' x 2.0'	Top of Grate = 466.80	------
155	Precast 60" Diameter Manhole per MD-384.03	5.0' Dia.	Top of MH = 468.17	See MH Top note at Bottom
154	Precast 60" Diameter Manhole per MD-384.03	5.0' Dia.	Top of MH = 469.75	Provide 8" Wide Concrete Weir Wall Top of Wall = 462.20. See Note at Bottom
156	Contech CDS2020-5-C	5.0' Dia.	Top of MH = 468.05	------
138	Contech SFMH72	6.0' Dia.	Top of MH = 466.20	5 Stormfilter Cartridges
136	Precast 4' x 8' MH Base per MD-374.51-01& 48" Precast MH Riser per MD-384.01	4.0' x 8.0' Base 4.0' Dia. MH Riser	Top of 5.42' x 9.42' Top Slab = 459.0± Top of MH = 466.60	Provide Granite Block Bottom Provide H20 Loading Top Slab for 4'x8' MH Base. See MH Top Note at Bottom
150	Precast Yard Inlet per MD-361.02	2.0' x 2.0'	Top of Grate = 464.00	------
147	15" Nyloplast Drain Basin	15" Dia.	Rim = 466.86	Provide 15" Solid Top Grate
145	15" Nyloplast Drain Basin	15" Dia.	Rim = 465.54	Provide 15" Solid Top Grate
146	Precast "E" Inlet per MC-504.01	2.5' x 2.5'	Slot = 463.50	One Slot S Side
140	Precast "E" Inlet per MC-504.01	2.5' x 2.5'	Slot = 463.50	One Slot N Side
151	15" Nyloplast Drain Basin	15" Dia.	Rim = 468.05	Provide 15" Solid Top Grate
149	15" Nyloplast Drain Basin	15" Dia.	Rim = 466.24	Provide 15" Solid Top Grate
148	12" Metal End Section per MD-370.01	12" Dia.	Invert at End of E.S. to Meet Top of Planting Media	------
142	12" Metal End Section per MD-370.01	12" Dia.	Invert at End of E.S. to Meet Top of Planting Media	------
134	Precast 48" Diameter Manhole per MD-384.01	4.0' Dia.	Top of MH = 465.00	See MH Top note at Bottom
102	Precast 60" Diameter Manhole per MD-384.03	5.0' Dia.	Top of MH = 466.00 Adjust as necessary to meet proposed path.	Contractor to confirm size and Invert of Existing Incoming Pipe before ordering Structure for Fabrication. See MH Top note at Bottom
100	36" Concrete End Section per MD-368.01	30" HDPE See "Notes"	Pipe End Invert = 452.40	Place 0.5 foot ± of end of 30" HDPE into 36" opening at End Section and carefully grout into place before backfilling
112	18" Nyloplast Drain Basin	18" Dia.	Rim = 476.50	Provide 18" Dome Grate - Provide Berm as shown on Plan and Profile
110	Precast 48" Diameter Manhole per MD-384.01	4.0' Dia.		Precast Doghouse May Be Used. See MH Top Note at Bottom
107	Precast Single "WR" Inlet per MD-374.23	2.76' x 2.6'	Top of Grate = 476.80 Interp. 15"Inv In = 469.99 15"Inv Out = 469.97	Provide 8 Inch Concrete Border around Grate. Precaster - Allow for more adjustment around existing RCP than usual.

Precaster and Contractor must refer to the Approved Soil Erosion, Sediment Control and SWM Plans for any Temporary SESC Pipes and/or SWM Pipes and structures.

Typical: All Manholes to Have Montgomery County Standard Frame & Covers

SM#285890

SC024SDPROFILE | SC#286335

STORM DRAIN PROFILES AND SCHEDULES

ARCHITECT

SMOLEN • EMR • ILKOVITCH ARCHITECTS
9211 CORPORATE BLVD, SUITE 340
ROCKVILLE, MD 20850
301-770-0177(P) 301-330-3224(F)

CIVIL
MACRIS, HENDRICKS & GLASCOCK
9220 WIGHTMAN RD, SUITE 120
MONTGOMERY VILLAGE, MD 20886
301-670-0840(P)

STRUCTURAL
COMPREHENSIVE STRUCTURAL SOLUTIONS
9220 WIGHTMAN RD, SUITE 120
MONTGOMERY VILLAGE, MD 20886
240-200-5599(P)

MECH./ELECTRICAL/PLUMBING
JAMES POSEY ASSOCIATES
11155 RED RUN BLVD, SUITE 310
BALTIMORE, MD 21117
410-265-6100(P)

KITCHEN
NYIKOS-GARCIA FOODSERVICE DESIGN, INC
18219-A FLOWER HILL WAY
GAITHERSBURG, MD 20879
240-683-9530 (P)

SUSTAINABILITY
DOO CONSULTING, LLC
531 PICCADILLY ROAD
BALTIMORE, MD 21204
443-653-3792 (P)

CONSTRUCTION MANAGER
SKANSKA USA BUILDING INC.
700 KING FARM BLVD, SUITE 200
ROCKVILLE, MD 20850
301-795-3100 (P)

Professional Certification. I hereby certify that these documents were prepared or approved by me, and that I am a duly licensed Professional Engineer under the laws of the State of Maryland, License No.: 16905, Expiration Date: 4.21.2022.

PROFESSIONAL SEAL:

PRINTS ISSUED

NO:	DESCRIPTION:	DATE:
1	BID DOCUMENTS	10/21/2020
A	ADDENDUM #2	11/25/2020
B	ADDENDUM #3	12/01/2020
C	ADDENDUM #4	12/03/2020
5		

TAX MAP FT62 WSSC 224NW09
PLAT 12762
9TH ELECTION DISTRICT
CITY OF GAITHERSBURG, MD

GAITHERSBURG CLUSTER ELEMENTARY SCHOOL #8

MONTGOMERY COUNTY PUBLIC SCHOOLS

SHEET TITLE:
SOIL EROSION, SEDIMENT CONTROL AND STORMWATER MANAGEMENT PLAN

PROJECT NO: 19007
DATE: 12/04/20
SCALE: AS NOTED
SHEET NO: C4.32
Sheet 24 of 28

I:\13111\dwg\SD_21_01.dwg, C4.32 STORM DRAIN PROFILES AND SCHEDULES SC024SDPROFILE, 12/10/2020 6:57:23 PM, Copyright © 2017 Macris, Hendricks & Glascock, P.A.